6. SWITCHED ACCESS SERVICE

Alphabetical By SUBJECT **PAGE** (N)

500 Service 6-102.1
800 Service 6-93
900 Service 6-97
950 on FGD Service 6-133

Acceptance Testing 6-38
Access Tandem Trunk Port 6-18
Administrative Changes 6-174
Alternate Traffic Routing 6-121
Application of Rates and Charges .....
  500 Service 6-203
  800 Service 6-192
  900 Service 6-193
  Additional CICs 6-178.1
  Administrative Changes 6-174
  All Other Changes (Service Rearrangements) 6-176
  Alternate Traffic Routing 6-178
  BSE 6-197
  Carrier Identification Parameter (CIP) 6-203
  Change of Interface Group 6-204
  Change of Service Type 6-205.1
  Clear Channel Capability 6-199
  Dedicated Network Access Link 6-198
  Direct-Trunked Transport 6-201
  Entrance Facility 6-201
  Extension Service 6-219
  Feature Groups to BSAs 6-179
  Information Surcharge 6-199
  Installation of Optional Features and BSEs 6-173
  Installation of Service 6-172
  Line and Trunk Installation ..... 6-172 (N)

6. SWITCHED ACCESS SERVICE

Alphabetical By SUBJECT **PAGE** (N)

Application of Rates and Charges (Cont'd)

Message Unit Credit 6-219
Minimum Monthly Charge 6-203.1
Moves 6-207
Multiple POTs Tandem Sectorization 6-194
Multiplexing, EF and DTT 6-202.1
Nonrecurring Charges 6-171
Optional Features 6-173
Premium and Transitional Rates 6-187
Rollover 6-186
SHARP 6-195
SS7 Rearrangement 6-179
Service Rearrangements 6-173
Service Type Upgrade 6-206
Switched Data Service (SDS) 6-195
Tandem Routing to Direct Routing 6-181
Tandem Switched Transport 6-202
WATS 6-177
Assumed Minutes Of Use 6-212
Automatic Number Identification (ANI) 6-116

Basic Service Arrangement (BSA) 6-2

Carrier Identification Parameter (CIP) 6-143.1
Circuit Switched Lineside (CSL) 6-67
Circuit Switched Trunkside-Option 1 (CST1) 6-74
Circuit Switched Trunkside-Option 2 (CST2) 6-79
Circuit Switched Trunkside-Option 3 (CST3) 6-84
Clear Channel Capability 6-144
Commitment Program 6-224.9

DS1 Record Assignment 6-161
Dedicated Network Access Link 6-100
Density Zone Pricing 6-224.1
Design and Traffic Routing ..... 6-161 (N)

6. SWITCHED ACCESS SERVICE

Alphabetical By SUBJECT **PAGE** (N)

Design Blocking Probability 6-164
Design Layout Report 6-38
Determination of Number of Transmission Paths 6-163
Direct-Inward Dial (DID) 6-91
Direct-Trunked Transport 6-16

End Office Dedicated Trunk Port 6-37
End Office Shared Port 6-37
Entrance Facility..... 6-15
Extension Service..... 6-219

Facilities for Switched Access Transport..... 6-19
Feature Group A..... 6-43
Feature Group B..... 6-50
Feature Group C..... 6-54
Feature Group D..... 6-60
Flexible ANI..... 6-118

General Description..... 6-1

Hubbing 6-20

Information Surcharge..... 6-199
Interface Groups..... 6-21

Local Switching 6-35

Measuring Access Minutes 6-209
Message Unit Credit..... 6-219
Mileage Measurement..... 6-220
Multiple POTs Tandem Sectorization (MPTS)..... 6-29
Multiplexing, Common Transport 6-18
Multiplexing for EF and DTT Facilities 6-32

Network Management..... 6-160
Nonrecurring Charge Reduction 6-224.8.1
Nonrecurring Charges ..... 6-171 (N)

6. SWITCHED ACCESS SERVICE

Alphabetical By SUBJECT **PAGE** (N)

ONA Generic Names 6-40
Obligations of the Company 6-160
Obligations of the Customer 6-168
Operator Trunk 6-145
Optional Features and BSEs 6-103
Ordering Options and Conditions 6-39

Partnership Program 6-224.18
Percent Direct Routed Factor (PDR) 6-224
Pricing Plan Shared Use Regulations 6-224.5
Pricing Plans 6-224.1
Provision of Switched Access 6-42

Rate Applications (See Applications of Rates)
Rate Categories 6-7
Rates and Charges 6-225
  500 Service 6-255
  800 Service 6-259
  900 Service 6-257
  Alternate Traffic Routing 6-245
  Automatic Number Identification (ANI) 6-242
  BSE Order Charge 6-240
  Carrier Identification Parameter (CIP) 6-255
  Clear Channel Capability (BSE) 6-250
  Dedicated Network Access Link (DNAL) 6-238
  Direct-Trunked Transport (DTT) 6-226
  End Office Dedicated Trunk Port 6-239.1
  End Office Shared Port 6-239.1
  Entrance Facility 6-225
  Flex ANI 6-242
  Information Surcharge 6-258
  Line or Trunk Installation 6-228
  Local Switching ..... 6-239 (N)

6. SWITCHED ACCESS SERVICE

Alphabetical By SUBJECT **PAGE** (N)

Rates and Charges (Cont'd)

Message Unit Credit	6-256.1
Moves	6-229
Multiple POTs Tandem Sectorization (MPTS)	6-234
Multiplexing, Common Transport	6-227
Multiplexing, EF & DTT	6-237
Optional Features	6-234
Rollover Charges	6-233.1
SS7	6-231
Self Healing Alternate Route Protection (SHARP)	6-235
Service Rearrangements	6-231
Switched Data Service	6-258
Switched Transport	6-225
Tandem Switched Transport (TST)	6-227
Rate Regulations	6-171
Report Requirements	6-169
SS7 Out of Band Signaling Optional Feature	6-142
Self Healing Alternate Route Protection (SHARP)	6-28
Service Class Routing	6-121
Special Facilities Routing	6-38
Special High Voltage Protective Apparatus	6-39
Standard Transmission Parameter Limits	6-150
Switched Access Service Arrangements	6-2
Switched Data Service (SDS)	6-102
Switched Transport	6-14
Switched Transport Commitment Program	6-224.16
Switched Transport Pricing Plan Termination Liability	6-224.6
Switched Transport Pricing Plan Waiver Policy	6-224.7
Tandem Signaling Information Option	6-34
Tandem Switched Transport	6-17
Technical Specifications	6-149
Termination Liability	6-224.6
Traffic Types	6-4
Trunk Group Measurement Reports	6-162
Voice Band Data Transmission Parameter Limits	6-156
WATS	6-124
Waiver Policy	6-224.7 (N)

6. SWITCHED ACCESS SERVICE

6.1 GENERAL

Switched Access Service, which is available to customers for their use in furnishing their services to end users, provides a two-point electrical communications path between a customer's premises and an end user's premises. It provides for the use of terminating, switching, transport facilities and common subscriber plant of the Telephone Company. Switched Access Service provides for the ability to originate calls from an end user's premises to a customer's premises, and to terminate calls from a customer's premises to an end user's premises in the LATA where it is provided. Specific references to material describing the elements of Switched Access Service are provided in 6.1.1, following.

Rates and charges for Switched Access Service are set forth in 6.8 following. The application of rates for Switched Access Service is described in 6.7, following. Rates and charges for services other than Switched Access Service, e.g., a customer's interLATA toll message service, may also be applicable when Switched Access Service is used in conjunction with these other services. Descriptions of such applicability are provided in 6.2.1.A.8., 6.2.1.B.5., 6.2.2.A.7., 6.2.2.B.4., 6.2.3.A.7., 6.2.4.A.5., 6.2.5.A.8., 6.2.5.B.4., 6.2.6.A.1.g., 6.2.6.A.2.d., 6.2.6.B.1.g., 6.2.6.C.1.e., 6.7.8 and 6.7.10, following. Finally, a credit is applied against Lineside Switched Access Service charges as described in 6.7.9, following.

6. SWITCHED ACCESS SERVICE

6.1 GENERAL (Cont'd)

6.1.1 SWITCHED ACCESS SERVICE ARRANGEMENTS AND MANNER OF PROVISION

Switched Access Service is provided by the following Lineside Access or Trunkside Access Basic Serving Arrangements (BSAs) and Feature Groups.

LINESIDE ACCESS

BUNDLED	UNBUNDLED
Feature Group A	Circuit Switched Lineside

TRUNKSIDE ACCESS

BUNDLED	UNBUNDLED
Feature Group B	Circuit Switched Trunkside
Feature Group C	Option 1
Feature Group D	Option 2
	Option 3

The names of the BSAs are identified in Bell Operating Companies ONA Special Report #5, Issue 2.1 updated July 31, 1991, as Circuit Switched Lineside BSA and Circuit Switched Trunkside BSA.

Circuit Switched Lineside (CSL) and Circuit Switched Trunkside (CST) are provided as unbundled service arrangements and are available with various Basic Service Elements (BSEs) and optional features. CST Access is available in three different serving arrangements, CST-Option 1 (CST1), CST-Option 2 (CST2) and CST-Option 3 (CST3)[1]. CSL and CST BSAs and options are provided as set forth in 6.2.5 and 6.2.6, following.

[1] CST1, CST2 and CST3 are the unbundled service arrangements that are similar to FGs B, C and D.

6. SWITCHED ACCESS SERVICE

6.1 GENERAL

6.1.1 SWITCHED ACCESS SERVICE ARRANGEMENTS AND MANNER OF PROVISION (Cont'd)

Feature Groups are available with various BSEs and optional features. The Feature Groups are provided as set forth in 6.2.1, 6.2.2, 6.2.3 and 6.2.4, following.

No customer can have Feature Group arrangements and unbundled BSAs at the same time in the same LATA.

Nonrecurring charges will be applied as set forth in 6.7.1., following. (T)

DID Switched Access Service is available on a bundled or unbundled basis and is described in 6.2.7, following. 800 DB Access Service, 900 Access Service, Dedicated Network Access Links (DNALs), Switched Data Services and 500 Access Service are available and are described in 6.2.8, 6.2.9, 6.2.10, 6.2.11 and 6.2.12, following.

The BSAs and Feature Groups are differentiated by their technical characteristics, e.g., lineside vs. trunkside connection at the Company entry switch, and the manner in which an end user accesses them in originating calling, e.g., with or without an access code.

Lineside Access (CSL and FGA) is furnished on a per-line basis. Trunkside Access (CST and FGs B, C and D) and *DID* Switched Access is furnished on a per-trunk basis. (C)

Trunks are differentiated by type and directionality of traffic carried over a Switched Access Service arrangement. Differentiation among traffic types is necessary for the Company to design Switched Access Service properly to meet the traffic carrying capacity requirement of the customer. (C)

6. SWITCHED ACCESS SERVICE

6.1 GENERAL

6.1.1 SWITCHED ACCESS SERVICE ARRANGEMENTS AND MANNER OF PROVISION (Cont'd)

There are seven major traffic types. These are Originating, Terminating, Voice DA, *SWITCHNET 56*, CCC Originating, CCC Terminating and Operator Assistance Service. (T) (C) (C)

- Originating traffic type represents access capacity within a LATA for carrying traffic from the end user to the customer.

- Terminating traffic type represents access capacity within a LATA for carrying traffic from the customer to the end user.

- Voice DA traffic type represents access capacity within a LATA for carrying Voice DA traffic from the customer to a Voice DA location.

- *SWITCHNET 56* traffic type represents access capacity within a LATA for carrying digital traffic at speeds up to 56 kbps between the customer and the end user.

- CCC Originating traffic type represents access capacity within a LATA for carrying circuit switched data and/or circuit switched voice traffic on CST3 or FGD Service equipped with clear channel capability from the end user to the customer.

- CCC Terminating represents access capacity within a LATA for carrying circuit switched data and/or circuit switched voice traffic on CST3 or FGD Service equipped with Clear Channel Capability from the customer to the end user.

- Operator Assistance Service traffic type represents access capacity within a LATA for carrying operator assistance traffic to or from the customer's premises, to or from a Company-designated OAS tandem location. (N) | (N)

6. SWITCHED ACCESS SERVICE

6.1 GENERAL

6.1.1 SWITCHED ACCESS SERVICE ARRANGEMENTS AND MANNER OF PROVISION (Cont'd)

When ordering capacity for Trunkside Switched Access, the customer must, at a minimum, specify such access capacity in terms of the following: (T)

- Originating and/or Terminating traffic type,
- *SWITCHNET 56* traffic type,
- CCC Originating traffic type and/or CCC Terminating traffic type,
- Voice DA traffic type is used for ordering Voice DA Access Service as set forth in Section 9, following, and (T)
- Operator Assistance Service traffic type. (N)
- Additionally, when ordering capacity for 500 Access Service, 800 DB Access Service and/or 900 Access Service, the customer must specify 500, 8XX and/or 900 traffic type. (T)

Because some customers will wish to segregate their originating CST2, CST3, FGC, FGD, 500 Access Service, 800 DB Access Service, or 900 Access Service traffic further into separate trunk groups, the Originating traffic type and CCC Originating traffic type are further categorized into Domestic, 500, 8XX, 900, Operator and IDDD as described following: (T)

- Domestic traffic type represents access capacity for carrying only domestic traffic other than 500, 8XX, 900 and Operator traffic. (T) (T)
- IDDD traffic type represents access capacity for carrying only international traffic. (T) (T)
- 500, 8XX, 900 and Operator traffic type represents access capacity for carrying, respectively, only 500, 8XX, 900 or Operator traffic. (T)

When such a customer wishes to segregate traffic as described above, the customer must specify Domestic, 500, 8XX, 900, Operator or IDDD traffic type. (T)

6. SWITCHED ACCESS SERVICE

6.1 GENERAL

6.1.1 SWITCHED ACCESS SERVICE ARRANGEMENTS AND MANNER OF PROVISION (Cont'd)

When Switched Access Service connects to Expanded Interconnection-Collocation (EIC) Service as set forth in Section 21, following, the Switched Access Service is provided at a DS1 or DS3 capacity connecting to an EIC Channel Termination DS1 or DS3. A Switched Transport Entrance Facility is not required. The designated serving wire center for Switched Access Services connecting to EIC Service is determined as follows:

(D-x)
|
(D-x)

- The wire center where the Telephone Company-designated point of interconnection exists for Virtual EIC will be the designated Switched Transport serving wire center and the customer point of interconnection for Switched Access Services.

(x) Issued under the authority of Special Permission No. 96-612.

6. SWITCHED ACCESS SERVICE

6.1 GENERAL (Cont'd)

6.1.2 RATE CATEGORIES

There are three rate categories which apply to Switched Access Service (see exception below for DNAL): (C)

- Switched Transport (described in 6.1.2.A., following)
- Local Switching (described in 6.1.2.B., following)

(D)

- Common Line (described in Sections 3 and 4, preceding)

The DNAL (described in 6.2.10, following) is a Switched Transport flat-rated service and is not subject to the Local Switching or Common Line rate categories above. (C)

In addition to the three rate categories, there are rate elements applicable to certain Switched Access services: (C)

- 500 Access Service Charges, applicable to 500 Access Service provided in conjunction with CST1, CST2, CST3, Feature Group B, C or D. The description and application of these charges are set forth in 6.7.1, following.

- 800 DB Access Service Charges, applicable to 800 DB Access Service provided in conjunction with Trunkside Access. The description and application of these charges are set forth in 6.7.1, following.

- 900 Access Service Charges, applicable to 900 Access Service provided in conjunction with CST2, CST3, Feature Groups C, D and 900 Access Service (FGB-like). The description and application of these charges are set forth in 6.7.1, following.

- Dedicated Network Access Link Charges, applicable to DNAL service, provided in conjunction with CSL or FGA access service provided with the Make Busy Arrangement, Message Delivery Service or Customer Identification-Bulk BSEs. The description and application of these charges are set forth in 6.7.1, following.

- Information Surcharge, applicable to all Interstate Switched Access Service minutes of use. The description and application of this rate element is set forth in 6.7.1.N., following.

6. SWITCHED ACCESS SERVICE

6.1 GENERAL
6.1.2 RATE CATEGORIES (Cont'd)

The following diagrams depict possible serving arrangements and components of Switched Access Service and the manner in which the components are combined to provide a complete access service. The following diagrams are not intended to depict all serving arrangements available. Common line rate elements are described in Section 3 and Section 4, preceding.

EXAMPLE 1

Switched Access Service Ordered with Tandem Routing

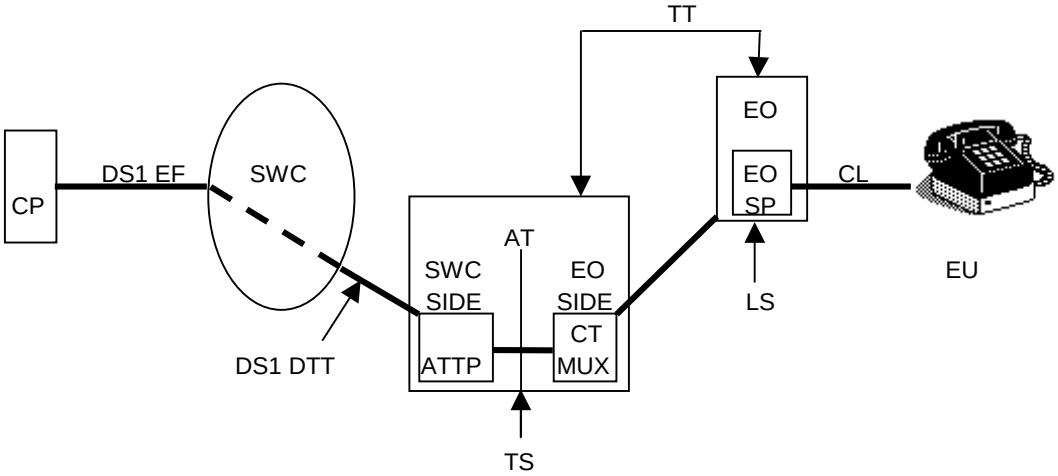

(T)
(T)
(C)
(T)
(T)

AT	-	Access Tandem
ATTP	-	Access Tandem Trunk Port
CL	-	Common Line
CP	-	Customer's Premises
CT MUX	-	Common Transport Multiplexing
DTT	-	Direct Trunked Transport
EF	-	Entrance Facility
EO	-	End Office
EO SP	-	End Office Shared Port
EU	-	End User
LS	-	Local Switching
SWC	-	Serving Wire Center
TS	-	Tandem Switching
TT	-	Tandem Transmission

(D)

6. SWITCHED ACCESS SERVICE

6.1 GENERAL
6.1.2 RATE CATEGORIES (Cont'd)

EXAMPLE 2

Switched Access Service Ordered with DS1 EF and DS1 DTT Facility

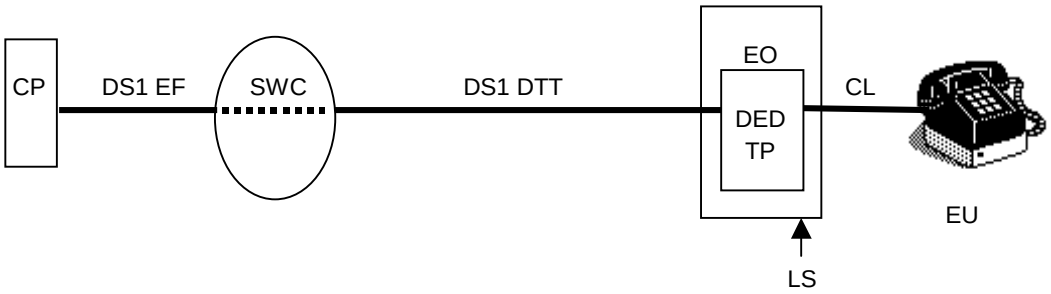

(T)
(T)
(C)

CL	-	Common Line
CP	-	Customer's Premises
DED TP	-	Dedicated Trunk Port
DTT	-	Direct Trunked Transport
EF	-	Entrance Facility
EO	-	End Office
EU	-	End Users
LS	-	Local Switching
SWC	-	Serving Wire Center

(D)

6. SWITCHED ACCESS SERVICE

6.1 GENERAL
6.1.2 RATE CATEGORIES (Cont'd)

EXAMPLE 3

Switched Access Service Ordered with DS3 EF for DTT and TST

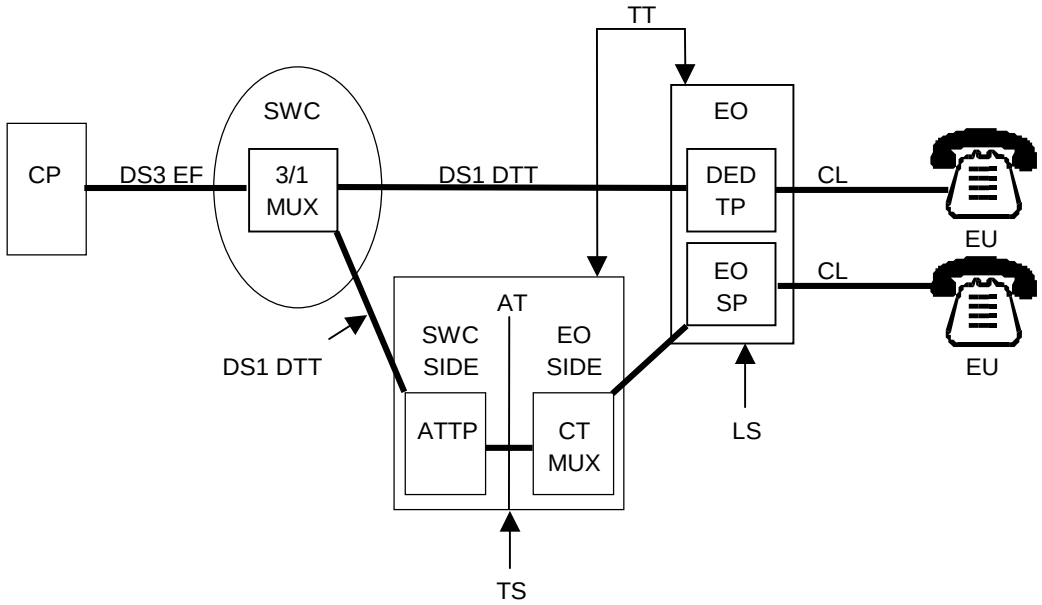

(T)
(T)
(C)
(T)
(T)

AT	-	Access Tandem
ATTP	-	Access Tandem Trunk Port
CL	-	Common Line
CP	-	Customer's Premises
CT MUX	-	Common Transport Multiplexing
DED TP	-	Dedicated Trunk Port
DTT	-	Direct Trunked Transport
EF	-	Entrance Facility
EO	-	End Office
EO SP	-	End Office Shared Port
EU	-	End User
LS	-	Local Switching
MUX	-	EF Multiplexer
SWC	-	Serving Wire Center
TS	-	Tandem Switching
TT	-	Tandem Transmission

(D)

6. SWITCHED ACCESS SERVICE

6.1 GENERAL
6.1.2 RATE CATEGORIES (Cont'd)

EXAMPLE 4

Reserved for Future Use (T)

(D)

(D)

6. SWITCHED ACCESS SERVICE

6.1 GENERAL
6.1.2 RATE CATEGORIES (Cont'd)

EXAMPLE 5

Switched Access Service Ordered with DS3 EF and DS3 TT Facility to an End Office

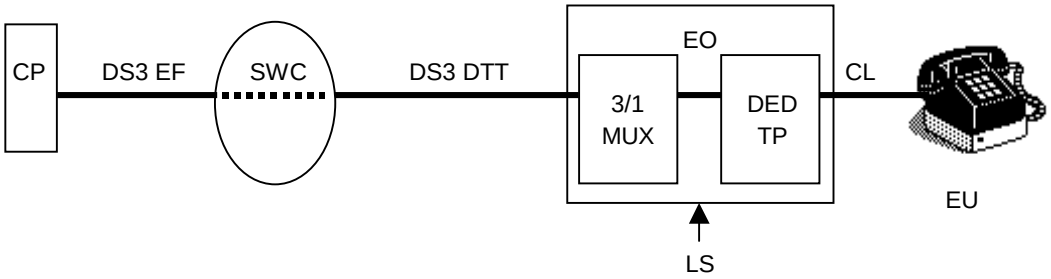

(T)
(T)
(C)

CL	-	Common Line
CP	-	Customer's Premises
DED TP	-	Dedicated Trunk Port
DTT	-	Direct Trunked Transport
EF	-	Entrance Facility
EO	-	End Office
EU	-	End Users
LS	-	Local Switching
MUX	-	DTT Multiplexer
SWC	-	Serving Wire Center

(D)

6. SWITCHED ACCESS SERVICE

6.1 GENERAL
6.1.2 RATE CATEGORIES (Cont'd)

EXAMPLE 6

Switched Access Service Ordered to a Company Hub

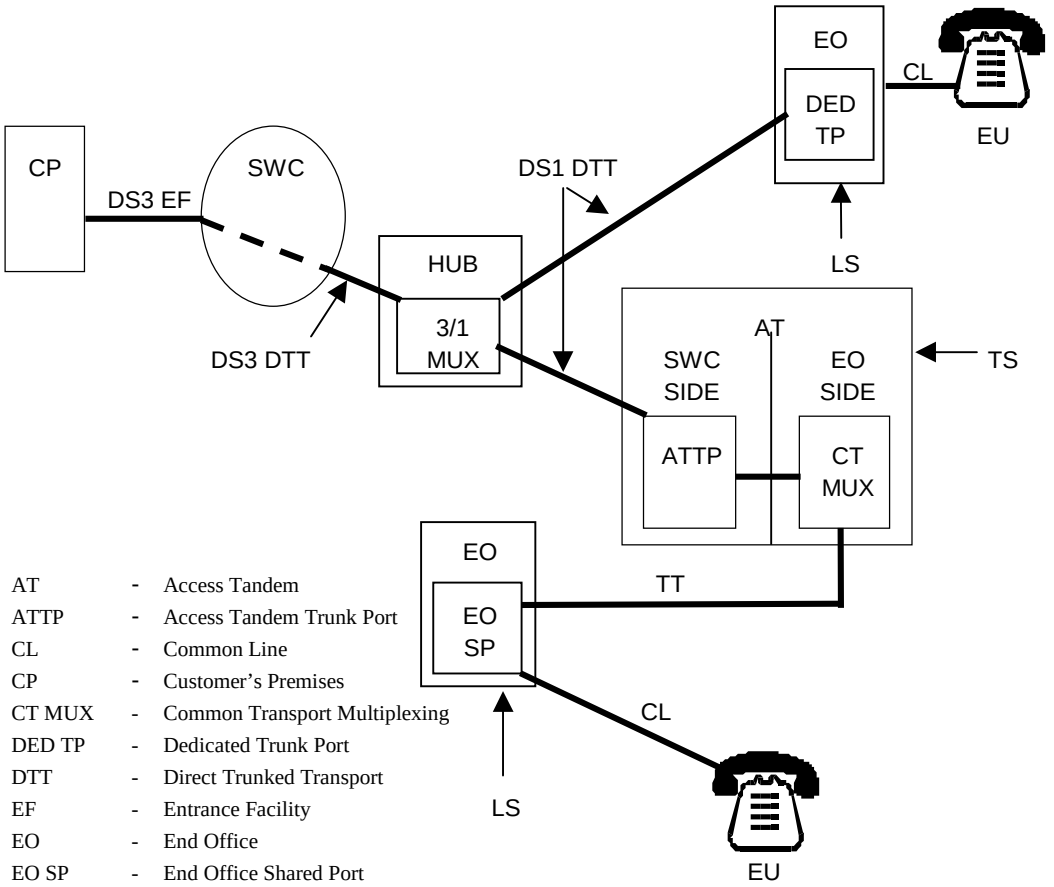

AT	-	Access Tandem
ATTP	-	Access Tandem Trunk Port
CL	-	Common Line
CP	-	Customer's Premises
CT MUX	-	Common Transport Multiplexing
DED TP	-	Dedicated Trunk Port
DTT	-	Direct Trunked Transport
EF	-	Entrance Facility
EO	-	End Office
EO SP	-	End Office Shared Port
EU	-	End User
HUB	-	HUB Location
LS	-	Local Switching
MUX	-	EF Multiplexer
SWC	-	Serving Wire Center
TS	-	Tandem Switching
TT	-	Tandem Transmission

(T)
(T)
(C)
(T)
(T)
(T)
(C)
(D)

6. SWITCHED ACCESS SERVICE

6.1 GENERAL
6.1.2 RATE CATEGORIES (Cont'd)

EXAMPLE 7

Reserved for Future Use (T)

(D)

(D)

6. SWITCHED ACCESS SERVICE

6.1 GENERAL
6.1.2 RATE CATEGORIES (Cont'd)

EXAMPLE 8

Switched Access Service Connected to Expanded Interconnection-Collocation

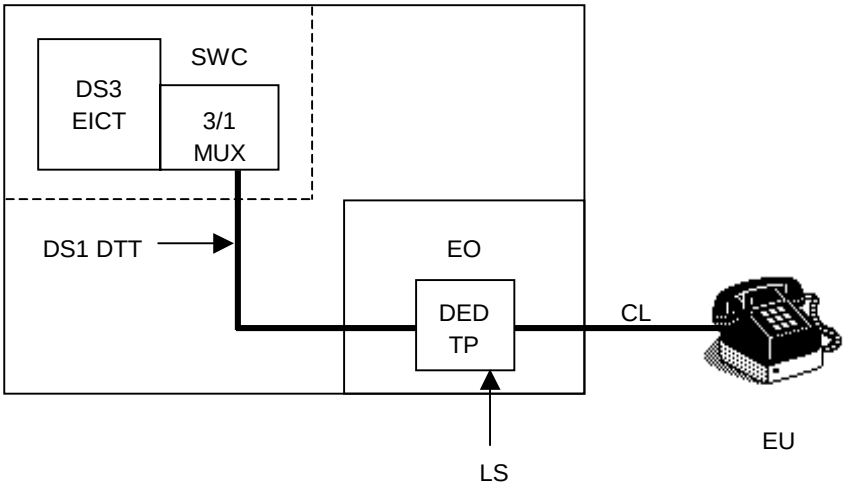

(T)
(T)
(C)

CL	-	Common Line
DED TP	-	Dedicated Trunk Port
DTT	-	Direct Trunked Transport
EICT	-	Expanded Interconnection-Collocation Channel Term
EO	-	End Office
EU	-	End User
LS	-	Local Switching
MUX	-	EF Multiplexer
SWC	-	Serving Wire Center

(D)

6. SWITCHED ACCESS SERVICE

6.1 GENERAL
6.1.2 RATE CATEGORIES (Cont'd)

EXAMPLE 9

Switched Access Service Connected to Expanded Interconnection-Collocation

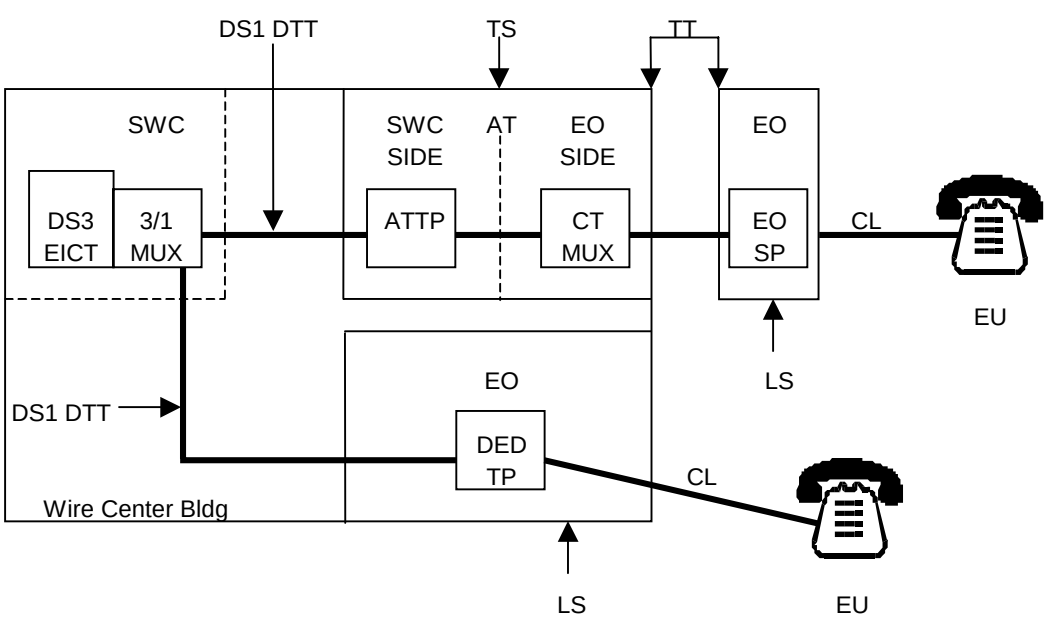

(T)
(T)
(C)
(T)
(T)
(C)

AT	-	Access Tandem
ATTP	-	Access Tandem Trunk Port
CL	-	Common Line
CT MUX	-	Common Transport Multiplexing
DED TP	-	Dedicated Trunk Port
DTT	-	Direct Trunked Transport
EICT	-	Expanded Interconnection-Collocation Channel Term
EO	-	End Office
EO SP	-	End Office Shared Port
EU	-	End User
LS	-	Local Switching
MUX	-	SWC Multiplexer
SWC	-	Serving Wire Center
TS	-	Tandem Switching
TT	-	Tandem Transmission

(D)

6. SWITCHED ACCESS SERVICE

6.1 GENERAL
6.1.2 RATE CATEGORIES (Cont'd)

EXAMPLE 10

Private Line Service and Switched Access Ordered to a Company Hub

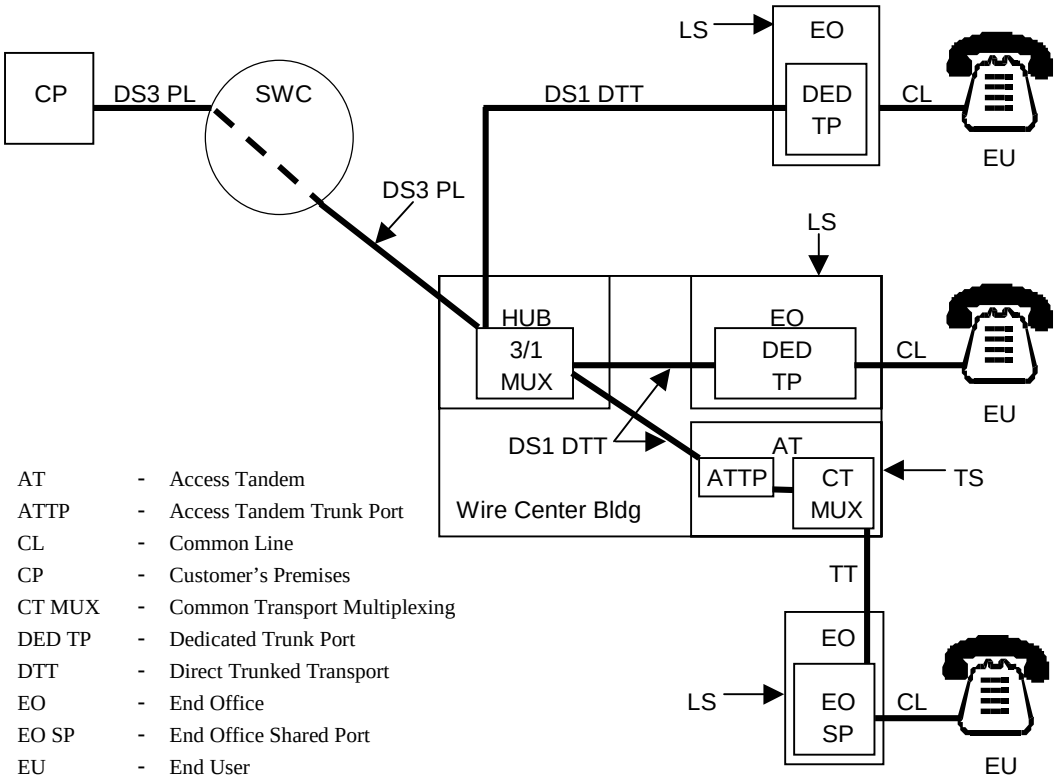

(C)
(T)
(T)
(C)
(T)
(T)
(C)
(T)
(T)
(D)

AT	-	Access Tandem
ATTP	-	Access Tandem Trunk Port
CL	-	Common Line
CP	-	Customer's Premises
CT MUX	-	Common Transport Multiplexing
DED TP	-	Dedicated Trunk Port
DTT	-	Direct Trunked Transport
EO	-	End Office
EO SP	-	End Office Shared Port
EU	-	End User
HUB	-	HUB Location
LS	-	Local Switching
MUX	-	EF Multiplexer
PL	-	Private Line
SWC	-	Serving Wire Center
TS	-	Tandem Switching
TT	-	Tandem Transmission

6. SWITCHED ACCESS SERVICE

6.1 GENERAL
6.1.2 RATE CATEGORIES (Cont'd)

A. Switched Transport

1. General Description

The Switched Transport rate category provides the transmission facilities between the customer's premises and the end office switch(es) where the customer's traffic is switched to originate or terminate its communications.

Switched Transport is a two-way voice-frequency transmission path composed of an Entrance Facility (EF) and a Direct-Trunked Transport (DTT) facility for direct (C)
routed traffic. For tandem routed traffic, the Switched Transport is composed of an EF, a DTT to an access tandem and Tandem-Switched Transport (TST) from the access tandem to the subtending end offices. The transmission path permits the transport of calls in the originating direction (from the end user's end office (C)
switch to the customer's premises) and in the terminating direction (from the customer's premises to the end office switch), but not simultaneously. The voice-frequency transmission path may be comprised of any form or configuration of plant capable of and typically used in the telecommunications industry for the transmission of voice and associated telephone signals within the frequency bandwidth of approximately 300 to 3000 Hz.

When a Switched Access Service connects to EIC Service as set forth in Section 21, following, the Switched Access Service designated serving wire center and customer point of interconnection are defined as set forth in 6.1.1, preceding.

The Company will work cooperatively with the customer in determining (1) the (T)
EF, (2) whether the service is to be directly routed or routed through an access tandem switch, (3) the directionality of the service and (4) hubbing arrangements. Switched Transport optional features are provided as set forth in 4., following.

6. SWITCHED ACCESS SERVICE

6.1 GENERAL
6.1.2 RATE CATEGORIES

A.1. (Cont'd)

Switched Transport is provided at the rates and charges set forth in 6.8, following. The application of these rates with respect to the different types of service is as set forth in 6.7.1, following. (C)

Switched Access is ordered under the access order provisions as set forth in Section 5, preceding. Design and traffic routing of Switched Access Service is described in 6.5.2, following.

Switched Transport is composed of an Entrance Facility (EF) rate category, as described in a., following, a Direct-Trunked Transport (DTT) rate category, as described in b., following and a Tandem-Switched Transport (TST) rate category, as described in c., following.

a. Switched Transport EF Rate Category

An EF provides the communication path between a customer's premises and the Telephone Company serving wire center (SWC) of that premises for the sole use of the customer. The EF rate category is composed of a Voice Grade rate, a DS1 rate or a DS3 rate. An EF is provided even if the customer's premises and the SWC are located in the same building. The types of facilities available for Entrance Facilities are described in 2., following.

The EF rate category does not apply when Switched Access Service connects to EIC Service as set forth in Section 21, following.

6. SWITCHED ACCESS SERVICE

6.1 GENERAL
6.1.2 RATE CATEGORIES

A.1. (Cont'd)

b. Switched Transport DTT Rate Category

DTT provides the transmission path on circuits dedicated to the use of a single customer between: (C)

- the customer's SWC and an end office, or
- the customer's SWC and an access tandem, or
- the customer's SWC and a Company Hub where multiplexing functions are performed, or
- a Company Hub and an end office, or
- a Company Hub and an access tandem.

(D)

(D)

The DTT rate category is composed of a monthly fixed rate and a monthly per-mile rate based on the facility provided, (i.e., Voice Grade, DS1 or DS3). The fixed rate provides the circuit equipment at the ends of the transmission paths. The per-mile rate provides the transmission facilities, including intermediate transmission circuit equipment, between the end points of the circuit. The DTT rate is the sum of the fixed rate and the per-mile rate. For purposes of determining the per-mile rate, mileage will be measured as airline mileage using the V & H coordinates method. Mileage measurement rules are set forth in 6.7.11, following. The types of facilities available for DTT are described in 2., following.

6. SWITCHED ACCESS SERVICE

6.1 GENERAL
6.1.2 RATE CATEGORIES

A.1. (Cont'd)

c. Switched Transport TST Rate Category

TST provides the transmission facilities between an access tandem and end offices subtending that tandem utilizing tandem switching functions. TST is not available from or to a Company Hub. TST consists of circuits used in common by multiple customers from the access tandem to an end office. For TST, the Company will determine the type of facilities to the end office(s) based on the customer's order for service on a per-trunk basis. (C) (C) (C)

(D) (D)

The TST rate category is composed of the rate elements set forth in (1) through (4), following. Rates and charges are set forth in 6.8, following.

(1) Tandem Transmission

Tandem Transmission is composed of a fixed per-MOU rate and per-mile/per-MOU rate. The fixed rate provides for the circuit equipment at the end of the interoffice transmission paths. The per-mile rate provides for the transmission facilities, including intermediate transmission circuit equipment between the end points of the interoffice circuit. For purposes of determining the per-mile rate, mileage will be measured as airline mileage using the V & H coordinates method. Mileage measurement rules are set forth in 6.7.11, following. (D) (D)

6. SWITCHED ACCESS SERVICE

6.1 GENERAL
6.1.2 RATE CATEGORIES

A.1.c. (Cont'd)

(2) Tandem Switching (T)

Tandem Switching is a per-MOU rate assessed for utilizing tandem switching functions when tandem routing is requested for trunkside services. Tandem Switching is not assessed to FGA or CSL services. (T)

(3) Access Tandem Trunk Port (N)

An access tandem trunk port (ATTP) is provided for each trunk terminated on the serving wire center side of the access tandem when the customer has requested tandem routing. The ATTP rate is assessed monthly per Feature Group or BSA trunk (excludes FGA and CSL).

(4) Common Transport Multiplexing

Common transport multiplexing equipment is utilized in the end office side of the access tandem when common transport is provided between the access tandem and the subtending end offices. This rate is assessed on a per-MOU basis. (Multiplexing equipment associated with a DTT facility ordered to the access tandem is provisioned on the SWC side of the access tandem. Multiplexing rates for EF and DTT facilities are described in A.4., following, and if assessed, are in addition to the common transport multiplexing rates.) (N)

Certain material previously found on this page can now be found on Page 6-19.

6. SWITCHED ACCESS SERVICE

6.1 GENERAL
6.1.2 RATE CATEGORIES

A. Switched Transport (Cont'd)

2. Switched Transport Facilities

Customers requesting Lineside or Trunkside Switched Access service shall specify the type of Entrance Facility (Voice Grade, DS1 or DS3) between the customer's premises and the SWC. The customer shall also specify if tandem routing or direct routing will be utilized for trunkside services. If tandem routing is desired, the customer must specify the type of DTT facility (Voice Grade, DS1 or DS3) to be utilized from the SWC to the access tandem and the Company will determine the type of facilities (i.e., common transport) to the subtending end offices. Tandem routing is not available for Lineside Switched Access Service. If direct routing is requested, the customer shall specify the type of DTT facility (Voice Grade, DS1 or DS3) to be utilized from the SWC to the end office. (C)

There are three types of facilities, Voice Grade, DS1 or DS3, available to the customer for Entrance Facilities and DTT facilities for Lineside or Trunkside Switched Access Service. Following is a brief description of each type of facility. Each type has its own characteristics and is available with EF and DTT multiplexing options as set forth in 4., following.

a. Voice Grade Facility

Voice Grade facilities are available for Entrance Facilities and for DTT facilities. A Voice Grade facility is an electrical communications path which provides voice-frequency transmission in the nominal frequency range of 300 to 3000 Hz and may be terminated two-wire or four-wire. Compatible Interface Groups are described in 3., following.

b. DS1 Facility

DS1 facilities are available for Entrance Facilities and for DTT facilities. A DS1 facility is capable of transmitting electrical signals at a nominal 1.544 Mbps, with the capability to channelize up to 24 voice-frequency transmission paths. Compatible Interface Groups are described in 3., following.

c. DS3 Facility

DS3 facilities are available for Entrance Facilities and DTT facilities. A DS3 facility is capable of transmitting electrical signals at a nominal 44.736 Mbps, with the capability to channelize up to 672 voice-frequency transmission paths. Compatible Interface Groups are described in 3., following.

6. SWITCHED ACCESS SERVICE

6.1 GENERAL
6.1.2 RATE CATEGORIES

A.2. (Cont'd)

d. Hubbing

Hubbing arrangements requested from the SWC to a hub location, or from one hub location to a different hub location, shall be ordered out of this section as DTT for Switched Access only. Hubbing arrangements ordered from Section 7 for the provision of Shared Use services can be utilized for both PLTS and Switched Access Service.

When the SWC is in the same wire center building as an end office, access tandem and/or hub, the customer must order DTT from the SWC as set forth in A.1. and 2., preceding. A multiplexing function performed in the SWC for an EF is not a hubbing arrangement. (C)

A hub is a Company designated wire center, other than the SWC, at which multiplexing functions are performed. Hubbing allows the customer to terminate a DTT facility to a hub so that the facility can be de-multiplexed to a lower capacity and the lower capacity DTT facility is then routed to an access tandem, end office or another hub. When the customer requests DTT from the SWC to a hub and facilities from the hub to an access tandem, the customer must order DTT from the hub to the access tandem and TST from the access tandem to end offices subtending that tandem.

Multiplexing functions for EF and DTT facilities are described in 4., following. Hub locations and the types of multiplexing available at each location for DS1 facilities are specified in the NECA Tariff F.C.C. No. 4. For DS3 facilities, the Company will work cooperatively with the customer to provide the desired hubbing arrangements.

6. SWITCHED ACCESS SERVICE

6.1 GENERAL
6.1.2 RATE CATEGORIES

A. Switched Transport (Cont'd)

3. Interface Groups

Four Interface Groups are provided for terminating Switched Transport at the customer's premises. Each Interface Group provides a specified premises interface (e.g., two-wire, four-wire, DS1, etc.). Where transmission facilities permit, the individual transmission path between the customer's premises and the first point of switching may, at the option of the customer, be provided with optional features as set forth in 4., following.

As a result of the customer's access order and the type of Company transport facilities serving the customer's premises, the need for signaling conversions or two-wire to four-wire conversions, or the need to terminate digital or high frequency facilities in channel bank equipment, may require that Company equipment be placed at the customer's premises. For example, if a voice-frequency interface is ordered by the customer and the Company facilities serving the customer's premises are digital, then Company channel bank equipment must be placed at the customer's premises in order to provide the voice-frequency interface ordered by the customer. (T) (T) (T)

Interface Group Transmission Specifications and Data Transmission Parameters are delineated in Technical Reference GR-334-CORE. (T)

6. SWITCHED ACCESS SERVICE

6.1 GENERAL
6.1.2 RATE CATEGORIES

A.3. (Cont'd)

Only certain Network Channel Interface codes (NCI) are available at the customer's premises. The NCI codes associated with the Interface Groups may vary among different types of service based on the technical requirements. The various premises interfaces which are available with the Interface Groups, and the types of service with which they may be used, are set forth in e., following.

Based upon the Interface Group chosen by the customer, EF and DTT multiplexing arrangements may be required. Multiplexing arrangements are described in 4., following. (T)

When Switched Access Services are ordered in conjunction with Private Line Transport DS3 Service which is provisioned with an Electrical capacity of two or greater or any Optical Interface ordered and provided from Section 7, following, the common interface will be provisioned under the rules and regulations for Shared Use between Private Line Transport and Switched Access Services referenced in 2.7, preceding. The rate for DS3 EF Electrical capacity of two or greater or any Optical Interface is for the billing of Shared Use only. Switched Access Services rates and charges as set forth in 6.8, following will apply for each channel of the Shared Use facility that is used to provide Switched Access Service. Technical specifications are delineated in U S WEST Communications Technical Publication PUB 77324.

When Interface Groups 1, 2, 6 or 9 are associated with CST3 or FGD Service with SS7 out of band signaling, no signaling will be done via the message channel.

When *SWITCHNET 56* Service is ordered in conjunction with CST3 or FGD, it requires the use of a separate trunk group equipped with Interface Group 6. This service allows a customer to establish a connection between the customer's premises and a suitably equipped end user premises over facilities capable of transmitting digital data at 56 kbps.

6. SWITCHED ACCESS SERVICE

6.1 GENERAL
6.1.2 RATE CATEGORIES

A.3. (Cont'd)

a. Interface Group 1

Interface Group 1, except as set forth in the following, provides two-wire voice-frequency transmission at the customer's premises.

Interface Group 1 is not provided in association with Trunkside Access when the first point of switching is an access tandem. In addition, Interface Group 1 is not provided in association with Trunkside Access when the first point of switching provides only four-wire terminations.

b. Interface Group 2

Interface Group 2 provides four-wire voice-frequency transmission at the customer's premises.

c. Interface Group 6 - BSE

Interface Group 6 provides DS1-level digital transmission at the customer's premises. The interface may be provided with Clear Channel Capability (BSE).

d. Interface Group 9

Interface Group 9 provides DS3-level digital transmission at the customer's premises.

e. Available Premises Interface Codes

The following matrix lists the NCI codes available for each Interface Group with additional information defining the availability of each offering. The provision of some NCI codes generally requires placement of the Telephone Company equipment at the customer's premises. These codes are denoted with a footnote designator [1].

6. SWITCHED ACCESS SERVICE

6.1 GENERAL
6.1.2 RATE CATEGORIES

A.3.e. (Cont'd)

INTERFACE GROUP	TELEPHONE COMPANY SWITCH SUPERVISORY	NCI CODE	SWITCHED ACCESS SERVICE CSL OR FGA	CST1 OR FGB	CST2 OR FGC	CST3 OR FGD	*DID*	
1	LO	2LS2	X					
	LO	2LS3	X					
	GO	2GS2	X					
	GO	2GS3	X					
	RV, EA, EB, EC	4EA3-E[1]		X	X	X	X	
	RV, EA, EB, EC	4EA3-M[1]		X	X	X	X	
	RV, EA, EB, EC	6EB3-E[1]		X	X	X	X	(Z)
	RV, EA, EB, EC	6EB3-M[1]		X	X	X	X	
	RV	2RV3-0		X	X	X		
	RV	2RV3-T		X	X	X	X	
	CCS	2N02				X		

[1] Telephone Company equipment is generally required at the customer's premises.

6. SWITCHED ACCESS SERVICE

6.1 GENERAL
6.1.2 RATE CATEGORIES
A.3.e. (Cont'd)

INTERFACE GROUP	TELEPHONE COMPANY SWITCH SUPERVISORY	NCI CODE	SWITCHED ACCESS SERVICE CSL OR FGA	CST1 OR FGB	CST2 OR FGC	CST3 OR FGD	*DID*
2	LO, GO	4SF2	X				
	LO	4LS2	X				
	GO	4GS2	X				
	RV, EA, EB, EC	4SF2		X	X	X	X
	RV, EA, EB, EC	6EA2-E[1]		X	X	X	X
	RV, EA, EB, EC	6EA2-M[1]		X	X	X	X
	RV, EA, EB, EC	8EB2-E[1]		X	X	X	X
	RV, EA, EB, EC	8EB2-M[1]		X	X	X	X
	EA, EB, EC	8EC2-M[1]		X	X	X	
	RV	4RV2-0		X	X	X	
	RV	4RV2-T		X	X	X	X
	CCS	4N02				X	

[1] Telephone Company equipment is generally required at the customer's premises

6. SWITCHED ACCESS SERVICE

6.1 GENERAL
6.1.2 RATE CATEGORIES

A.3.e. (Cont'd)

INTERFACE GROUP	TELEPHONE COMPANY SWITCH SUPERVISORY	NCI CODE	SWITCHED ACCESS SERVICE CSL OR FGA	CST1 OR FGB	CST2 OR FGC	CST3 OR FGD	*DID*
6	LO, GO	4DS9-15[1]	X				
	LO, GO	4DS9-15B[1]	X				
	LO, GO	4DS9-15S[1]	X				
	RV, EA, EB, EC	4DS9-15[1]		X	X	X	X
	RV, EA, EB, EC	4DS9-15B[1]		X	X	X	X
	RV, EA, EB, EC	4DS9-15S[1]		X	X	X	X
	CCS	4DS9-15				X	
	CCS	4DS9-15B[2]				X	
	CCS	4DS9-15S[2]				X	
9	LO, GO	4DS6-44[1]	X				
	LO, GO	2FCF-[3]	X	X	X	X	
	RV, EA, EB, EC	4DS6-44		X	X	X	
	RV, EA, EB, EC	2FCF-[3]	X	X	X	X	
	CCS	4DS6-44				X	
	CCS	2FCF-[3]				X	

[1] Company equipment is generally required at the customer's premises

[2] Required with Clear Channel Capability (BSE)

[3] Available when Switched Access Services are ordered in conjunction with DS3 optical provided and rated from Section 7. See U S WEST Communications (T)
Technical Publications PUB 77340 for the protocol options associated with DS3 (T)
equivalents.

6. SWITCHED ACCESS SERVICE

6.1 GENERAL
6.1.2 RATE CATEGORIES

A. Switched Transport (Cont'd)

4. Optional Features

Where transmission facilities permit, the Company will, at the option of the customer, provide the following Switched Transport optional features at the rates and charges set forth in 6.8, following.

a. POT Supervisory Signaling Arrangements

Where the transmission parameters permit, and where signaling conversion is required by the customer to meet its signaling capability, the customer may order a POT supervisory signaling arrangement for each transmission path. Available supervisory signaling arrangements for Lineside and Trunkside terminations are set forth in 3., preceding. Technical specifications for supervisory signaling are delineated in Technical Reference GR-334-CORE. (T)

b. Customer Specified Entry Switch Receive Level

This feature allows the customer to specify the receive transmission level at the first point of switching. The range of transmission levels which may be specified is described in Technical Reference GR-334-CORE. This feature is (T) available with Interface Groups 2, 6 and 9 for CSL, CST1, Feature Groups A and B.

c. Customer Specification of Switched Transport Termination

This option allows the customer to specify, for CST1 or for Feature Group B routed directly to an end office or an access tandem, a four-wire termination of the Switched Transport at the entry switch in lieu of a Company selected two- (T) wire termination. This option is available only when the CST1 or Feature Group B arrangement is provided with Transmission Type B1 performance.

6. SWITCHED ACCESS SERVICE

6.1 GENERAL
6.1.2 RATE CATEGORIES

A.4. (Cont'd)

d. Self Healing Alternate Route Protection

Self Healing Alternate Route Protection (SHARP) provides added reliability to Trunkside Switched Access Service transported over fiber optic facilities. This feature provides a separate facility path for the protection system between the Telephone Company serving wire center and the Telephone Company point of termination located in the same building as the customer's designated premises.

This added protection is provided by ensuring that backup electronics and two physically separate facility paths are used in the provisioning of the service. A primary (or working) service path is established between the serving wire center and the customer designated premises. A secondary (or protect path) is provisioned on a U S WEST provided fiber based DS1 or DS3 facility between the customer designated premises and the serving wire center via a Telephone Company designated alternate wire center. Due to constraints of the local network architecture as determined by the Telephone Company, there may be occasions where the service will be provisioned without the use of an alternate wire center. Should the working path or electronics fail, or the service performance becomes impaired, the service will automatically switch to the service protect path in order to maintain a near continuous flow of information between locations.

This optional feature is only available for Entrance Facilities with Trunkside Switched Access Services associated with Interface Groups 6 and 9.

When a customer desires SHARP protection for a particular trunk group, all trunks in that trunk group must be ordered with the SHARP optional feature.

6. SWITCHED ACCESS SERVICE

6.1 GENERAL
6.1.2 RATE CATEGORIES

A.4.d. (Cont'd)

The Company will establish, at a minimum of one DS1 SHARP facility, the number of DS1 or DS3 SHARP facilities required.

Technical Specifications for SHARP are delineated in U S WEST Communications Technical Publication PUB 77340.

Rates and charges are described as set forth in 6.7.1., following.

The offering of SHARP requires the use of existing fiber optic facilities. Should facilities not be available, it may be necessary to construct such facilities either as (1) normal or (2) Special Construction. If Special Construction is involved, the regulations as set forth in Tariff F.C.C. No. 2 (2.6.4.D.1.) apply. For a list of facility locations where SHARP may be available as normal construction, see National Exchange Carrier Association Inc., Tariff F.C.C. No. 4.

e. Multiple POTs Tandem Sectorization (MPTS) [1] (C)

Multiple POTs Tandem Sectorization (MPTS) is an optional feature designed to meet the traffic routing requirements of customers whose CST2, CST3, Feature Group C and D originating Switched Access Services are routed through an access tandem from multiple customer points of termination (POTs).

[1] Effective February 20, 1999, MPTS is limited to existing customers on existing MPTS trunk groups only. Customers with MPTS in service may augment existing MPTS trunk groups until the service is moved or disconnected. If the service is moved or disconnected, MPTS may not be reestablished. (C)

6. SWITCHED ACCESS SERVICE

6.1 GENERAL
6.1.2 RATE CATEGORIES

A.4.e. (Cont'd)

MPTS is available in connection with originating CST2, CST3, Feature Group C and D Services. MPTS allows originating CST2, CST3, Feature Group C and D traffic to be directed via an access tandem to a specific POT designated by the customer. MPTS permits customers with multiple customer points of termination (POTs) within a tandem serving area to balance the call volume within their respective networks. MPTS may be used in conjunction with the Common Switching Optional Feature Service Class Routing (e.g., 8XX, 900, Operator), as specified in 6.3.1, following, with the exception of *SWITCHNET*. (C)

End offices subtending the tandem serving area will be divided into sectors, referred to as CST2, CST3, Feature Group C and D Tandem Sectors, which will be defined by the Company. Each tandem sector must be treated as a unit and cannot be subdivided. Tandem sectors are standard for all customers who purchase MPTS. MPTS must be ordered to every sector of an access tandem. A customer with multiple POTs within the tandem serving area can designate to which POT the traffic from a specific tandem sector will be routed. For example, a customer with multiple POTs can request that all originating calls from a tandem sector be directed to a single POT. In addition, originating traffic from a different tandem sector could be routed to the same POT or a different POT as designated by the customer. (T)

Tandem routed traffic can be delivered to a minimum number of two POTs and a maximum number of POTs that is less than or equal to the number of tandem sectors defined for a particular tandem. The end offices associated with the tandem sectors can be found in the U S WEST Communications Tandem Sectorization Guide.

6. SWITCHED ACCESS SERVICE

6.1 GENERAL
6.1.2 RATE CATEGORIES

A.4.e. (Cont'd)

The Company shall not be required to route traffic from a tandem sector to more than one POT unless the customer has the optional feature, Service Class Routing as described in 6.3.1.L., following, in addition to MPTS. Tandem routed traffic with Service Class Routing can be delivered by traffic type to a minimum number of one POT and a maximum number of POTs that is less than or equal to the number of tandem sectors defined for a particular tandem. A maximum number of four (4) trunk groups with mixed traffic types in accordance with the Service Class Routing specifications is allowed for each designated tandem sector. Each traffic type (e.g., 8XX, 900, MTS) within a tandem sector can be designated to the same POT or different POTs. A customer with multiple POTs must direct all originating calls from a tandem sector to a single POT by traffic type. (T) (C)

MPTS in conjunction with Service Class Routing - A customer may designate one to four POTs per traffic type. For example, when MPTS is ordered for a specific tandem, it is possible to route all of a particular traffic type (e.g., 8XX or Operator) to only one POT subtending that tandem, as long as other traffic type(s) comply to the stated MPTS guidelines of directing traffic to multiple POTs within a tandem serving area as referred to in 6.3.1.L., following. (C)

MPTS in conjunction with Alternate Traffic Routing - If a customer wants a direct trunk group from an end office to alternate route to a tandem routed trunk group subtending the same end office, the customer can designate the direct routed traffic sent to any POT, but the tandem routed trunk group must be routed to the customer designated point of termination (POT) that is specified for the tandem sector as referred to in 6.3.1.M., following.

6. SWITCHED ACCESS SERVICE

6.1 GENERAL
6.1.2 RATE CATEGORIES

A.4. (Cont'd)

f. Multiplexing for EF and DTT facilities (T)

Multiplexing provides the capability of converting the capacity or bandwidth of a facility from a higher level to a lower level or from a lower level to a higher level. Multiplexing functions for an EF are available at a SWC. For DTT facilities, multiplexing is available at a Company Hub, end office or access tandem. Multiplexing arrangements are associated with the facility with the higher capacity or bandwidth (e.g., a DS1 to Voice Grade multiplexing arrangement is associated with the facility using a DS1 connection). (Common transport multiplexing, as described in A.1, preceding, is provided on the end office side of the access tandem when tandem routing is requested.) (C) | (C)

EF and DTT multiplexing arrangements may be connected to an Expanded Interconnection-Collocation Channel Termination as set forth in Section 21, following. (T)

EF and DTT multiplexing arrangements are described following. (T)

<u>DS1 to Voice Grade</u>

DS1 to Voice Grade multiplexing is an arrangement that provides a Company multiplexer which converts a DS1 channel to twenty-four Voice Grade channels utilizing time division multiplexing. For example, the customer has the option of ordering a DS1 to Voice Grade multiplexer for a DS1 Entrance Facility at the SWC when Voice Grade DTT is requested to an end office.

<u>DS3 to DS1</u>

DS3 to DS1 multiplexing is an arrangement which converts a DS3 channel to twenty-eight DS1 channels utilizing time division multiplexing. The twenty-eight channels may be further multiplexed utilizing DS1 to Voice Grade multiplexing equipment.

6. SWITCHED ACCESS SERVICE

6.1 GENERAL
6.1.2 RATE CATEGORIES

A.4.f. (Cont'd)

EF and DTT multiplexing equipment is provided at no charge by the Company (at a location determined by the Company as part of its overall network design) when the following conditions exist:

(D)
(D)

- a DTT at a DS1 level is requested from a SWC to an access tandem in conjunction with TST from an access tandem to subtending end offices, or

- a DS1 DTT facility terminates in an end office except when Lineside and Trunkside Access are combined on the same facility.

If the customer chooses to order multiplexing equipment at a location other than the location determined by the Company, the customer will be assessed EF and DTT multiplexing rates and charges.

EF and DTT multiplexing arrangements are required and the customer is assessed multiplexing rates and charges as set forth in 6.8, following, when the following conditions exist:

- a DS3 EF facility is requested, or

- a DS3 EF connects to a DS1 DTT facility, or (C)

- a DS3 EF is requested with a DS3/DS1 multiplexer and a DS1/DS0 multiplexer for connection to a Voice Grade DTT facility, or (T) (T)

- a DS1 EF connects to a Voice Grade DTT facility, or

(D)

- a higher capacity DTT facility connects to a lower capacity DTT facility at a Company Hub, or

- a DS1 DTT facility transports a combination of Lineside and Trunkside Access to an end office on the same facility, or

- Shared Use facilities are requested.

6. SWITCHED ACCESS SERVICE

6.1 GENERAL
6.1.2 RATE CATEGORIES

A.4. (Cont'd) (T)

g. Tandem Signaling Information Option

Tandem Signaling Information (TSI) is an option of a DTT facility that routes (T)
traffic direct to an end office, not through a Company provided tandem. TSI (T)
provides the capability of transporting in-band (MF) or out of band (SS7) signaling information over EF and DTT facilities for the purpose of providing tandem signaling information between a customer-provided tandem switch premises and a Company equal access end office. In-band TSI provides the Carrier Identification Code (CIC) which identifies the interexchange carrier and the 0ZZ code which identifies the interexchange carrier trunk to which traffic should be directly routed. For out of band TSI, the CIC and 0ZZ code equivalent is provided in the Transit Network Selection (TNS) and the Network Identification Code (NIC) of the SS7 parameter initial address message. When a customer requires TSI to be provided out of band, the customer must order CCSAC service using the Common Channel Signaling Network (CCSN) as set forth in Section 20, following.

When TSI is ordered on a directly routed DTT facility, only CST3 or FGD (T)
Service may be transported over the facility.

6. SWITCHED ACCESS SERVICE

6.1 GENERAL
6.1.2 RATE CATEGORIES (Cont'd)

B. Local Switching

The Local Switching rate category provides the local end office switching, end user line termination and intercept functions necessary to complete the transmission of Switched Access Communications to and from the end users served by the local end office. The Local Switching rate categories are described following. Local (C)
Switching rates are set forth in 6.8, following. The application of these rates with (M)
respect to the different types of service is as set forth in 6.7.1, following. (C)

1. Local End Office Switching Functions

(M)

a. Common Switching

Common Switching provides the local end office switching functions associated with the various access switching arrangements. The services arrangements (M)
(e.g., Features Group Arrangements and BSAs) are described in 6.2, following. (T)
(T)

Included as part of Common Switching are various optional features and BSEs which the customer can order to meet its specific communications requirements. (M)
These optional features and BSEs are described in 6.3.1, following.

b. Transport Termination

(M)

Transport Termination provides for the lineside or trunkside arrangements which terminate the Switched Transport facilities. Included as part of Transport (T)
Termination are various optional termination arrangements and BSEs. These (M)
optional terminating arrangements and BSEs are described in 6.3.2, following.

The number of Transport Terminations provided for the lineside or trunkside arrangement will be determined by the Company as set forth in 6.5.8, following.
The number of transmission paths will be determined as set forth in 6.5.7, following.

(M)

Certain material previously found on this page can now be found on Page 6-36.
Certain material on this page formerly appeared on Page 6-36 and 6-37.

6. SWITCHED ACCESS SERVICE

6.1 GENERAL
6.1.2 RATE CATEGORIES

B. Local Switching (Cont'd)

2. Line Termination Functions (M)

WATS Access Line Terminations are provided for end user lines terminating in the local end offices.

The WATS Access Line Terminations are differentiated by line vs. trunk-side terminations. In addition, there are various types of originating and terminating line-side terminations depending on the type of signaling associated with the WATS Access Line. Line-side terminations are available with either dial-pulse or dual-tone multifrequency address signaling.

Trunk-side terminations are available for WATS Access Lines equipped with Answer Supervision. Only originating WATS Access Lines may be ordered with the Answer Supervision optional feature. The terminations for Answer Supervision use reverse battery type supervisory signaling. The reverse battery and E&M interfaces for two-wire or four-wire may be provided where operating conditions permit. For other technical details see Technical Reference GR-334-CORE.

3. Intercept Function

The Intercept Function provides for the termination of a call at a Company Intercept operator or recording. The operator or recording tells a caller why a call, as dialed, could not be completed, and if possible, provides the correct number. (M)

Certain material on this page formerly appeared on Page 6-37.

6. SWITCHED ACCESS SERVICE

6.1 GENERAL
6.1.2 RATE CATEGORIES

B. Local Switching (Cont'd)

4. Local Switching Rate Categories (T)

a. The Local Switching per-MOU rate element is divided into four distinct categories, LS1 and LS2 for Feature Group arrangements, LS3 and LS4 for CSL and CST serving arrangements. (T) (M)

LS1 provides local dial switching for Feature Groups A, B and bundled DID, except for FGA and FGB used to terminate traffic to a WATS Access Line provided from an equal access end office.

LS2 provides local dial switching for Feature Groups C and D, for FGA and FGB used to terminate traffic to a WATS Access Line provided from an equal access end office, and for Feature Groups A and B originating or terminating access minutes when the service is provided to customers who furnish interstate MTS/WATS.

LS3 provides local dial switching for CSL, CST1 and unbundled DID service, except for CSL and CST1 used to terminate traffic to a WATS Access Line provided from an equal access end office.

LS4 provides local dial switching for CST2 and CST3, for CSL and CST1 used to terminate traffic to a WATS Access Line provided from an equal access end office, and for CSL and CST1 originating or terminating access minutes when the service is provided to customers who furnish interstate MTS/WATS. (M)

Where end offices are appropriately equipped, international dialing may be provided as a capability associated with LS2 and LS4. International dialing provides the capability of switching international calls with service prefix and address codes having more digits than are capable of being switched through a standard CST2, CST3, FGC or FGD equipped end office.

Certain material previously found on this page can now be found on Page 6-35.
Certain material on this page formerly appeared on Page 6-35.

6. SWITCHED ACCESS SERVICE

6.1 GENERAL
6.1.2 RATE CATEGORIES

B.4. (Cont'd)

b. End Office Shared Port

The End Office Shared Port rate provides for the termination of common transport trunks in shared end office ports and in remote switching system or module (RSS or RSM) ports. The End Office Shared Port rate is assessed on a per-MOU basis to all trunkside originating and terminating access minutes utilizing tandem routing to an end office. If tandem routing is being utilized to a RSS or RSM (via a host office), the shared port rate is assessed to the access minutes originating or terminating from that RSS or RSM and is not assessed at the host office. If the customer has requested direct routing from the SWC to a RSS or RSM (via a host office), the End Office Shared Port rate is assessed to the access minutes originating or terminating from the RSS or RSM. This rate is in addition to the End Office Dedicated Trunk Port rate assessed for the dedicated trunk terminating in the host office as described below. The port charge is not assessed to FGA, CSL or Voice DA traffic.

c. End Office Dedicated Trunk Port

The End Office Dedicated Trunk Port rate provides for termination of a trunk to a dedicated trunk port in an end office. The rate is assessed per month for each FG or BSA trunk in service (excludes FGA and CSL) directly routed (via DTT) between the SWC and the end office. The rate is not assessed to trunks directly routed to a Voice DA location.

(D)
|
(D)

6. SWITCHED ACCESS SERVICE

6.1 GENERAL (Cont'd)

6.1.3 SPECIAL FACILITIES ROUTING

Any customer may request that the facilities used to provide Switched Access Service be specially routed. The regulations, rates and charges for Special Facilities Routing (i.e., Diversity) are as set forth in Section 11, following.

6.1.4 DESIGN LAYOUT REPORT

The Company will provide to the customer the makeup of the facilities and services provided from the customer's premises to the first point of switching or from the customer's point of interconnection to the first point of switching when Switched Access Service connects to EIC Service, as set forth in Section 21, following. This information will be provided in the form of a Design Layout Report. Design Layout Reports will also be provided for designed WATS Access Lines (i.e., the Private Line Transport Services) in acceptance with the provisions of 7.1.C., following. The Design Layout Report will be provided to the customer at no charge, and will be reissued or updated whenever these facilities are materially changed. (T)

6.1.5 ACCEPTANCE TESTING

At no additional charge, the Company will perform acceptance testing at the time of installation. Acceptance tests will be performed to insure that the service is operational and meets applicable technical parameters. The Company will, at the customer’s request, schedule a mutually agreeable time to perform acceptance testing in cooperation with the customer. If the customer is unable to participate in the acceptance testing, or if the customer requests that service installation be completed, without their presence, the service is assumed to be accepted (i.e., blind acceptance) by the customer.

6. SWITCHED ACCESS SERVICE

6.1 GENERAL (Cont'd)

6.1.6 ORDERING OPTIONS AND CONDITIONS

Switched Access Service is ordered under the Access Order provisions set forth in Section 5, preceding. Also included in that section are other charges which may be associated with ordering Switched Access Service (e.g., Cancellation Charges, etc.).

6.1.7 SPECIAL HIGH VOLTAGE PROTECTIVE APPARATUS

If Switched Access Service terminates in a high voltage environment, such as an electric power station, Special High Voltage Protective Apparatus may be required as set forth in 13.7, following. (T)

6. SWITCHED ACCESS SERVICE

6.1 GENERAL (Cont'd)

6.1.8 GENERIC NAMES

The following list of U S WEST designated BSEs identifies the generic equivalent name for each of the BSEs from Telcordia's ONA Services User Guide, dated July 31, 1991. (T)

GENERIC	U S WEST
Access to Clear Channel Capability	Clear Channel Capability
Alternate Routing	Alternate Traffic Routing
Answer Supervision With a Lineside Interface	Answer Supervision - Lineside
Call Forwarding - Multiple Simultaneous Calls Interswitch	Call Forwarding Variable
Call Forwarding Variable	
Called Directory Number Delivery via *DID*	Called Directory Number Delivery (*DID)*
Calling Billing Number Delivery • FGB Protocol • FGD Protocol	Automatic Number Identification
Calling Directory Number Delivery via BCLID	Caller Identification - Bulk (BCLID)
Calling Directory Number Delivery via ICLID	Caller Identification - Number (ICLID)
DID Trunk Queuing	*DID* Trunk Queuing

6. SWITCHED ACCESS SERVICE

6.1 GENERAL
6.1.8 GENERIC NAMES (Cont'd)

GENERIC	U S WEST	
Flexible ANI Information Digits	Flexible ANI	
Make Busy Key	Make Busy	
Message Desk (SMDI)	Message Delivery Service	
Message Desk (SMDI) Expanded	Message Delivery Service - Interoffice	(N) (N)
Message Waiting Indicator • Activation Visual • Activation Audible		
Multiline Hunt Group • CO Announcements • Uniform Call Distribution Line Hunting	Uniform Call Distribution Arrangement	(T)
Multiline Hunt Group • Overflow • Individual Access to Each Port In Hunt Group	Hunt Group Arrangement	
Multiplexing - T1 Transport 1.544 Mbps - Lineside	Interface Group 6	
Three Way Call Transfer	Call Transfer	
Three Way Calling	Three-Way Calling	
UCD with Queuing	Queuing for Use With Uniform Call Distribution	

6. SWITCHED ACCESS SERVICE

6.2 PROVISION AND DESCRIPTION OF SWITCHED ACCESS SERVICE

Switched Access Service is provided in different serving arrangements. The provision of each type of Switched Access Service requires transport facilities (Entrance Facilities, DTT facilities, and TST facilities for tandem routed traffic), (C)
multiplexing equipment and the appropriate local switching functions. In addition, WATS Access Lines, as provided in Section 7, following, may, at the option of the customer, be provided for use with Lineside and Trunkside Access.

Transmission Types (i.e., A1, B, B1 and C) have been identified for the provision of Switched Access Services. The Transmission Types are dependent on the Interface Group and the routing of the service, i.e., whether the service is routed directly to the end office or via an access tandem. The standard parameter limits for the Transmission Types are set forth in 6.4, following, and in Technical Reference GR-334-CORE.

Serving arrangements are arranged for either originating, terminating or two-way calling, based on the customer end office switching capacity ordered. Originating calling permits the delivery of calls from Telephone Exchange Service locations to the customer's premises. Terminating calling permits the delivery of calls from the customer's premises to Telephone Exchange Service locations. Two-way calling permits the delivery of calls in both directions, but not simultaneously. The Company will determine the type of calling to be provided unless the customer requests that a different type of directional calling is to be provided. In such cases, the Company will work cooperatively with the customer to determine the directionality.

There are various optional features and BSEs available with Switched Access Service. These additional features are provided as Switched Transport, Common Switching, Transport Termination and Line Termination.

Following are detailed descriptions of each of the available Switched Access Services. Each service is described in terms of its specific physical characteristics and calling patterns, the transport provisioning, the transmission specifications with which it is provided, the optional features and BSEs available for use with it and the standard testing capabilities.

The Common Switching, Transport Termination, and Line Termination optional features and BSEs, which are described in 6.3, following, unless specifically stated otherwise, are available at all Company end office switches.

6. SWITCHED ACCESS SERVICE

6.2 PROVISION AND DESCRIPTION OF SWITCHED ACCESS SERVICE (Cont'd)

6.2.1 FEATURE GROUP A (FGA)

A. Description

1. FGA Access, which is available to all customers, provides a line-side termination to Company end office switches for the customer's use in originating communications from and terminating communication to an Interexchange Carrier's interstate service or a customer-provided interstate communications capability. The customer must specify the Interexchange Carrier to which the FGA Service is connected or, in the alternative, specify the means by which the FGA Access communication is transported to another state. (T)

2. FGA is provided in connection with Company electronic and electromechanical end offices. FGA may be transported via a DS3, DS1 or Voice Grade Entrance Facility and via a DS3, DS1 or Voice Grade DTT facility. When the customer orders FGA and Trunkside Access to be transported via the same DTT facility, DS1 to Voice Grade multiplexing equipment is always required at the end office at the rates and charges set forth in 6.8, following. When the customer does not combine FGA and Trunkside Access on the same facility, the Company will provide DS1 to Voice Grade multiplexing equipment at no charge. At the option of the customer, FGA is provided on a single or multiple line group basis and is arranged for originating calling only, terminating calling only, or two-way calling.

3. FGA provides a line-side termination at the first point of switching. The line-side termination will be provided with either ground-start supervisory signaling or loop-start supervisory signaling. The type of signaling is at the option of the customer.

4. The Company shall select the first point of switching, within the selected LATA, at which the line-side termination is to be provided unless the customer requests a different first point of switching and Company facilities and measurement capabilities are available to accommodate such a request. (T) (T)

6. SWITCHED ACCESS SERVICE

6.2 PROVISION AND DESCRIPTION OF SWITCHED ACCESS SERVICE
6.2.1 FEATURE GROUP A (FGA)

A. Description (Cont'd)

5. A seven-digit local telephone number assigned by the Company is provided for access to FGA switching in the originating direction. The seven-digit local telephone number will be associated with the selected end office switch and is in the form NXX-XXXX. (T) (T)

   If the customer requests a specific seven-digit telephone number that is not currently assigned, and the Company can, with reasonable effort, comply with that request, the requested number will be assigned to the customer. (T)

6. FGA switching, when used in the terminating direction, is arranged with dial-tone start-dial signaling and dial-pulse address signaling. When used in the terminating direction, FGA switching may, at the option of the customer, be arranged for dual-tone multifrequency (DTMF) address signaling, subject to the availability of the equipment at the first point of switching. When FGA switching is provided in a hunt group or uniform call distribution arrangement, all FGA switching will be arranged for the same type of address signaling.

7. No address signaling is provided by the Company when FGA switching is used in the originating direction. Address signaling in such cases, if required by the customer, must be provided by the customer's end user using inband-tone signaling techniques. Such inband-tone address signals will not be regenerated by the Company and will be subject to the ordinary transmission capabilities of the Switched Transport provided. (T) (T)

6. SWITCHED ACCESS SERVICE

6.2 PROVISION AND DESCRIPTION OF SWITCHED ACCESS SERVICE
6.2.1 FEATURE GROUP A (FGA)

A. Description (Cont'd)

8. FGA switching, when used in the terminating direction, may be used to access valid NXX codes in the LATA, local operator service (0- and 0+), Voice DA (411 or 555-1212, whichever is available), emergency reporting service (911, where available), exchange telephone repair (611, where available), community information services of an information service provider, and other customers' services (by dialing the appropriate digits). Charges for FGA terminating calls requiring operator assistance, or calls to 611 or 911, will only apply where sufficient call details are available. Additional non-access charges will also be billed on a separate account for: (C)

   - An operator surcharge, as set forth in the general and/or local exchange tariffs, for local operator assistance (0- and 0+) calls;

   - Calls to certain community information services in accordance with the Information Provider's applicable service rates when the Company performs the billing function for the Information Provider;

   - Calls from a FGA line to another customer's service in accordance with that customer's applicable service rates when the Company performs the billing function for that customer.

9. FGA calls terminating outside of the dial tone office are assessed Tandem Transmission rates in addition to the applicable Switched Access rates when calls are terminated within the dial tone office. Tandem Transmission mileage measurement is described in 6.7.11, following.

(D)

6. SWITCHED ACCESS SERVICE

6.2 PROVISION AND DESCRIPTION OF SWITCHED ACCESS SERVICE
6.2.1 FEATURE GROUP A (FGA)

A. Description (Cont'd)

10. FGA calls to Voice DA (411 or 555-1212, whichever is available), are subject to the Voice DA Service Call rate as set forth in 9.6.1.A., following, and are not subject to Switched Access rates as set forth in Section 6. (C)

11. When a FGA switching arrangement for an individual customer (a single line or entire hunt group) is discontinued at an end office, an intercept announcement is provided. This arrangement provides, for a limited period of time, an announcement that the service associated with the number dialed has been disconnected.

12. Use of certain optional features and BSEs, available in B., following, may result in additional usage charges. For example, if a customer orders Three-Way Calling, additional Switched Access Service usage rates could apply if the customer establishes two calls.

(D)

6. SWITCHED ACCESS SERVICE

6.2 PROVISION AND DESCRIPTION OF SWITCHED ACCESS SERVICE
6.2.1 FEATURE GROUP A (FGA) (Cont'd)

B. Optional Features and BSEs

1. Switched Transport Optional Features

   - Supervisory Signaling
   - Customer Specified Entry Switch Receive Level

2. Common Switching Optional Features and BSEs

   - Call Denial
   - Service Code Denial
   - Hunt Group Arrangement
   - Uniform Call Distribution Arrangement
   - Nonhunting Number for Use with Hunt Group Arrangement or Uniform Call Distribution Arrangement
   - WATS Access Service
   - InterLATA Toll Denial
   - Call Transfer (BSE)
   - Three-Way Calling (BSE)
   - Caller Identification - Number (BSE)

6. SWITCHED ACCESS SERVICE

6.2 PROVISION AND DESCRIPTION OF SWITCHED ACCESS SERVICE
6.2.1 FEATURE GROUP A (FGA)

B.2. (Cont'd)

- Caller Identification - Bulk (BSE)
- Message Delivery Service (BSE)
- Message Delivery Service - Interoffice (BSE) (N)
- Make Busy (BSE)
- Call Forwarding Variable (BSE)
- Queuing for Use With UCD (BSE)

3. Transport Termination Optional Features

- Two-way operation with dial-pulse address signaling and loop-start supervisory signaling
- Two-way operation with dial-pulse address signaling and ground-start supervisory signaling
- Two-way operation with dual-tone multifrequency address signaling and loop-start supervisory signaling
- Two-way operation with dual-tone multifrequency address signaling and ground-start supervisory signaling
- Terminating operation with dial-pulse address signaling and loop-start supervisory signaling

6. SWITCHED ACCESS SERVICE

6.2 PROVISION AND DESCRIPTION OF SWITCHED ACCESS SERVICE
6.2.1 FEATURE GROUP A (FGA)

B.3. (Cont'd)

- Terminating operation with dial-pulse address signaling and ground-start supervisory signaling
- Terminating operation with dual-tone multifrequency address signaling and loop-start supervisory signaling
- Terminating operation with dual-tone multifrequency address signaling and ground-start supervisory signaling
- Originating operation with loop-start supervisory signaling
- Originating operation with ground-start supervisory signaling

4. Line Termination Optional Features and BSEs

   - Answer supervision - Lineside (BSE)

5. Certain other features which may be available in connection with Feature Group A are provided under the Telephone Company's state access tariff and/or local exchange service tariff. These are:

   - Custom Calling Features (excluding Three-Way Calling, Call Transfer, Caller Identification - Number and Call Forwarding Variable)
   - *MARKET EXPANSION LINE*
   - Bill Number Screening
   - IntraLATA extensions
   - Open Switching Interval Protection (OSIP)
   - Message Waiting Indication - Audible

6. SWITCHED ACCESS SERVICE

6.2 PROVISION AND DESCRIPTION OF SWITCHED ACCESS SERVICE
6.2.1 FEATURE GROUP A (FGA) (Cont'd)

C. Transmission Performance

FGA is provided with either Transmission Type B or Type C performance. The standard parameter limits associated with these Transmission Types are guaranteed to the first point of switching. Transmission Type C performance is provided with Interface Group 1 and Transmission Type B performance is provided with Interface Groups 2, 6 and 9, as available. Voice band Data Transmission Type DB parameter limits are provided with FGA to the first point of switching as delineated in Technical Reference GR-334-CORE.

D. Testing Capabilities

Where equipment is available and seven-digit access is provided, FGA can be tested in the terminating direction to balance (100-type) test line and milliwatt (102-type) test line. In addition to the tests described in 6.1.5, preceding, which are included with the installation of service, additional Cooperative Acceptance Testing and Non-Scheduled Testing are available as set forth in Section 13, following. (T)

6. SWITCHED ACCESS SERVICE

6.2 PROVISION AND DESCRIPTION OF SWITCHED ACCESS SERVICE (Cont'd)

6.2.2 FEATURE GROUP B (FGB)

A. Description

1. FGB Access, which is available to all customers, provides a trunk-side termination to Company end office switches for the customer's use in originating communications from and terminating communications to an Interexchange Carrier's interstate service or a customer-provided interstate communications capability. The customer must specify the Interexchange Carrier to which the FGB Service is connected or, in the alternative, specify the means by which FGB access communication is transported to another state.

2. FGB, when directly routed to an end office via DTT is provided at appropriately equipped Company electronic end office switches. When provided via Company designated electronic access tandem switches with TST, FGB switching is provided at Company electronic and electromechanical end office switches.

3. When Feature Group B service is directly routed to an end office, the Switched Transport configuration is composed of an Entrance Facility and a DTT facility to an end office. When Feature Group B is switched through an access tandem, the Switched Transport configuration is composed of an Entrance Facility, a DTT facility between the SWC and the access tandem and TST from the access tandem to the end offices subtending the access tandem. Multiplexing options are described in 6.1.2, preceding. (C) | (C)

4. FGB is provided as a trunk-side termination through the use of end office or access tandem switch trunk equipment. The switch trunk equipment is provided with wink-start start-pulsing signals and answer-disconnect supervisory signals.

5. FGB switching is provided with multifrequency (MF) address signaling in both the originating and terminating directions. Address signals and address information required by the customer in the originating direction must be provided by the customer's end user using inband-tone signaling techniques except switching that has automatic number identification (ANI) or rotary dial station signaling. Such inband-tone address signals will not be regenerated by the Company and will be subject to the ordinary transmission capabilities of the Switched Transport provided.

6. SWITCHED ACCESS SERVICE

6.2 PROVISION AND DESCRIPTION OF SWITCHED ACCESS SERVICE
6.2.2 FEATURE GROUP B (FGB)

A. Description (Cont'd)

6. The access code for non-8XX FGB Access Service switching is a uniform access code. The form of the uniform access code is 950-XXXX or 1 + 950-XXXX for carriers. These uniform access codes will be the assigned access numbers of all non-8XX FGB Access Service provided to the customer by the Company. No access code is required for FGB switching used to provide 800 DB Access Service. The telephone number dialed by the customer's end users is of the form 1+8XX+NXX-XXXX.

7. FGB switching, when used in the terminating direction, may be used to access valid NXX codes in the LATA, community information services of an information service provider, and other customers' services (by dialing the appropriate digits). When FGB is directly routed to an end office via DTT, only those valid NXX codes served by that end office may be accessed. When FGB is routed through an access tandem, only those valid NXX codes served by end offices subtending the access tandem may be accessed. Additional non-access (D) charges will be billed for calls from an FGB trunk to another customer's service in accordance with that customer's applicable service rates when the Company performs the billing function for that customer. Calls in the terminating direction will not be completed to 101XXXX, 950-XXXX (or 1+ 950-XXXX) access codes, local operator assistance (0- and 0+), Voice DA (411 or 555-1212, where (C) available) and service codes 611 and 911. Calls will be completed to Voice DA (NPA+555-1212 or 555-1212) when FGB Switching is combined with Voice DA (C) Switching. The combination of FGB Switched Access Service with Voice DA Service is provided as set forth in Section 9, following. FGB may not be switched, in the terminating direction to another Trunkside Switched Access Service.

(D)

(D)

6. SWITCHED ACCESS SERVICE

6.2 PROVISION AND DESCRIPTION OF SWITCHED ACCESS SERVICE
6.2.2 FEATURE GROUP B (FGB)

A. Description (Cont'd)

8. The Telephone Company will establish a trunk group or groups for the customer at end office switches or access tandem switches where FGB switching is provided. When required by technical limitations, a separate trunk group will be established for each type of FGB switching arrangement provided. Different types of FGB or other switching arrangements may be combined in a single trunk group at the option of the Telephone Company.

9. When all FGB switching arrangements are discontinued at an end office and/or in a LATA, an intercept announcement is provided. This arrangement provides, for a limited period of time, an announcement that the service associated with the number dialed has been disconnected.

B. Optional Features

1. Switched Transport Optional Features

   - Customer Specification of Switched Transport Termination
   - Supervisory Signaling
   - Customer Specified Entry Switch Receive Level
   - Self Healing Alternate Route Protection (SHARP)

2. Common Switching Optional Features

   - Automatic Number Identification
   - Up to 7-digit Outpulsing of Access Digits to customer
   - Alternate Traffic Routing
   - WATS Access Service (WATS)

6. SWITCHED ACCESS SERVICE

6.2 PROVISION AND DESCRIPTION OF SWITCHED ACCESS SERVICES
6.2.2 FEATURE GROUP B (FGB)

B. Optional Features (Cont'd)

3. Line Termination Optional Features

   - Answer supervision for use with WATS Access Service

4. Another feature, Bill Number Screening, which may be available in connection with FGB, is provided under the Company's state access tariff and/or local exchange service tariffs.

C. Transmission Performance

FGB is provided with Transmission Type B1 performance. Transmission Type B1 standard parameter limits apply to the transmission path routed directly (i.e., between the customer's premises and the end office) and to each segment of an access tandem connection. Transmission Type B1 performance is provided with Interface Groups 1, 2, 6 and 9, as available. Voice band data Transmission Type DB1 parameter limits are provided with FGB when routed directly and to each segment of an access tandem connection as delineated in Technical Reference GR-334-CORE.

D. Testing Capabilities

FGB is provided, in the terminating direction where equipment is available, with seven-digit access to balance (100-type) test line, milliwatt (102-type) test line, nonsynchronous or synchronous test line, automatic transmission measuring (105-type) test line, data transmission (107-type) test line, loop around test line, short circuit test line and open circuit test line. In addition to the tests described in 6.1.5, preceding, which are included with the installation of service, additional Cooperative Acceptance Testing, Automatic Scheduled Testing, Cooperative Scheduled Testing, Manual Scheduled Testing and Non-Scheduled Testing are available as set forth in Section 13, following. (T)

6. SWITCHED ACCESS SERVICE

6.2 PROVISION AND DESCRIPTION OF SWITCHED ACCESS SERVICES (Cont'd)

6.2.3 FEATURE GROUP C (FGC)

A. Description

1. FGC Access, which is available only to providers of MTS and WATS, provides a trunk-side termination to Company end office switches for the customer's use in originating and terminating communications.

2. FGC is provided at all Company end office switches on a direct trunk basis via DTT or via Company-designated access tandem switches with TST. FGC switching is provided to the customer (i.e., providers of MTS and WATS) at an end office switch unless Feature Group D end office switching is provided in the same office. When FGD switching is available, FGC switching will not be provided.

3. When Feature Group C service is directly routed to an end office, the Switched Transport configuration is composed of an Entrance Facility and a DTT facility to an end office. When Feature Group C is switched through an access tandem, the Switched Transport configuration is composed of an Entrance Facility, a DTT facility between the SWC and the access tandem and TST from the access tandem to the end offices subtending the access tandem. Multiplexing options are described in 6.1.2, preceding. (C) | (C)

6. SWITCHED ACCESS SERVICE

6.2 PROVISION AND DESCRIPTION OF SWITCHED ACCESS SERVICES
6.2.3 FEATURE GROUP C (FGC)

A. Description (Cont'd)

4. FGC is provided as a trunk-side termination through the use of end office or access tandem switch trunk equipment. The switch trunk equipment is provided with answer and disconnect supervisory signaling. Wink-start start-pulsing signals are provided in all offices where available. In those offices where wink-start start-pulsing signals are not available, delay-dial start-pulse signaling is provided or immediate dial-pulse address signaling may be provided which allows dial pulses to be forwarded without a start-pulsing signal from the terminating office.

5. FGC is provided with multifrequency (MF) address signaling except in certain electromechanical end office switches where multifrequency signaling is not available. In such switches, the address signaling will be dial-pulse, or immediate dial pulse, whichever is available. Up to 12-digits of the called party number will be forwarded by Company equipment to the customer's premises. Such called party number signals will be subject to the transmission and signaling capabilities of the Switched Transport provided.

6. No access code is required for FGC switching. For calls in the North American Numbering Plan (NANP), a 7- or 10- digit number may be dialed by the customer's end user after dialing the prefix 0 or 1. For calls outside the NANP, and, if the end office is technically equipped for International Direct Distance Dialing (IDDD), a 7- to 15- digit number may be dialed after dialing the prefix 011 or 01. (T)

6. SWITCHED ACCESS SERVICE

6.2 PROVISION AND DESCRIPTION OF SWITCHED ACCESS SERVICES
6.2.3 FEATURE GROUP C (FGC)

A. Description (Cont'd)

7. FGC switching, when used in the terminating direction, may be used to access valid NXX codes in the LATA, community information services of an information provider, and other customers' services (by dialing the appropriate codes) when the services can be reached using valid NXX codes. When FGC is directly routed to an end office via DTT, only those valid NXX codes served by that office may be accessed. When FGC is routed through an access tandem only those valid NXX codes served by offices subtending the access tandem may be accessed. (D)

   Additionally, non-access charges will also be billed for calls from a FGC trunk to another customer's service in accordance with that customer's applicable service rates when the Company performs the billing function for that customer. Calls in the terminating direction will not be completed to 101XXXX, 950-XXXX (or 1+950-XXXX) access codes, local operator assistance (0- and 0+), Voice DA (411 or 555-1212) and service codes 611 and 911. Calls will be completed to (C)
   Voice DA (NPA+555-1212 or 555-1212) when FGC switching is combined with (C)
   Voice DA switching. The combination of FGC Switched Access Service with Voice DA Service is provided as set forth in Section 9, following. FGC may not be switched, in the terminating direction, to another Trunkside Switched Access Service.

8. The Company will establish a trunk group or groups for the customer at end office switches or access tandem switches where FGC switching is provided. When required by technical limitations, a separate trunk group will be established for each type of FGC switching arrangement provided. Different types of FGC or other switching arrangements may be combined in a single trunk group at the option of the Company.

(D)

(D)

6. SWITCHED ACCESS SERVICE

6.2 PROVISION AND DESCRIPTION OF SWITCHED ACCESS SERVICES
6.2.3 FEATURE GROUP C (FGC)

A. Description (Cont'd)

9. The Company will provide 1+ interLATA sent-paid access from pay telephones utilizing Smart Public Access Lines via FGC for calls dialed as 1+ and/or 101XXXX 1+ in the following manner. 1+ interLATA sent-paid access from pay telephones utilizing Basic Public Access Lines Service shall be provided by FGD or CST3. (C)

a. Smart Public Access Line (PAL)

For traffic originating from a Smart PAL, the customer to whom such calls are routed shall order FGC trunks from end offices to the customer's premises via direct trunks or via Operator Access Tandems, with the Operator Trunk-Full Feature type of transport termination, as set forth in 6.3.2, following. The trunks must be dedicated, and the customer shall specify the number of trunks required at each end office from which the customer will receive 1+ sent-paid traffic.

The customer is responsible for providing all other operator services signaling capabilities, as described in the Operator Services Systems Generic Requirements (OSSGR) Technical Reference FR-271 and the LATA Switching Systems Generic Requirements (LSSGR) Technical Reference FR-64.

When the Company provides Operator Services Signaling (OSS) between an Operator Access Tandem and the customer's premises, the customer will be required to order a separate and final trunk group from the Operator Access Tandem to the customer's premises for each Numbering Plan Area (NPA) within a LATA to identify the originating NPA. Also, the customer must order a separate trunk group for each type of coin control signaling that is utilized among the equal access end offices subtending an Operator Access Tandem.

The Company will not block 101XXXX 1+ calls and will route 101XXXX 1+ interLATA sent-paid traffic in accordance to the end user request. It will be the responsibility of the 101XXXX 1+ dialed carrier to complete the casual 101XXXX 1+ interLATA sent-paid call or to provide a recorded message to the end user. (C) (C) (C)

6. SWITCHED ACCESS SERVICE

6.2 PROVISION AND DESCRIPTION OF SWITCHED ACCESS SERVICES
6.2.3 FEATURE GROUP C (FGC)

A.9.a. (Cont'd) (T)

The Company will perform normal acceptance testing for sent-paid services for Smart PALs. In addition, the Company will perform testing for coin control and Operator Trunk-Full Feature (i.e., coin collect, coin return, 1+ person-to-person, operator recall, overtime, international direct distance dialing, and information calls). Test tapes must be received from the customer that will be processing the 1+ interLATA sent-paid traffic 45 days prior to the routing of said 1+ traffic to that customer. The Company will provide optional testing, at the request of the customer, as set forth in Section 13, following. (T)

6. SWITCHED ACCESS SERVICE

6.2 PROVISION AND DESCRIPTION OF SWITCHED ACCESS SERVICE
6.2.3 FEATURE GROUP C (FGC) (Cont'd)

B. Optional Features

1. Switched Transport Optional Features

   - Supervisory Signaling
   - Multiple POP Tandem Sectorization (MPTS) (T)
   - Self Healing Alternate Route Protection (SHARP).

2. Common Switching Optional Features

   - Automatic Number Identification
   - Delay-Dial Start Pulsing Signaling
   - Immediate Dial-Pulse Address Signaling
   - Dial-Pulse Address Signaling
   - Service Class Routing
   - Alternate Traffic Routing
   - Trunk Access Limitation
   - WATS Access Service (WATS)

3. Transport Termination Optional Features

   Operator Trunks - (i.e., Coin, Non-Coin or Combined Coin and Non-Coin) (T)

4. Line Termination Optional Features

   - Answer Supervision for Use With WATS Access Service

Certain material previously found on this page can now be found on Page 6-145.

6. SWITCHED ACCESS SERVICE

6.2 PROVISION AND DESCRIPTION OF SWITCHED ACCESS SERVICE
6.2.3 FEATURE GROUP C (FGC) (Cont'd)

(T)

C. Transmission Performance

FGC is provided with Transmission Type B1 performance. Transmission Type B1 standard parameter limits apply to the transmission path routed directly (i.e., between the customer's premises and the end office) and to each segment of an access tandem connection. Transmission Type B1 performance is provided with Interface Group 1, 2, 6 and 9, as available. Voice band data Transmission Type DB1 parameter limits are provided with FGC when directly routed and to each segment of an access tandem connection as delineated in Technical Reference GR-334-CORE. (T)

6. SWITCHED ACCESS SERVICE

6.2 PROVISION AND DESCRIPTION OF SWITCHED ACCESS SERVICE
6.2.3 FEATURE GROUP C (FGC) (Cont'd)

D. Testing Capabilities

FGC is provided, in the terminating direction where equipment is available, with seven-digit access to balance (100-type) test line, milliwatt (102-type) test line, nonsynchronous or synchronous test line, automatic transmission measuring (105-type) test line, data transmission (107-type) test line, loop around test line, short circuit test line and open circuit test line. In addition to the tests described in 6.1.5, preceding, which are included with the installation of service, additional Cooperative Acceptance Testing, Automatic Scheduled Testing, Cooperative Scheduled Testing or Manual Scheduled Testing, and Non-Scheduled Testing are available as set forth in Section 13, following, for FGC. (T)

6. SWITCHED ACCESS SERVICE

6.2 PROVISION AND DESCRIPTION OF SWITCHED ACCESS SERVICE (Cont'd)

6.2.4 FEATURE GROUP D (FGD)

A. Description

1. FGD is provided at Company-designated end office switches whether routed directly to an end office or via Company-designated electronic access tandem switches. FGD is also provided at Company equal access end office switches that subtend a TSP's premises when the DTT facility is equipped with TSI.

2. FGD, which is available to all customers, provides a trunk-side termination through the use of end office or access tandem switch trunk equipment. Wink-start, start-pulsing and answer-supervisory signaling are sent by the terminating office. Disconnect-supervisory signaling is sent from the originating or terminating office. When FGD uses SS7 out of band signaling, no signaling will be done via the message channel.

3. When Feature Group D service is directly routed to an end office, the Switched Transport configuration is composed of an Entrance Facility and a DTT facility to an end office. When Feature Group D is switched through an access tandem, the Switched Transport configuration is composed of an Entrance Facility, a DTT facility between the SWC and the access tandem and TST from the access tandem to the end offices subtending the access tandem. Multiplexing options are described in 6.1.2, preceding.

4. FGD switching is provided with multifrequency address signaling or SS7 out band signaling. With multifrequency address signaling, up to 12 digits of the called party number dialed by the customer's end user using dual-tone multifrequency or dial-pulse address signals will be provided by Company equipment to the customer's premises where the Switched Access Service terminates. Such address signals will be subject to the ordinary transmission capabilities of the Switched Transport provided. With SS7 out of band signaling, up to 12 digits of the called party number dialed by the customer's end user using dual tone multifrequency or dial pulse address signals is provided by the Company equipment to the customer's designated premises via CCSAC links. SS7 out of band signaling requires the customer to order the SS7 out of band signaling optional feature, as set forth in 6.3, following, and CCSAC Service as set forth Section 20, following. (T) (T) (T)

6. SWITCHED ACCESS SERVICE

6.2 PROVISION AND DESCRIPTION OF SWITCHED ACCESS SERVICE
6.2.4 FEATURE GROUP D (FGD)

A. Description (Cont'd)

s

5. FGD switching, when used in the terminating direction, may be used to access valid NXXs in the LATA, community information services of an information service provider, and other customer services (by dialing the appropriate codes) when such services can be reached using valid NXX codes. When directly routed to an end office via DTT, only those valid NXX codes served by that office may be accessed. When routed through an access tandem, only those valid NXX codes served by end offices subtending the access tandem may be accessed. (D)

   Terminating FGD, with tandem routing, may also, at the option of the customer, access valid NXX codes served by offices in which originating FGD is not available. Rating of this optional service is as set forth in 6.7.1.D.1., following.

   Additional non-access charges will also be billed for calls from an FGD trunk to another customer's service in accordance with that customer's applicable service rates when the Company performs the billing function for that customer. Calls in the terminating direction will not be completed to 101XXX, 950-XXXX (or 1 + 950-XXXX) access codes, local operator assistance (0- and 0+), Voice DA (411 or 555-1212) and service codes 611 and 911. Calls will be completed to Voice (C)
   DA (NPA+555-1212 or 555-1212) when FGD switching is combined with Voice (C)
   DA Switching. The combination of FGD Switched Access Service with Voice DA Service is provided as set forth in Section 9, following. FGD may not be switched, in the terminating direction, to another Trunkside Switched Access Service.

(D)

(D)

6. SWITCHED ACCESS SERVICE

6.2 PROVISION AND DESCRIPTION OF SWITCHED ACCESS SERVICE
6.2.4 FEATURE GROUP D (FGD)

A. Description (Cont'd)

6. The Company will establish a trunk group or groups for the customer at end office switches or access tandem switches where FGD switching is provided. When required by technical limitations, or in the case of *SWITCHNET 56*, a separate trunk group will be established for each type of FGD switching arrangement provided. Different types of FGD or other switching arrangements may be combined in a single trunk group at the option of the Company.

7. The uniform access code for FGD switching is 101XXXX. Uniform access codes (C)
will be the assigned access numbers of all FGD access provided to the customer (T)
by the Company. No access code is required for calls to a customer over FGD Switched Access Service when the end user's telephone exchange service is arranged for Presubscription as set forth in Section 13, following. (T)

   When no access code is required, the number dialed by the customer's end user shall be a 7- or 10- digit number after dialing the prefix 0 or 1 for calls in the North American Numbering Plan (NANP). For calls outside the NANP, and, if the end office is technically equipped for International Direct Distance Dialing (IDDD), a 7- to 15- digit number may be dialed after dialing the prefix 011 or 01.

   When the 101XXXX access code is used, FGD switching also provides for (C)
dialing the digit 0 or 00 for access to the customer's operator, 911 for access to the Company's emergency reporting service, or at the customer's option, the end-of-dialing digit (#) for cut-through access to the customer's premises.

8. When *SWITCHNET 56* is provided with FGD, the standard FGD dialing pattern is used. This dialing pattern may vary according to the technology implemented in each specific U S WEST Communications end office and/or access tandem (i.e., in the originating direction, dialing #56 may be required dependent upon the switching technology.)

9. FGD switching will be arranged to accept calls from telephone exchange service locations without the need for dialing a 101XXXX uniform access code. Each (C)
telephone exchange service line may be marked with a presubscription code to identify the 101XXXX uniform access code its calls will be directed to for (C)
interLATA service. Presubscription codes are applied as set forth in Section 13, following.

6. SWITCHED ACCESS SERVICE

6.2 PROVISION AND DESCRIPTION OF SWITCHED ACCESS SERVICE
6.2.4 FEATURE GROUP D (FGD)

A. Description (Cont'd)

10. The Company will provide 1+ interLATA sent-paid access from equal access end offices to the customer's premises for calls dialed as 1+ and/or 101XXXX 1+ from pay telephones utilizing PAL Service, Smart and Basic, in the following manner. (C)

a. Smart PAL

For traffic originating from a Smart PAL, the customer to whom such calls are routed shall order FGD trunks from equal access end offices to the customer's premises via direct trunks or via Operator Access Tandems, with the Operator Trunk-Full Feature type of transport termination, as set forth in 6.3.2, following. The trunks must be dedicated, and the customer shall specify the number of trunks required at each end office from which the customer will receive 1+ sent-paid traffic.

The customer is responsible for providing all other operator services signaling capabilities, as described in the Operator Services Systems Generic Requirements (OSSGR) Technical Reference FR-271 and the LATA Switching Systems Generic Requirements (LSSGR) Technical Reference FR-64.

When the Company provides Operator Services Signaling (OSS) between an Operator Access Tandem and the customer's premises, the customer will be required to order a separate and final trunk group from the Operator Access Tandem to the customer's premises for each Numbering Plan Area (NPA) within a LATA to identify the originating NPA. Also, the customer must order a separate trunk group for each type of coin control signaling that is utilized among the equal access end offices subtending an Operator Access Tandem.

The Company will not block 101XXXX 1+ calls and will route 101XXXX 1+ interLATA sent-paid traffic in accordance to the end user request. It will be the responsibility of the 101XXXX 1+ dialed carrier to complete the 101XXXX 1+ interLATA sent-paid call or to provide a recorded message to the end user. (C) (C)

6. SWITCHED ACCESS SERVICE

6.2 PROVISION AND DESCRIPTION OF SWITCHED ACCESS SERVICE
6.2.4 FEATURE GROUP D (FGD)

A.10.a. (Cont'd)

The Company will perform normal acceptance testing for sent-paid services for Smart PALs. In addition, the Company will perform testing for coin control and Operator Trunk-Full Feature (i.e., coin collect, coin return, 1+ person-to-person, operator recall, overtime, international direct distance dialing, and information calls). Test tapes must be received from the customer that will be processing the 1+ interLATA sent-paid traffic 45 days prior to the routing of said 1+ traffic to that customer. The Company will provide optional testing, at the request of the customer, as set forth in Section 13, following.

b. Basic PAL

For traffic originating from a Basic PAL, the Company shall provide 1+ interLATA sent-paid access from equal access end offices to the customer's premises via FGD trunks. For traffic originating from a Basic PAL dialed as 1+ and/or 101XXXX 1+, the customer to whom such calls are routed shall order or have existing FGD trunks with ANI optional feature, as set forth in 6.3.1, following. (C)

11. When a customer has had FGB access in an end office and subsequently replaces the FGB access with FGD access, at the mutual agreement of the customer and the Company, the Company will, for a period of 90 days after the installation of the FGD access service (unless the customer requests a shorter period), direct calls dialed by the customer's end users using the customer's previous FGB access code to the customer's FGD access service. The customer must be prepared to handle normally dialed FGD calls as well as calls dialed with the FGB access code which requires the customer to receive additional address signaling from the end user. The customer must be prepared to handle both the FGB and FGD signaling on the same trunks. Such calls will be rated as FGD.

    Should the customer desire to maintain the routing of their FGB access code to their FGD access service past 90 days after the installation of FGD access service, the optional feature of 950 on FGD as set forth in 6.3.1, following, must be ordered.

6. SWITCHED ACCESS SERVICE

6.2 PROVISION AND DESCRIPTION OF SWITCHED ACCESS SERVICE
6.2.4 FEATURE GROUP D (FGD) (Cont'd)

B. Optional Features

1. Switched Transport Optional Features

   - Supervisory Signaling
   - Multiple POP Tandem Sectorization (MPTS) (T)
   - Self Healing Alternate Route Protection (SHARP)

2. Common Switching Optional Features

   - Automatic Number Identification
     - Flexible ANI (BSE)
   - Cut-Through
   - Service Class Routing
   - Alternate Traffic Routing
   - Trunk Access Limitation
   - International Carrier Option
   - *SWITCHNET 56* Service
   - WATS Access Service (WATS)
   - 950 on FGD
   - SS7 Out of Band Signaling
   - Clear Channel Capability (BSE)

6. SWITCHED ACCESS SERVICE

6.2 PROVISION AND DESCRIPTION OF SWITCHED ACCESS SERVICE
6.2.4 FEATURE GROUP D (FGD)

B. Optional Features (Cont'd)

3. Transport Termination Optional Features

- Operator Trunks - (i.e., Coin, Non-Coin or Combined Coin and Non-Coin) (T)

- Operator Trunk-Full Feature

4. Line Termination Optional Features

- Answer Supervision for Use With WATS Access Service.

C. Transmission Performance (T)

FGD is provided with either Transmission Type A1 or Type B1 performance as follows:

- When routed directly to the end office, Transmission Type B1 is provided.

- When routed to an access tandem, only Transmission Type A1 is provided for both the POT-to-access tandem and access tandem-to-end office trunks.

- Overall POT to end office requirements for FGD provide Transmission Type B1 performance whether routed directly with Transmission Type B1 or via an access tandem with Transmission Type A1. (T)

Certain material previously found on this page can now be found on Page 6-145.

6. SWITCHED ACCESS SERVICE

6.2 PROVISION AND DESCRIPTION OF SWITCHED ACCESS SERVICE
6.2.4 FEATURE GROUP D (FGD)

C. Transmission Performance (Cont'd)

Transmission Type B1 performance is provided with Interface Group 1, 2, 6, and 9, as available. Transmission Type A1 performance is provided with Interface Groups 2, 6 and 9, as available.

Voice band data Transmission Type DB1 parameter limits are provided with FGD for the transmission path between the customer's premises and the end office when directly routed to the end office. Voice band data Transmission Type DA1 parameter limits are provided for the transmission path between the customer's premises and the access tandem and between the access tandem and the end office. Voice band data transmission parameter limits are delineated in Technical Reference GR-334-CORE.

D. Testing Capabilities

FGD is provided, in the terminating direction where equipment is available, with seven-digit access to balance (100-type) test line, milliwatt (102-type) test line, nonsynchronous or synchronous test line, automatic transmission measuring (105-type) test line, data transmission (107-type) test line, loop around test line, short circuit test line, open circuit test line and non-inverting digital loopback (108-type) test line.

In addition to the tests described in 6.1.5, preceding, which are included with the installation of service, additional Cooperative Acceptance Testing, Automatic Scheduled Testing, Cooperative Scheduled Testing, or Manual Scheduled Testing, and Non-Scheduled Testing, are available for FGD as set forth in Section 13, following. (T)

6. SWITCHED ACCESS SERVICE

6.2 PROVISION AND DESCRIPTION OF SWITCHED ACCESS SERVICE (Cont'd)

6.2.5 CIRCUIT SWITCHED LINESIDE

A. Description

1. Circuit Switched Lineside (CSL) Access, which is available to all customers, provides a line-side termination to Company end office switches for the customer's use in originating communications from and terminating communications to an Interexchange Carrier's interstate service or a customer-provided interstate communications capability. The customer must specify the Interexchange Carrier to which the CSL Service is connected or, in the alternative, specify the means by which the CSL Access communication is transported to another state. (T)

2. CSL is provided in connection with Company electronic and electromechanical end offices. CSL may be transported via a DS3, DS1 or Voice Grade Entrance Facility and via a DS3, DS1 or Voice Grade DTT facility. When the customer orders CSL and Trunkside Access to be transported via the same DTT facility, DS1 to Voice Grade multiplexing equipment is always required at the end office at the rates and charge set forth in 6.8, following. When the customer does not combine CSL and Trunkside Access on the same facility, the Company will provide DS1 to Voice Grade multiplexing equipment at no charge. At the option of the customer, CSL is provided on a single or multiple line group basis and is arranged for originating calling only, terminating calling only, or two-way calling.

3. CSL provides a line-side termination at the first point of switching. The line-side termination will be provided with either ground-start supervisory signaling or loop-start supervisory signaling. The type of signaling is at the option of the customer.

4. The Company shall select the first point of switching, within the selected LATA, at which the line-side termination is to be provided unless the customer requests a different first point of switching and Company facilities and measurement capabilities are available to accommodate such a request.

6. SWITCHED ACCESS SERVICE

6.2 PROVISION AND DESCRIPTION OF SWITCHED ACCESS SERVICE
6.2.5 CIRCUIT SWITCHED LINESIDE

A. Description (Cont'd)

5. A seven-digit local telephone number assigned by the Company is provided for access to CSL switching in the originating direction. The seven-digit local telephone number will be associated with the selected end office switch and is in the form NXX-XXXX. (T) (T)

   If the customer requests a specific seven-digit telephone number that is not currently assigned, and the Company can, with reasonable effort, comply with that request, the requested number will be assigned to the customer. (T)

6. CSL switching, when used in the terminating direction, is arranged with dial-tone start-dial signaling and dial-pulse address signaling. When used in the terminating direction, CSL switching may, at the option of the customer, be arranged for dual-tone multifrequency (DTMF) address signaling, subject to the availability of the equipment at the first point of switching. When CSL switching is provided in a hunt group or uniform call distribution arrangement, all CSL switching will be arranged for the same type of address signaling.

7. No address signaling is provided by the Company when CSL switching is used in the originating direction. Address signaling in such cases, if required by the customer, must be provided by the customer's end user using inband-tone signaling techniques. Such inband-tone address signals will not be regenerated by the Company and will be subject to the ordinary transmission capabilities of the Switched Transport provided. (T) (T)

6. SWITCHED ACCESS SERVICE

6.2 PROVISION AND DESCRIPTION OF SWITCHED ACCESS SERVICE
6.2.5 CIRCUIT SWITCHED LINESIDE

A. Description (Cont'd)

8. CSL switching, when used in the terminating direction, may be used to access valid NXX codes in the LATA, local operator service (0- and 0+), Voice DA (411 or 555-1212, whichever is available), emergency reporting service (911, where available), exchange telephone repair (611, where available), community information services of an information service provider, and other customers' services (by dialing the appropriate digits). Charges for CSL terminating calls requiring operator assistance, or calls to 611 or 911, will only apply where sufficient call details are available. Additional non-access charges will also be billed on a separate account for: (C)

   a. an operator surcharge, as set forth in the general and/or local exchange tariffs, for local operator assistance (0- and 0+) calls,

   b. calls to certain community information services in accordance with the Information Provider's applicable service rates when the Company performs the billing function for the Information Provider,

   c. calls from an CSL line to another customer's service in accordance with that customer's applicable service rates when the Company performs the billing function for that customer.

9. CSL calls terminating outside of the dial tone office are assessed Tandem Transmission rates in addition to the applicable Switched Access rates when calls are terminated within the dial tone office. Tandem Transmission mileage measurement is described in 6.7.11, following.

(D)

6. SWITCHED ACCESS SERVICE

6.2 PROVISION AND DESCRIPTION OF SWITCHED ACCESS SERVICE
6.2.5 CIRCUIT SWITCHED LINESIDE

A. Description (Cont'd)

10. CSL calls to Voice DA (411 or 555-1212, whichever is available), are subject to the Voice DA Service Call rate as set forth in 9.6.1.A., following, and are not subject to Switched Access rates as set forth in this section. (C)

11. When an CSL switching arrangement for an individual customer (a single line or entire hunt group) is discontinued at an end office, an intercept announcement is provided. This arrangement provides, for a limited period of time, an announcement that the service associated with the number dialed has been disconnected.

12. Use of certain optional features and BSEs, available in B., following, may result in additional usage.

(D)

6. SWITCHED ACCESS SERVICE

6.2 PROVISION AND DESCRIPTION OF SWITCHED ACCESS SERVICE
6.2.5 CIRCUIT SWITCHED LINESIDE (Cont'd)

B. Optional Features and BSEs

1. Switched Transport Optional Features and BSEs.

   - Supervisory Signaling
   - Customer Specified Entry Switch Receive Level

2. Common Switching Optional Features and BSEs.

   - Call Denial
   - Service Code Denial
   - Hunt Group Arrangement (BSE)
   - Uniform Call Distribution Arrangement (BSE)
   - Nonhunting Number for Use with Hunt Group Arrangement or Uniform Call Distribution Arrangement
   - WATS Access Service
   - InterLATA Toll Denial
   - Call Transfer (BSE)
   - Three-Way Calling (BSE)
   - Caller Identification - Number (BSE)
   - Caller Identification - Bulk (BSE)

6. SWITCHED ACCESS SERVICE

6.2 PROVISION AND DESCRIPTION OF SWITCHED ACCESS SERVICE
6.2.5 CIRCUIT SWITCHED LINESIDE

B.2. (Cont'd)

- Message Delivery Service (BSE)
- Message Delivery Service - Interoffice (BSE) (N)
- Make Busy (BSE)
- Call Forwarding Variable (BSE)
- Queuing for Use With UCD (BSE)

3. Transport Termination Optional Features

- Two-way operation with dial-pulse address signaling and loop-start supervisory signaling
- Two-way operation with dial-pulse address signaling and ground-start supervisory signaling
- Two-way operation with dual-tone multifrequency address signaling and loop-start supervisory signaling
- Two-way operation with dual-tone multifrequency address signaling and ground-start supervisory signaling
- Terminating operation with dial-pulse address signaling and loop-start supervisory signaling
- Terminating operation with dial-pulse address signaling and ground-start supervisory signaling
- Terminating operation with dual-tone multifrequency address signaling and loop-start supervisory signaling
- Terminating operation with dual-tone multifrequency address signaling and ground-start supervisory signaling
- Originating operation with loop-start supervisory signaling
- Originating operation with ground-start supervisory signaling

6. SWITCHED ACCESS SERVICE

6.2 PROVISION AND DESCRIPTION OF SWITCHED ACCESS SERVICE
6.2.5 CIRCUIT SWITCHED LINESIDE

B. Optional Features and BSEs (Cont'd)

4. Line Termination Optional Features and BSEs

   - Answer Supervision - Lineside (BSE)

5. Certain other features which may be available in connection with CSL are provided under the Telephone Company's state access tariff and/or local exchange service tariff. These are:

   - Custom Calling Features (excluding Three-Way Calling, Call Transfer, Caller Identification - Number and Call Forwarding Variable)
   - *MARKET EXPANSION LINE*
   - Bill Number Screening
   - IntraLATA extensions
   - Open Switching Interval Protection (OSIP)
   - Message Waiting Indication - Audible

6. SWITCHED ACCESS SERVICE

6.2 PROVISION AND DESCRIPTION OF SWITCHED ACCESS SERVICE
6.2.5 CIRCUIT SWITCHED LINESIDE (Cont'd)

C. Transmission Performance

CSL is provided with either Transmission Type B or Type C performance. The standard parameter limits associated with these Transmission Types are guaranteed to the first point of switching. Transmission Type C performance is provided with Interface Group 1 and Transmission Type B is provided with Interface Groups 2, 6 and 9, as available. Voice band Data Transmission Type DB parameter limits are provided with CSL to the first point of switching as delineated in Technical Reference GR-334-CORE.

D. Testing Capabilities

CSL is provided, in the terminating direction where equipment is available, with seven-digit access to balance (100-type) test line and milliwatt (102-Type) test line. In addition to the tests described in 6.1.5, preceding, which are included with the installation of service, additional Cooperative Acceptance Testing and Non-Scheduled Testing are available as set forth in Section 13, following. (T)

6. SWITCHED ACCESS SERVICE

6.2 PROVISION AND DESCRIPTION OF SWITCHED ACCESS SERVICE (Cont'd)

6.2.6 CIRCUIT SWITCHED TRUNKSIDE

Circuit Switched Trunkside (CST) Access provides Trunkside Access to Company end office switches, either directly via DTT or through a Company designated Switched Access Service tandem switch via TST. (T)

CST Access is provided by three different options. These are differentiated by their technical characteristics, e.g., the manner in which an end user accesses them in originating calls. The options are offered as:

- Circuit Switched Trunkside - Option 1 (CST1)
- Circuit Switched Trunkside - Option 2 (CST2)
- Circuit Switched Trunkside - Option 3 (CST3)

The options are provided as set forth in A., B. and C., following.

A. Circuit Switched Trunkside - Option 1

1. Description

a. Circuit Switched Trunkside - Option 1 (CST1) Access, which is available to all customers, provides a trunk-side termination to Company end office switches for the customer's use in originating communications from and terminating communications to an Interexchange Carrier's interstate service or a customer-provided interstate communications capability. The customer must specify the Interexchange Carrier to which the CST1 Service is connected or, in the alternative, specify the means by which CST1 Access communication is transported to another state. (T)

6. SWITCHED ACCESS SERVICE

6.2 PROVISION AND DESCRIPTION OF SWITCHED ACCESS SERVICE
6.2.6 CIRCUIT SWITCHED TRUNKSIDE

A.1. (Cont'd)

b. CST1, when directly routed to an end office via DTT is provided at appropriately equipped Company electronic end office switches. When provided via Company-designated electronic access tandem switches via TST, CST1 switching is provided at Company electronic and electromechanical end office switches.

c. When CST1 service is directly routed to an end office, the Switched Transport configuration is composed of an Entrance Facility and a DTT facility to an end office. When CST1 is switched through an access tandem, the Switched Transport configuration is composed of an Entrance Facility, a DTT facility between the SWC and the access tandem and TST from the access tandem to the end offices subtending the access tandem. Multiplexing options are described in 6.1.2, preceding. (C) | (C)

d. CST1 is provided as a trunk-side termination through the use of end office or access tandem switch trunk equipment. The switch trunk equipment is provided with wink-start start-pulsing signals and answer-disconnect supervisory signals.

e. CST1 switching is provided with multifrequency (MF) address signaling in both the originating and terminating directions. Address signals and address information required by the customer in the originating direction must be provided by the customer's end user using inband-tone signaling techniques except for switching that has automatic number identification (ANI) or rotary dial station signaling. Such inband-tone address signals will not be regenerated by the Company and will be subject to the ordinary transmission capabilities of the Switched Transport provided.

6. SWITCHED ACCESS SERVICE

6.2 PROVISION AND DESCRIPTION OF SWITCHED ACCESS SERVICE
6.2.6 CIRCUIT SWITCHED TRUNKSIDE

A.1. (Cont'd)

f. The access code for non-8XX CST1 Access Service switching is a uniform access code. The form of the uniform access code is 950-XXXX or 1 + 950-XXXX for carriers. These uniform access codes will be the assigned access numbers of all non-8XX CST1 Access Service provided to the customer by the Company. No access code is required for CST1 switching used to provide 800 DB Access Service. The telephone number dialed by the customer's end users is of the form 1+8XX+NXX-XXXX.

g. CST1 switching, when used in the terminating direction, may be used to access valid NXX codes in the LATA, community information services of an information service provider, and other customers' services (by dialing the appropriate digits). When CST1 is directly routed to an end office via DTT, only those valid NXX codes served by that end office may be accessed. When CST1 is routed through an access tandem, only those valid NXX codes served by end offices subtending the access tandem may be accessed. Additional non- (D)
access charges will also be billed for calls from an CST1 trunk to another customer's service in accordance with that customer's applicable service rates when the Company performs the billing function for that customer. Calls in the terminating direction will not be completed to 101XXXX, 950-XXXX (or 1 + 950-XXXX) access codes, local operator assistance (0- and 0+), Voice DA (411 or 555-1212, where available) and service codes 611 and 911. Calls will be (C)
completed to Voice DA (NPA+555-1212 or 555-1212) when CST1 Switching is (C)
combined with Voice DA Switching. The combination of CST1 Switched Access Service with Voice DA Service is provided as set forth in Section 9, following. CST1 may not be switched, in the terminating direction, to another Trunkside Switched Access Service.

(D)

(D)

6. SWITCHED ACCESS SERVICE

6.2 PROVISION AND DESCRIPTION OF SWITCHED ACCESS SERVICE
6.2.6 CIRCUIT SWITCHED TRUNKSIDE

A.1. (Cont'd)

h. The Telephone Company will establish a trunk group or groups for the customer at end office switches or access tandem switches where CST1 switching is provided. When required by technical limitations, a separate trunk group will be established for each type of CST1 switching arrangement provided. Different types of CST1 or other switching arrangements may be combined in a single trunk group at the option of the Telephone Company.

i. When all CST1 switching arrangements are discontinued at an end office and/or in a LATA, an intercept announcement is provided. This arrangement provides, for a limited period of time, an announcement that the service associated with the number dialed has been disconnected.

2. Optional Features and BSEs

a. Switched Transport Optional Features

- Customer Specification of Local Transport Termination
- Supervisory Signaling
- Customer Specified Entry Switch Receive Level
- Self Healing Alternate Route Protection (SHARP)

6. SWITCHED ACCESS SERVICE

6.2 PROVISION AND DESCRIPTION OF SWITCHED ACCESS SERVICE
6.2.6 CIRCUIT SWITCHED TRUNKSIDE

A.2. (Cont'd)

b. Common Switching Optional Features and BSEs

- Automatic Number Identification (BSE)
- Up to 7-digit Outpulsing of Access Digits to customer
- Alternate Traffic Routing (BSE)
- WATS Access Service (WATS)

c. Line Termination Optional Features

- Answer supervision for use with WATS Access Service

d. Another feature, Bill Number Screening, which may be available in connection with CST1, is provided under the Company's state access tariff and/or local exchange service tariffs. (T)

3. Transmission Performance (T)

CST1 is provided with Transmission Type B1 performance. Transmission Type (T)
B1 standard parameter limits apply to the transmission path routed directly (i.e., (T)
between the customer's premises and the end office) and to each segment of an
access tandem connection. Transmission Type B1 performance is provided with (T)
Interface Group 1, 2, 6 and 9, as available. Voice band data Transmission Type
DB1 parameter limits are provided with CST1 when routed directly and to each
segment of an access tandem connection as delineated in Technical Reference
GR-334-CORE. (T)

6. SWITCHED ACCESS SERVICE

6.2 PROVISION AND DESCRIPTION OF SWITCHED ACCESS SERVICE
6.2.6 CIRCUIT SWITCHED TRUNKSIDE

A. Circuit Switched Trunkside - Option 1 (Cont'd)

4. Testing Capabilities

CST1 is provided, in the terminating direction where equipment is available, with seven-digit access to balance (100-type) test line, milliwatt (102-type) test line, nonsynchronous or synchronous test line, automatic transmission measuring (105-type) test line, data transmission (107-type) test line, loop around test line, short circuit test line and open circuit test line. In addition to the tests described in 6.1.5, preceding, which are included with the installation of service, additional Cooperative Acceptance Testing, Automatic Scheduled Testing, Cooperative Scheduled Testing, Manual Scheduled Testing and Non-Scheduled Testing are available as set forth in Section 13, following. (T)

B. Circuit Switched Trunkside - Option 2

1. Description

a. Circuit Switched Trunkside - Option 2 (CST2) Access, which is available only to providers of MTS and WATS, provides a trunk-side termination to Company end office switches for the customer's use in originating and terminating communications.

b. CST2 is provided at all Company end office switches whether routed directly to an end office or via Company-designated access tandem switches. CST2 switching is provided to the customer (i.e., providers of MTS and WATS) at an end office switch unless CST3 end office switching is provided in the same office. When CST3 switching is available, CST2 switching will not be provided.

c. When CST2 service is directly routed to an end office, the Switched Transport configuration is composed of an Entrance Facility and a DTT facility to an end office. When CST2 is switched through an access tandem, the Switched Transport configuration is composed of an Entrance Facility, a DTT facility between the SWC and the access tandem and TST from the access tandem to the end offices subtending the access tandem. Multiplexing options are described in 6.1.2, preceding.

6. SWITCHED ACCESS SERVICE

6.2 PROVISION AND DESCRIPTION OF SWITCHED ACCESS SERVICE
6.2.6 CIRCUIT SWITCHED TRUNKSIDE

B.1. (Cont'd)

d. CST2 is provided as a trunk-side termination through the use of end office or access tandem switch trunk equipment. The switch trunk equipment is provided with answer and disconnect supervisory signaling. Wink-start, start-pulsing signals are provided in all offices where available. In those offices where wink-start start-pulsing signals are not available, delay-dial start-pulse signaling is provided or immediate dial-pulse address signaling may be provided which allows dial pulses to be forwarded without a start-pulsing signal from the terminating office.

e. CST2 is provided with multifrequency (MF) address signaling except in certain electromechanical end office switches where multifrequency signaling is not available. In such switches, the address signaling will be dial-pulse, or immediate dial pulse, whichever is available. Up to 12-digits of the called party number will be forwarded by Company equipment to the customer's premises. Such called party number signals will be subject to the ordinary transmission capabilities of the Switched Transport provided.

f. No access code is required for CST2 switching. For calls in the North American Numbering Plan (NANP), a 7- or 10- digit number may be dialed by the customer's end user after dialing the prefix 0 or 1. For calls outside the NANP, and, if the end office is technically equipped for International Direct Distance Dialing (IDDD), a 7- to 15- digit number may be dialed after dialing the prefix 011 or 01. (T)

6. SWITCHED ACCESS SERVICE

6.2 PROVISION AND DESCRIPTION OF SWITCHED ACCESS SERVICE
6.2.6 CIRCUIT SWITCHED TRUNKSIDE

B.1. (Cont'd)

g. CST2 switching, when used in the terminating direction, may be used to access valid NXX codes in the LATA, community information services of an information provider, and other customers' services (by dialing the appropriate codes) when the services can be reached using valid NXX codes. When CST2 is directly routed to an end office via DTT, only those valid NXX codes served by that office may be accessed. When CST2 is routed through an access tandem, only those valid NXX codes served by offices subtending the access tandem may be accessed. (D)

Additional non-access charges will also be billed for calls from a CST2 trunk to another customer's service in accordance with that customer's applicable service rates when the Company performs the billing function for that customer. Calls in the terminating direction will not be completed to 101XXXX, 950-XXXX (or 1 + 950-XXXX) access codes, local operator assistance (0-and 0+), Voice DA (411 or 555-1212) and service codes 611 and 911. Calls will be completed to (C)
Voice DA (NPA+555-1212 or 555-1212) when CST2 switching is combined (C)
with Voice DA switching. The combination of CST2 Switched Access Service with Voice DA Service is provided as set forth in Section 9, following. CST2 may not be switched, in the terminating direction, to another Trunkside Switched Access Service.

h. The Company will establish a trunk group or groups for the customer at end office switches or access tandem switches where CST2 switching is provided. When required by technical limitations, a separate trunk group will be established for each type of CST2 switching arrangement provided. Different types of CST2 or other switching arrangements may be combined in a single trunk group at the option of the Company.

(D)

(D)

6. SWITCHED ACCESS SERVICE

6.2 PROVISION AND DESCRIPTION OF SWITCHED ACCESS SERVICES
6.2.6 CIRCUIT SWITCHED TRUNKSIDE

B.1. (Cont'd)

i. The Company will provide 1+ interLATA sent-paid access from pay telephones utilizing Smart Public Access Lines via CST2 for calls dialed as 1+ and/or 101XXXX 1+ in the following manner. 1+ interLATA sent-paid access from pay telephones utilizing Basic Public Access Line Service shall be provided by FGD or CST3. (C)

(1) Smart PAL

For traffic originating from a Smart PAL, the customer to whom such calls are routed shall order CST2 trunks from end offices to the customer's premises via direct trunks or via Operator Access Tandems, with the Operator Trunk-Full Feature type of transport termination, as set forth in 6.3.2, following. The trunks must be dedicated, and the customer shall specify the number of trunks required at each end office from which the customer will receive 1+ sent-paid traffic.

The customer is responsible for providing all other operator services signaling capabilities, as described in the Operator Services Systems Generic Requirements (OSSGR) Technical Reference FR-271 and the LATA Switching Systems Generic Requirements (LSSGR) Technical Reference FR-64.

When the Company provides Operator Services Signaling (OSS) between an Operator Access Tandem and the customer's premises, the customer will be required to order a separate and final trunk group from the Operator Access Tandem to the customer's premises for each Numbering Plan Area (NPA) within a LATA to identify the originating NPA. Also, the customer must order a separate trunk group for each type of coin control signaling that is utilized among the equal access end offices subtending an Operator Access Tandem.

The Company will not block 101XXXX 1+ calls and will route 101XXXX 1+ interLATA sent-paid traffic in accordance to the end user request. It will be the responsibility of the 101XXXX 1+ dialed carrier to complete the casual 101XXXX 1+ interLATA sent-paid call or to provide a recorded message to the end user. (C) (C) (C)

6. SWITCHED ACCESS SERVICE

6.2 PROVISION AND DESCRIPTION OF SWITCHED ACCESS SERVICES

6.2.6 CIRCUIT SWITCHED TRUNKSIDE (T)

B.1.i.(1) (Cont'd) (T)

The Company will perform normal acceptance testing for sent-paid services for Smart PALs. In addition, the Company will perform testing for coin control and Operator Trunk-Full Feature (i.e., coin collect, coin return, 1+ person-to-person, operator recall, overtime, international direct distance dialing, and information calls). Test tapes must be received from the customer that will be processing the 1+ interLATA sent-paid traffic 45 days prior to the routing of said 1+ traffic to that customer. The Company will provide optional testing, at the request of the customer, as set forth in Section 13, following. (T)

6. SWITCHED ACCESS SERVICE

6.2 PROVISION AND DESCRIPTION OF SWITCHED ACCESS SERVICE
6.2.6 CIRCUIT SWITCHED TRUNKSIDE

B. Circuit Switched Trunkside - Option 2 (Cont'd)

2. Optional Features and BSEs

a. Switched Transport Optional Features

- Supervisory Signaling
- Multiple POP Tandem Sectorization (MPTS) (T)
- Self Healing Alternate Route Protection (SHARP).

b. Common Switching Optional Features and BSEs

- Automatic Number Identification (BSE)
- Delay-Dial Start Pulsing Signaling
- Immediate Dial Pulse Address Signaling
- Dial Pulse Address Signaling
- Service Class Routing
- Alternate Traffic Routing (BSE)
- Trunk Access Limitation
- WATS Access Service (WATS)

6. SWITCHED ACCESS SERVICE

6.2 PROVISION AND DESCRIPTION OF SWITCHED ACCESS SERVICE
6.2.6 CIRCUIT SWITCHED TRUNKSIDE

B.2. (Cont'd)

c. Transport Termination Optional Features

Operator Trunks - (i.e., Coin, Non-Coin or Combined Coin and Non-Coin) (T)

d. Line Termination Optional Features and BSEs

- Answer Supervision for Use With WATS Access Service.

3. Transmission Performance (T)

CST2 is provided with Transmission Type B1 performance. Transmission Type B1 standard parameter limits apply to the transmission path routed directly (i.e., between the customer's premises and the end office) and to each segment of an access tandem connection. Transmission Type B1 performance is provided with Interface Group 1, 2, 6 and 9, as available. Voice band data Transmission Type DB1 parameter limits are provided with CST2 when directly routed and to each segment of an access tandem connection as delineated in Technical Reference GR-334-CORE. (T) (T)

Certain material previously found on this page can now be found on Page 6-145.

Certain material found on this page formerly appeared on Page 6-84.

6. SWITCHED ACCESS SERVICE

6.2 PROVISION AND DESCRIPTION OF SWITCHED ACCESS SERVICE
6.2.6 CIRCUIT SWITCHED TRUNKSIDE

B. Circuit Switched Trunkside - Option 2 (Cont'd)

4. Testing Capabilities

CST2 is provided, in the terminating direction where equipment is available, with seven-digit access to balance (100-type) test line, milliwatt (102-type) test line, nonsynchronous or synchronous test line, automatic transmission measuring (105-type) test line, data transmission (107-type) test line, loop around test line, short circuit test line and open circuit test line. In addition to the tests described in 6.1.5, preceding, which are included with the installation of service, additional Cooperative Acceptance Testing, Automatic Scheduled Testing, Cooperative Scheduled Testing or Manual Scheduled Testing, and Non-Scheduled Testing are available as set forth in Section 13, following, for CST2. (T)

C. Circuit Switched Trunkside - Option 3

1. Description

a. Circuit Switched Trunkside - Option 3 (CST3) is provided at Company-designated end office switches whether routed directly to an end office or via Company-designated electronic access tandem switches. CST3 is also provided at Company equal access end office switches that subtend a TSP's premises when the DTT facility is quipped with TSI.

b. CST3, which is available to all customers, provides a trunk-side termination through the use of end office or access tandem switch trunk equipment. Wink-start, start-pulsing and answer-supervisory signaling are sent by the terminating office. Disconnect-supervisory signaling is sent from the originating or terminating office. When CST3 uses SS7 out of band signaling, no signaling will be done via the message channel.

6. SWITCHED ACCESS SERVICE

6.2 PROVISION AND DESCRIPTION OF SWITCHED ACCESS SERVICE
6.2.6 CIRCUIT SWITCHED TRUNKSIDE

C.1. (Cont'd)

c. When CST3 service is directly routed to an end office, the Switched Transport configuration is composed of an Entrance Facility and a DTT facility to an end office. When CST3 is switched through an access tandem, the Switched Transport configuration is composed of an Entrance Facility, a DTT facility between the SWC and the access tandem and TST from the access tandem to the end offices subtending the access tandem. Multiplexing options are described in 6.1.2, preceding.

d. CST3 switching is provided with multifrequency address signaling or SS7 out of band signaling. With multifrequency address signaling, up to 12 digits of the called party number dialed by the customer's end user using dual tone multifrequency or dial pulse address signals will be provided by Telephone Company equipment to the customer's premises where the Switched Access Service terminates. Such address signals will be subject to the ordinary transmission capabilities of the Switched Transport provided. With SS7 out of band signaling, up to 12 digits of the called party number dialed by the customer’s end user using dual tone multifrequency or dial pulse address signals is provided by the Company equipment to the customer’s designated premises via CCSAC links. SS7 out of band signaling requires the customer to order the SS7 out of band signaling optional feature, as set forth in 6.3, following, and CCSAC Service as set forth Section 20, following. (T) (T) (T)

e. CST3 switching, when used in the terminating direction, may be used to access valid NXXs in the LATA, community information services of an information service provider, and other customer services (by dialing the appropriate codes) when such services can be reached using valid NXX codes. When directly routed to an end office via DTT, only those valid NXX codes served by that office may be accessed. When routed through an access tandem, only those valid NXX codes served by end offices subtending the access tandem may be accessed.

   Terminating CST3, when tandem routed, may also, at the option of the customer, access valid NXX codes served by offices in which originating CST3 is not available. Rating of this optional service is as set forth in 6.7.1.D.1., following.

6. SWITCHED ACCESS SERVICE

6.2 PROVISION AND DESCRIPTION OF SWITCHED ACCESS SERVICE
6.2.6 CIRCUIT SWITCHED TRUNKSIDE

C.1.e. (Cont'd)

Additional non-access charges will also be billed for calls from an CST3 trunk to another customer's service in accordance with that customer's applicable service rates when the Company performs the billing function for that customer. Calls in the terminating direction will not be completed to 101XXXX, 950-XXXX (or 1 + 950-XXXX) access codes, local operator assistance (0- and 0+), Voice DA (411 or 555-1212) and service codes 611 and 911. Calls will be completed to (C)
Voice DA (NPA+555-1212 or 555-1212) when CST3 switching is combined (C)
with Voice DA Switching. The combination of CST3 Switched Access Service with Voice DA Service is provided as set forth in Section 9, following. CST3 may not be switched, in the terminating direction, to another Trunkside Switched Access Service.

f. The Company will establish a trunk group or groups for the customer at end office switches or access tandem switches where CST3 switching is provided. When required by technical limitations, or in the case of *SWITCHNET 56*, a separate trunk group will be established for each type of CST3 switching arrangement provided. Different types of CST3 or other switching arrangements may be combined in a single trunk group at the option of the Company.

g. The uniform access code for CST3 switching is 101XXXX. The Company (T)
assigns uniform access codes for all CST3 access provided to the customer. No (T)
access code is required for calls to a customer over CST3 Switched Access Service when the end user's telephone exchange service is arranged for presubscription as set forth in Section 13, following.

When no access code is required, the number dialed by the customer's end user shall be a 7- or 10- digit number after dialing the prefix 0 or 1 for calls in the North American Numbering Plan (NANP). For calls outside the NANP, and, if the end office is technically equipped for International Direct Distance Dialing (IDDD), a 7- to 15- digit number may be dialed after dialing the prefix 011 or 01.

(D)

(D)

6. SWITCHED ACCESS SERVICE

6.2 PROVISION AND DESCRIPTION OF SWITCHED ACCESS SERVICE
6.2.6 CIRCUIT SWITCHED TRUNKSIDE

C.1.g. (Cont'd)

When the 101XXXX uniform access code is used, CST3 switching also provides for dialing the digit 0 or 00 for access to the customer's operator, 911 for access to the Company's emergency reporting service, or at the customer's option, the end-of-dialing digit (#) for cut-through access to the customer's premises. (C)

h. When *SWITCHNET 56* is provided with CST3, the standard CST3 dialing pattern is used. This dialing pattern may vary according to the technology implemented in each specific U S WEST Communications end office and/or access tandem (i.e., in the originating direction, dialing #56 may be required dependent upon the switching technology.)

i. CST3 switching will be arranged to accept calls from telephone exchange service locations without the need for dialing a 101XXXX uniform access code. (C) Each telephone exchange service line may be marked with a presubscription code to identify the 101XXXX uniform access code its calls will be directed to (C) for interLATA service. Presubscription codes are applied as set forth in Section 13, following.

j. The Company will provide 1+ interLATA sent-paid access from equal access end offices to the customer's premises for calls dialed as 1+ and/or (C) 101XXXX 1+ from pay telephones utilizing PAL Service, Smart and Basic, in the following manner.

(1) Smart PAL

For traffic originating from a Smart PAL, the customer to whom such calls are routed shall order CST3 trunks from equal access end offices to the customer's premises via direct trunks or via Operator Access Tandems, with the Operator Trunk-Full Feature type of transport termination, as set forth in 6.3.2, following. The trunks must be dedicated, and the customer shall specify the number of trunks required at each end office from which the customer will receive 1+ sent-paid traffic.

The customer is responsible for providing all other operator services signaling capabilities, as described in the Operator Services Systems Generic Requirements (OSSGR) Technical Reference FR-271 and the LATA Switching Systems Generic Requirements (LSSGR) Technical Reference FR-64.

6. SWITCHED ACCESS SERVICE

6.2 PROVISION AND DESCRIPTION OF SWITCHED ACCESS SERVICE
6.2.6 CIRCUIT SWITCHED TRUNKSIDE

C.1.j.(1) (Cont'd)

When the Company provides Operator Services Signaling (OSS) between an Operator Access Tandem and the customer's premises, the customer will be required to order a separate and final trunk group from the Operator Access Tandem to the customer's premises for each Numbering Plan Area (NPA) within a LATA to identify the originating NPA. Also, the customer must order a separate trunk group for each type of coin control signaling that is utilized among the equal access end offices subtending an Operator Access Tandem.

The Company will not block 101XXXX 1+ calls and will route 101XXXX 1+ interLATA sent-paid traffic in accordance to the end user request. It will be the responsibility of the 101XXXX 1+ dialed carrier to complete the casual 101XXXX 1+ interLATA sent-paid call or to provide a recorded message to the end user. (C) (C) (C)

The Company will perform normal acceptance testing for sent-paid services for Smart PALs. In addition, the Company will perform testing for coin control and Operator Trunk-Full Feature (i.e., coin collect, coin return, 1+ person-to-person, operator recall, overtime, international direct distance dialing, and information calls). Test tapes must be received from the customer that will be processing the 1+ interLATA sent-paid traffic 45 days prior to the routing of said 1+ traffic to that customer. The Company will provide optional testing, at the request of the customer, as set forth in Section 13, following.

(2) Basic PAL

For traffic originating from a Basic PAL, the Company shall provide 1+ interLATA sent-paid access from equal access end offices to the customer's premises via CST3 trunks. For traffic originating from a Basic PAL dialed as 1+ and/or 101XXXX 1+, the customer to whom such calls are routed shall order or have existing CST3 trunks with ANI optional feature, as set forth in 6.3.1, following. (C)

6. SWITCHED ACCESS SERVICE

6.2 PROVISION AND DESCRIPTION OF SWITCHED ACCESS SERVICE
6.2.6 CIRCUIT SWITCHED TRUNKSIDE

C.1. (Cont'd)

k. When a customer has had CST1 access in an end office and subsequently replaces the CST1 access with CST3 access, at the mutual agreement of the customer and the Company, the Company will, for a period of 90 days after the installation of the CST3 access service (unless the customer requests a shorter period), direct calls dialed by the customer's end users using the customer's previous CST1 access code to the customer's CST3 access service. The customer must be prepared to handle normally dialed CST3 calls as well as calls dialed with the CST1 access code which requires the customer to receive additional address signaling from the end user. The customer must be prepared to handle both the CST1 and CST3 signaling on the same trunks. Such calls will be rated as CST3. (T) (M)

Should the customer desire to maintain the routing of their CST1 access code to their CST3 access service past 90 days after the installation of CST3 access service, the optional feature of 950 on CST3 as set forth in 6.3.1, following, must be ordered. (M)

Certain material on this page formerly appeared on Page 6-87.1.

6. SWITCHED ACCESS SERVICE

6.2 PROVISION AND DESCRIPTION OF SWITCHED ACCESS SERVICE
6.2.6 CIRCUIT SWITCHED TRUNKSIDE

C. Circuit Switched Trunkside - Option 3 (Cont'd)

2. Optional Features and BSEs

a. Switched Transport Optional Features

- Supervisory Signaling
- MPTS
- Self Healing Alternate Route Protection (SHARP)

b. Common Switching Optional Features and BSEs

- Automatic Number Identification (BSE)
  - Flexible ANI (BSE)
- Cut-Through
- Service Class Routing
- Alternate Traffic Routing (BSE)
- Trunk Access Limitation
- International Carrier Option
- *SWITCHNET 56* Service
- WATS Access Service (WATS)
- 950 on CST3
- SS7 Out of Band Signaling
- Clear Channel Capability (BSE)

6. SWITCHED ACCESS SERVICE

6.2 PROVISION AND DESCRIPTION OF SWITCHED ACCESS SERVICE
6.2.6 CIRCUIT SWITCHED TRUNKSIDE

C.2. (Cont'd)

c. Transport Termination Optional Features

- Operator Trunks - (i.e., Coin, Non-Coin and Combined Coin or Non-Coin) (T)
- Operator Trunk - Full Feature (T)

d. Line Termination Optional Features

- Answer Supervision for Use With WATS Access Service

3. Transmission Performance (T)

CST3 is provided with either Transmission Type A1 or Type B1 performance as follows:

- When routed directly to the end office, Transmission Type B1 is provided.
- When routed to an access tandem, only Transmission Type A1 is provided for both the POT-to-access tandem and access tandem-to-end office trunks.
- Overall POT to end office requirements for CST3 provide Transmission Type B1 performance whether routed directly with Transmission Type B1 or via an access tandem with Transmission Type A1. (T)

Certain material previously found on this page can now be found on Page 6-145.

6. SWITCHED ACCESS SERVICE

6.2 PROVISION AND DESCRIPTION OF SWITCHED ACCESS SERVICE
6.2.6 CIRCUIT SWITCHED TRUNKSIDE

C.3. (Cont'd)

Transmission Type B1 performance is provided with Interface Group 1, 2, 6, and 9, as available. Transmission Type A1 performance is provided with Interface Groups 2, 6 and 9, as available.

Voice band data Transmission Type DB1 parameter limits are provided with CST3 for the transmission path between the customer's premises and the end office when directly routed to the end office. Voice band data Transmission Type DA1 parameter limits are provided for the transmission path between the customer's premises and the access tandem and between the access tandem and the end office. Voice band data transmission parameter limits are delineated in Technical Reference GR-334-CORE.

4. Testing Capabilities

CST3 is provided, in the terminating direction where equipment is available, with seven-digit access to balance (100-type) test line, milliwatt (102-type) test line, nonsynchronous or synchronous test line, automatic transmission measuring (105-type) test line, data transmission (107-type) test line, loop around test line, short circuit test line, open circuit test line and non-inverting digital loopback (108-type) test line.

In addition to the tests described in 6.1.5, preceding, which are included with the installation of service, additional Cooperative Acceptance Testing, Automatic Scheduled Testing, Cooperative Scheduled Testing, or Manual Scheduled Testing, and Non-Scheduled Testing, are available for CST3 as set forth in (T)
Sections13, following. (T)

6. SWITCHED ACCESS SERVICE

6.2 PROVISION AND DESCRIPTION OF SWITCHED ACCESS SERVICE (Cont'd)

6.2.7 DIRECT-INWARD-DIAL (*DID*) SWITCHED ACCESS SERVICE

AVAILABLE IN ID (SPOKANE LATA), OR, WA ONLY

A. Description

1. *DID* switching is provided as trunkside switching with line treatment via DTT. The switch trunk equipment is provided with wink start start-pulsing signals and answer and disconnect supervisory signaling.

2. *DID* Switched Access Service is provided with Multifrequency (MF), Dual-Tone Multifrequency (DTMF) or Dial-Pulse (DP) address signaling when provided at suitably equipped electronic end offices. No other address signaling is provided by the Company. Additional address signaling, if required by the customer, must (T)
be provided by the customer's end user using inband tone signaling techniques. Such inband tone address signals will not be regenerated by the Company and (T)
will be subject to the ordinary transmission capabilities of the Switched Transport provided.

3. *DID* switching is only available in the originating direction. *DID* Switched (C)
Access Service is not available with a DTT facility equipped with Tandem
Signaling Information. (C)

4. The Company will establish a trunk group or groups for the customer at end (T)
office switches where *DID* Switched Access Service is provided.

5. *DID* is available as a bundled Switched Access Service or an unbundled basic serving arrangement (BSA). *DID* provided on an unbundled basis is available with the BSE, Called Directory Number Delivery (CDND) as described in 6.3.1, following, at the rates set forth in 6.8.1. The BSA Switched Access *DID* is subject to the LS3 rates and the bundled *DID* Switched Access Service is subject to the LS1 rates as set forth in 6.1.2.B., preceding.

6. SWITCHED ACCESS SERVICE

6.2 PROVISION AND DESCRIPTION OF SWITCHED ACCESS SERVICE
6.2.7 DIRECT-INWARD-DIAL (*DID*) SWITCHED ACCESS SERVICE (Cont'd) (T)

B. Optional Features

1. Common Switching Optional Features and BSEs

a. Up to seven-digit outpulsing of called party telephone number to customer (This option is available with bundled *DID* Service only.)

b. Called Directory Number Delivery-BSE (This option is available with unbundled *DID* Service only.)

c. MF, DTMF or DP address signaling (These options are available with bundled or unbundled *DID* Service.)

d. *DID* Trunk Queuing - BSE (This option is available with bundled or unbundled *DID* Service).

2. Other features which may be available in connection with *DID* are provided under the Telephone Company's state and/or local exchange service tariffs. These are:

a. Billed Number Screening (This option is available with bundled or unbundled *DID* Service.)

b. Blocks of telephone numbers, originating only (This option is available with bundled or unbundled *DID* Service.)

C. Transmission Specifications

DID is provided with either Type B or Type C Transmission Specifications. The specifications for the associated parameters are guaranteed to the end office. Type C Transmission Specifications are provided with Interface Group 1 and Type B is provided with Interface Groups 2 and 6. Data Transmission Performance Type DB is provided with *DID* to the first point of switching.

6. SWITCHED ACCESS SERVICE

6.2 PROVISION AND DESCRIPTION OF SWITCHED ACCESS SERVICE
6.2.7 DIRECT-INWARD-DIAL (*DID*) SWITCHED ACCESS SERVICE (Cont'd)

D. Testing Capabilities

In addition to the tests described in 6.1.5, preceding, which are included with the installation of service, additional Cooperative Acceptance Testing, Automatic Scheduled Testing, Cooperative Scheduled Testing, Manual Scheduled Testing and Non-Scheduled Testing are available as set forth in Section 13, following. (T)

6.2.8 800 DATA BASE ACCESS SERVICE

A. General Description

800 Data Base (800 DB) Access Service is an originating service utilizing Trunkside Access which provides for the forwarding of end user dialed 8XX-NXX-XXXX calls to a customer based on the dialed 8XX number. The basic query includes the 8XX number identification and the appropriate area of service routing for an 800 number based on the geographic origination of the call. The 800 customer may choose to have a call delivered to a single carrier termination or multiple carrier terminations based on a specific LATA, NPA, NPA/NXX, or up to any combination of the same.

800 DB Access Service must be ordered to all end offices in a LATA and provisioned, at a minimum, to all access tandems[1] and operator switches equipped as SSPs within a LATA. If the customer is utilizing another carrier's facilities to meet the LATA-wide minimum requirement, the customer must provide a letter signed by the access customer ordering the 800 DB Service and the partnering carrier indicating LATA-wide coverage. In addition, the provision of 800 DB Access Service requires the customer's direct access to the Service Management System/800 (SMS/800), or as an alternative, the provision of such service by a Responsible Organization in accordance with the Guidelines for 800 Data Base.

When an 8XX call is originated by an end user, the Company will perform the customer identification function based on the dialed digits and the geographic origination of the call to determine the customer location to which the call is to be routed in accordance with SMS/800 information residing in the Company's Service Control Point (SCP).

[1] 800 DB Access Service is not provided via a DTT facility equipped with Tandem Signaling Information.

6. SWITCHED ACCESS SERVICE

6.2 PROVISION AND DESCRIPTION OF SWITCHED ACCESS SERVICE
6.2.8 800 DATA BASE ACCESS SERVICE

A. General Description (Cont'd)

The customer has the option of having the dialed 8XX number (i.e., 8XX-NXX-XXXX) or the translated Plain Old Telephone Service (POTS) number (i.e., NPA-NXX-XXXX) delivered. If the translated POTS number is delivered, the customer must request the POTS Translation vertical feature through the Responsible Organization as described in B., following. The service provider will be unable to determine that such calls originated as 1+8XX-NXX-XXXX dialed calls unless the customer also orders the Automatic Number Identification (ANI) feature through the Company as described in 6.3.1, following. (M) (M)

800 DB Access Service provided from an equal access end office will be provisioned from the SSP switch as CST3 or Feature Group D. Calls originating from end offices not equipped with equal access capabilities will be converted at the SSP switch to standard CST3 or Feature Group D format.

When the customer orders 800 DB Access Service for the transmission of both voice and data traffic, the customer must order Clear Channel Capability (CCC) for provisioning of its data traffic.

The customer's 8XX voice or data traffic may be combined in the same trunk group arrangement with the customer's non-8XX Access Service voice or data traffic or provisioned on a separate trunk group, unless prohibited by technical limitations.

Measurement of 800 DB Access Service usage shall be in accordance with the regulations set forth in 6.7.7, following for Trunkside Access. Specifically, 800 DB Access Service originating usage, whether combined with non-8XX Access Service usage on trunk groups or provided using dedicated trunk groups, shall be measured in the same manner as specified for non-8XX Access Service usage over Trunkside Access.

The Company must be notified twenty-four (24) hours prior to any media stimulation. The Company maintains the right to apply protective controls, i.e., those actions such as call gapping, to ensure the provisioning of acceptable service to all telecommunications users of the Company's network services.

Application of rates for 800 DB Access Service shall be as set forth in 6.7.1, following.

Certain material on this page formerly appeared on Page 6-93.

6. SWITCHED ACCESS SERVICE

6.2 PROVISION AND DESCRIPTION OF SWITCHED ACCESS SERVICE
6.2.8 800 DATA BASE ACCESS SERVICE (Cont'd) (T)

B. Vertical Features

In addition to the basic carrier identification function, 800 DB Access Service subscribers may request vertical features through a Responsible Organization in accordance with the SMS/800 User Guide. Vertical features will be maintained (T) within the Company's SCP when technically feasible. The POTS Translation feature is described in 1., following, and the Call Handling and Destination Features are described in 2., following.

1. POTS Translation

The POTS Translation vertical feature provides the option of having the ten-digit POTS number (i.e., NPA-NXX-XXXX) delivered instead of the 8XX dialed number (i.e., 8XX-NXX-XXXX) delivered to the service provider. If the POTS Translation feature is requested through the Responsible Organization, the service provider will be unable to determine that such calls originated as 1+8XX-NXX-XXXX dialed calls unless the service provider also orders, through the Company, the Automatic Number Identification (ANI) optional feature as described in 6.3.1, following. ANI information digit twenty-four (24) indicates that the call originated as an 8XX dialed call and is delivered when the ANI optional feature is ordered.

A POTS Translation Charge as described in 6.7.1, following, is assessed to the service provider for each 8XX call delivered.

6. SWITCHED ACCESS SERVICE

6.2 PROVISION AND DESCRIPTION OF SWITCHED ACCESS SERVICE
6.2.8 800 DATA BASE ACCESS SERVICE

B. Vertical Features (Cont'd)

2. Call Handling and Destination Features

Call Handling and Destination Features allow service subscribers variable routing options by specifying a single carrier, multiple carriers (Exchange and/or Interexchange Carriers), single termination or multiple terminations. Multiple terminations for the variable routing options require the POTS Translation feature described in 1., preceding. The following variable routing options are available. (T)

- Routing by Originating Telephone Number (NPA-NXX-XXXX) (C)
- Time of Day
- Day of Week
- Specific Date
- Allocation by Percentage

Routing by originating telephone number (NPA-NXX-XXXX), where technically feasible, allows a service subscriber to specify one or more multiple terminations with a single carrier and/or multiple carriers (Exchange and/or Interexchange Carriers) based on where a call originates. (C)

Time of Day/Day of Week allows a service subscriber to specify one or more multiple terminations with a single carrier and/or multiple carriers (Exchange and/or Interexchange Carriers) based on time of day or day of week the call originates.

Specific Date allows the service subscriber to specify alternate service routes with the date the call originates. These calls can be routed to one of multiple terminations, with a single carrier and/or multiple carriers (Exchange and/or Interexchange Carriers).

Allocation by Percentage allows the service subscriber to specify by percentage the calls to be allocated to multiple terminations and/or multiple carriers (Exchange and/or Interexchange Carriers).

A Call Handling and Destination Feature Query Charge as described in 6.7.1, following, is assessed to the service provider for each 8XX query to the SCP which utilizes one or more of the Call Handling and Destination Features.

6. SWITCHED ACCESS SERVICE

6.2 PROVISION AND DESCRIPTION OF SWITCHED ACCESS SERVICE (Cont'd)

6.2.9 900 ACCESS SERVICE

900 Access Service is an originating service utilizing Trunkside Switched Access Service. The service provides a customer identification function based on the dialed NXX. When a 1+900+NXX-XXXX or 0+900+NXX-XXXX call is originated by the end user, the Company will determine, based on the NXX dialed, the customer to which the 900 call is to be routed. This six-digit routing function will be performed at suitably equipped end office and access tandem switches as determined by the Company.

The manner in which 900 Access Service is provisioned is dependent on the status of the end office which serves the end user customer who places a 900 call (i.e., equipped or not equipped with equal access capability) and/or the status of the customer (i.e., MTS/WATS provider or MTS/WATS-type provider). When 900 Access Service is provided from an end office equipped with equal access capability, all such service will be provisioned as CST3, Feature Group D or 900 Access Service (FGB-Like). When 900 Access Service is provided from an end office not equipped with equal access capability, such service will be provisioned as CST2, Feature Group C or 900 Access Service (FGB-Like) utilizing traditional signaling with answer supervision.

900 Access Service is available only as a LATA wide service and must be provisioned to all offices within the LATA. 900 Access Service may be provisioned with 1+900+NXX-XXXX dialing capability or expanded to include 0+900+NXX-XXXX dialing capability. The Expanded 900 Option is not offered without 1+900 Access Service within a LATA and is available only with CST3 or Feature Group D Service in suitably equipped Company end offices.

6. SWITCHED ACCESS SERVICE

6.2 PROVISION AND DESCRIPTION OF SWITCHED ACCESS SERVICE
6.2.9 900 ACCESS SERVICE (Cont'd)

Calls originating in a LATA in which the customer has not ordered 900 Access Service will be blocked. Only customers who order the Expanded 900 (i.e., 0+900+NXX-XXXX) Option will be able to receive 0+900 calls to NXX codes assigned to them. In addition, calls originating in a LATA for which 900 Access Service has been established will be blocked utilizing the blocking specifications as follows:

- 1+900+NXX-XXXX will be blocked from coin telephones (except customer owned coin operated telephones), 0+ 101XXXX, Inmate Service, Hotel/Motel Service (except those with customer-owned rating services). (C)

- 0+900+NXX-XXXX will be blocked from 101XXXX and Inmate Service. (C)

At the option of the customer, 900 Access Service traffic may be collected at suitably equipped end offices and/or access tandems. However, the customer must collect 900 traffic at all access tandems within the LATA. Network constraints do not permit multiple tandem arrangements for routing of 900 traffic.

6. SWITCHED ACCESS SERVICE

6.2 PROVISION AND DESCRIPTION OF SWITCHED ACCESS SERVICE
6.2.9 900 ACCESS SERVICE (Cont'd)

For 900 Access Service provisioned as CST2, CST3, Feature Group C or D, the customer may establish a separate trunk group or combine 900 traffic with other traffic types for access from suitably equipped end offices and access tandems. For 900 Access Service provisioned with traditional signaling and answer supervision, network limitations requires routing of 900 traffic from suitably equipped end offices and access tandems via a dedicated trunk group. However, this dedicated trunk group may have a combination of 500 traffic and 900 traffic when both Access Services (i.e., 500 and 900) are provisioned from an access tandem with traditional signaling and answer supervision.

Measurement of 900 Access Service usage shall be in accordance with the regulations set forth in 6.7.7, following, for CST2, CST3, Feature Group C and D. Specifically, 900 Access Service originating usage shall be measured in the same manner as that specified for CST2, CST3, Feature Group C and D, whether provisioned separately (i.e., dedicated trunk group) or combined with other traffic types. (T)

The Company must be notified 24 hours prior to any media stimulation. The Company maintains the right to apply protective controls, i.e., those actions such as call gapping, to ensure the provisioning of acceptable service to all telecommunications users of the Company's network services.

The nonrecurring charges for 900 Access Service are described in 6.7.1., following. (T)

6. SWITCHED ACCESS SERVICE

6.2 PROVISION AND DESCRIPTION OF SWITCHED ACCESS SERVICE (Cont'd)

6.2.10 DEDICATED NETWORK ACCESS LINK (DNAL)

A. Service Description

The Switched Transport Dedicated Network Access Link provides a connection between the customer-designated premises and a Company switch or central office for the control of features and functions, or for the transfer of data from the switch or central office to the customer. The DNAL is used in conjunction with Switched Access Services or central office based services requiring a separate link for transmitting signaling or control information. Central office based services require connection to equipment in a central office that is not part of the central office switch. For example, service that requires a separate specialized switch or a modem. The Switched Access Service determines the requirement for speed, type, and number of DNALs. (T)

The Company will provide the Transport Facility and the Transport Termination for the DNAL from available inventory. DNAL may not utilize existing Entrance Facilities or DTT facilities specified by the customer. (T)

The DNAL is only subject to the DNAL rates and charges as set forth in 6.8.1.F., following, and is not subject to usage rates or other Switched Transport monthly rate elements.

B. Transport Facility

1. DNAL Requirements for the Make Busy Arrangement (N)

The DNAL provided for the Make Busy Arrangement, a Low Speed Data facility, is used to busy out a customer's facilities and is used in conjunction with and must be related to a circuit with the Make Busy Arrangement described in 6.3.1.Z., following. The Make Busy arrangement requires a two-wire analog DNAL between the customer's CSL or FGA dial tone office and the customer's premises with a DNAL termination described in C., following. The Low Speed Data facility is capable of providing a two point circuit for control of a transfer arrangement, control of a relay or a similar contact closure function at data speeds no greater than 30 baud. The facility will be furnished on metallic or equivalent facilities at the Company's option. (T)

6. SWITCHED ACCESS SERVICE

6.2 PROVISION AND DESCRIPTION OF SWITCHED ACCESS SERVICE
6.2.10 DEDICATED NETWORK ACCESS LINK (DNAL)

B. Transport Facility (Cont'd)

2. DNAL Requirements for Customer Identification - BULK (BCLID), Message Delivery Service (MDS) or Message Delivery Service - Interoffice (MDSI)

The DNAL provided for BCLID, MDS or MDSI is used for the transmission of call-related information to the customer. The DNAL is used in conjunction with a Call Data input/output Central Office Facility for BCLID, MDS, or MDSI as described in 6.3.1., following. The DNAL is required between the customer's CSL or FGA dial tone office and the customer's premises. A modem is provided in the central office and a compatible modem is required at the customer's premises.

This service is available only in Company-designated offices and requires a 1200 bps or 9600 bps DNAL Transport Termination, described in C., following, and a (T)
four-wire DNAL Transport Facility in every office a customer wants to access. The four-wire DNAL is a Voice Grade facility which provides voice frequency transmission capability in the nominal frequency range of 300 to 3000 Hz. When a DNAL is ordered to be terminated at a customer's designated Interexchange Carrier's digital POP which requires a minimum digital interface level of 1.544 Mbps, the Company will provide the required interface and assess the customer a DNAL Transport Termination charge.

Mileage measurement for the DNAL shall be in accordance with the regulations set forth in 6.7.11., following. (T)

C. DNAL Transport Termination

1. A 0-30 bps analog DNAL Transport Termination provides an interface for the (T)
connection of an analog Low Speed Data Service facility for the Make Busy Arrangement.

2. A 1200 bps DNAL Transport Termination provides an interface for the capability (T)
to transmit data at a 1200 bps rate using a Voice Grade facility and requires a (T)
compatible modem at the customer designated premises for BCLID and MDS.

3. A 9600 bps DNAL Transport Termination provides an interface for the capability (T)
to transmit data at a 9600 bps rate using a Voice Grade facility and requires a (T)
CCITT V.29 four-wire compatible modem at the customer-designated premises
for MDS and MDSI. (C)

D. Rates and charges for DNALs are described in 6.7.1.M., following.

6. SWITCHED ACCESS SERVICE

6.2 PROVISION AND DESCRIPTION OF SWITCHED ACCESS SERVICE (Cont'd)

6.2.11 SWITCHED DATA SERVICE (SDS)

Switched Data Service (SDS) is a two way service utilizing trunkside Switched Access Service. SDS provides a digital connection between a customer's premises and a suitably equipped circuit switched data end user's premises. Access is made via the standard dialing pattern for CST3 or Feature Group D Switched Access Service.

SDS is available on dedicated trunk groups capable of transmitting digital transmission speeds up to 56 kbps using Interface Group 6 or 9 equipped with individual transmission bit-stream supervisory signaling. SDS is not available with SS7 out of band signaling.

SDS is provided in suitably equipped equal access end offices[1] and is provisioned as CST3 or Feature Group D. SDS traffic may not be combined on the same trunk group with traffic which is not circuit switched data.

Measurement of Switched Data Service usage shall be in accordance with the regulations set forth in 6.7.7, following, for CST3 and Feature Group D. Rates and charges for SDS are described in 6.7.1., following. (T)

[1] SDS is not provided via a DTT facility equipped with Tandem Signaling Information.

6. SWITCHED ACCESS SERVICE

6.2 PROVISION AND DESCRIPTION OF SWITCHED ACCESS SERVICE

6.2.12 500 ACCESS SERVICE (N)

500 Access Service is an originating service utilizing Trunkside Switched Access Service which provides for the forwarding of an end user dialed 0+ and 1+500+NXX-XXXX call to the customer, based on the NXX dialed. This six-digit routing function is performed at the required point of six-digit translation as determined by the Company.

500 Access Service is available only as a LATA-wide service and must be ordered to all end offices in a LATA and must be provisioned, at a minimum, to all access tandems in a LATA. The manner in which 500 Access Service is provisioned is dependent on the status of the end office which serves the end user customer who places a 500 call (i.e., equipped or not equipped with equal access capability) and/or the status of the customer (i.e., MTS/WATS provider or MTS/WATS-type provider). When 500 Access Service is provided from an end office equipped with equal access capability, all such service is provisioned as CST3 or Feature Group D. The customer may order 500 Access Service directly to an end office via CST3 or Feature Group D to only those offices designated by the Company. When 500 Access Service is provided from an end office not equipped with equal access capability, such service is provisioned from an access tandem as CST1, CST2, Feature Group B or Feature Group C utilizing traditional signaling and answer supervision. For 500 Access Service provisioned with traditional signaling and answer supervision, network limitations require routing of 500 traffic from an access tandem via a dedicated trunk group. However, this dedicated trunk group may have a combination of 500 traffic and 900 traffic when both Access Services (i.e., 500 and 900) are provisioned with traditional signaling and answer supervision from an access tandem.

500 traffic may be combined in the same trunk group arrangement with non-500 traffic or provisioned on a separate trunk group, unless prohibited by technical limitations. (N)

6. SWITCHED ACCESS SERVICE

6.2 PROVISION AND DESCRIPTION OF SWITCHED ACCESS SERVICE
6.2.12 500 ACCESS SERVICE (Cont'd)

Calls originating in a LATA in which the customer has not ordered 500 Access Service are blocked. In addition, 0+ and 1+500+NXX-XXX calls originating in a LATA for which 500 Access Service has been established are blocked from 1+ sent-paid pay telephones (except customer owned coin operated telephones), 101XXXX, Inmate Service, toll restricted lines and multiparty service. (S-y)

Measurement of 500 Access Service usage shall be in accordance with the regulations set forth in 6.7.7, following, for CST1, CST2, CST3, Feature Group B, Feature Group C and Feature Group D.

The rates and charges for 500 Access Service are described in 6.7.1., following. (T)

(y) Reissued matter filed under Transmittal No. 925 to become effective July 1, 1998.

6. SWITCHED ACCESS SERVICE

6.3 COMMON SWITCHING, TRANSPORT TERMINATION AND LINE TERMINATION OPTIONAL FEATURES AND BSEs

Following are descriptions of the various optional features and BSEs that are available in lieu of, or in addition to, the standard features provided with the Switched Access Services. They are provided as either Common Switching, Transport Termination or Line Termination options. The following matrix specifies optional features and BSEs available by BSA and FG.

FEATURE GROUP
OPTIONAL FEATURES AND BSEs

COMMON SWITCHING OPTIONAL FEATURES AND BSEs	FGA	FGB	FGC	FGD	BUNDLED *DID*
• Call Denial	X				
• Service Code Denial	X				
• Hunt Group Arrangement	X				
• Uniform Call Distribution Arrangement (UCD)	X				
• Nonhunting Number for Use With Hunt Group Arrangement or UCD	X				
• Automatic Number Identification		X	X	X	
- Flexible ANI (BSE)				X	

6. SWITCHED ACCESS SERVICE

6.3 COMMON SWITCHING, TRANSPORT TERMINATION AND LINE TERMINATION OPTIONAL FEATURES AND BSEs (Cont'd)

FEATURE GROUP
OPTIONAL FEATURES AND BSEs

COMMON SWITCHING OPTIONAL FEATURES AND BSEs	FGA	FGB	FGC	FGD	BUNDLED *DID*
• Up to 7 Digit Outpulsing to Customer					
- Access Digits		X			
- Called Party Telephone Number					X
• Cut-Through				X	
• Delay Dial Start-Pulsing Signaling			X		
• Immediate Dial Pulse Address Signaling			X		
• Dial Pulse Address Signaling			X		X
• Service Class Routing			X	X	
• Alternate Traffic Routing		X	X	X	
• Trunk Access Limitation			X	X	

6. SWITCHED ACCESS SERVICE

6.3 COMMON SWITCHING, TRANSPORT TERMINATION AND LINE TERMINATION OPTIONAL FEATURES AND BSEs (Cont'd)

FEATURE GROUP
OPTIONAL FEATURES AND BSEs

COMMON SWITCHING OPTIONAL FEATURES AND BSEs	FGA	FGB	FGC	FGD	BUNDLED *DID*	
• International Carrier Option				X		
• SWITCHNET 56				X		
• WATS Access Service	X	X	X	X		
• InterLATA Toll Denial	X					
• 950 on FGD				X		
• Call Transfer (BSE)	X					
• Three-Way Calling (BSE)	X					
• Caller Identification - Number (BSE)	X					(T)
• Caller Identification - BULK (BSE)	X					(T)
• Message Delivery Service (BSE)	X					(T)
• Message Delivery Service - Interoffice (BSE)	X					(N) (N)
• DID Trunk Queuing (BSE)					X	

6. SWITCHED ACCESS SERVICE

6.3 COMMON SWITCHING, TRANSPORT TERMINATION AND LINE TERMINATION OPTIONAL FEATURES AND BSEs (Cont'd)

FEATURE GROUP
OPTIONAL FEATURES AND BSEs

COMMON SWITCHING OPTIONAL FEATURES AND BSEs	**FGA**	**FGB**	**FGC**	**FGD**	**BUNDLED *DID***
• Make Busy (BSE)	X				
• Call Forwarding Variable (BSE)	X				
• Queuing for Use With UCD (BSE)	X				
• SS7 Out of Band Signaling				X	
• Clear Channel Capability (BSE)				X	
TRANSPORT TERMINATION OPTIONAL FEATURES AND BSEs					
• Operator Trunk-Coin, Non-Coin, or Combined Coin and Non-Coin			X	X	
• Operator Trunk-Full Feature				X	

6. SWITCHED ACCESS SERVICE

6.3 COMMON SWITCHING, TRANSPORT TERMINATION AND LINE TERMINATION OPTIONAL FEATURES AND BSEs (Cont'd)

FEATURE GROUP
OPTIONAL FEATURES AND BSEs

LINE TERMINATION OPTIONAL FEATURES AND BSEs	FGA	FGB	FGC	FGD	BUNDLED *DID*
• Answer Supervision for Use With WATS Access Service		X	X	X	
• Answer Supervision - Lineside (BSE)	X				
Optional Features Available Under Access and/or Local Exchange Tariff					
• Custom Calling Features[1]	X				
• MARKET EXPANSION LINE	X				
• Bill Number Screening	X	X			
• IntraLATA Extensions	X				
• Open Switching Interval Protection (OSIP)	X				
• Billed Number Screening					X
• Blocks of Telephone Numbers					X
• Message Waiting Indication-Audible	X				

[1] Excludes Call Transfer, Three-Way Calling, Caller Identification - Number and Call Forwarding Variable.

6. SWITCHED ACCESS SERVICE

6.3 COMMON SWITCHING, TRANSPORT TERMINATION AND LINE TERMINATION OPTIONAL FEATURES AND BSEs (Cont'd)

CSL AND CST
OPTIONAL FEATURES AND BSEs

COMMON SWITCHING OPTIONAL FEATURES AND BSEs	CSL	CST1	CST2	CST3	UNBUNDLED *DID*
• Call Denial	X				
• Service Code Denial	X				
• Hunt Group Arrangement (BSE)	X				
• Uniform Call Distribution (BSE)	X				
• Nonhunting Number for Use With Hunt Group Arrangement or UCD	X				
• Automatic Number Identification (BSE)		X	X	X	
- Flexible ANI (BSE)				X	
• Up to 7 Digit Outpulsing to Customer					
- Access Digits		X			
- Called Directory Number Delivery (BSE)					X

6. SWITCHED ACCESS SERVICE

6.3 COMMON SWITCHING, TRANSPORT TERMINATION AND LINE TERMINATION OPTIONAL FEATURES AND BSEs (Cont'd)

CSL AND CST
OPTIONAL FEATURES AND BSEs

COMMON SWITCHING OPTIONAL FEATURES AND BSEs	CSL	CST1	CST2	CST3	UNBUNDLED *DID*
• Cut-Through				X	
• Delay Dial Start-Pulsing Signaling			X		
• Immediate Dial-Pulse Address Signaling			X		
• Dial-Pulse Address Signaling			X		X
• Service Class Routing			X	X	
• Alternate Traffic Routing (BSE)		X	X	X	
• Trunk Access Limitation			X	X	
• International Carrier Option				X	
• SWITCHNET 56				X	
• WATS Access Service	X	X	X	X	

6. SWITCHED ACCESS SERVICE

6.3 COMMON SWITCHING, TRANSPORT TERMINATION AND LINE TERMINATION OPTIONAL FEATURES AND BSEs (Cont'd)

CSL AND CST
OPTIONAL FEATURES AND BSEs

COMMON SWITCHING OPTIONAL FEATURES AND BSEs	CSL	CST1	CST2	CST3	UNBUNDLED *DID*	
• InterLATA Toll Denial	X					
• 950 on CST3				X		
• Call Transfer (BSE)	X					
• Three-Way Calling (BSE)	X					
• Caller Identification - Number (BSE)	X					(T)
• Caller Identification - BULK (BSE)	X					(T)
• Message Delivery Service (BSE)	X					(T)
• Message Delivery Service - Interoffice (BSE)	X					(N) (N)
• DID Trunk Queuing (BSE)					X	
• Make Busy (BSE)	X					
• Call Forwarding Variable (BSE)	X					(T)
• Queuing for Use With UCD (BSE)	X					(T)
• SS7 Out of Band Signaling				X		
• Clear Channel Capability (BSE)				X		(T)

6. SWITCHED ACCESS SERVICE

6.3 COMMON SWITCHING, TRANSPORT TERMINATION AND LINE TERMINATION OPTIONAL FEATURES AND BSEs (Cont'd)

CSL AND CST
OPTIONAL FEATURES AND BSEs

TRANSPORT TERMINATION OPTIONAL FEATURES AND BSEs	CSL	CST1	CST2	CST3	UNBUNDLED *DID*
• Operator Trunk - Coin, Non-Coin, or Combined Coin and Non-Coin			X	X	
• Operator Trunk - Full Feature				X	
LINE TERMINATION OPTIONAL FEATURES AND BSEs					
• Answer Supervision for Use With WATS Access Service		X	X	X	
• Answer Supervision - Lineside (BSE)	X				

6. SWITCHED ACCESS SERVICE

6.3 COMMON SWITCHING, TRANSPORT TERMINATION AND LINE TERMINATION OPTIONAL FEATURES AND BSEs (Cont'd)

CSL AND CST
OPTIONAL FEATURES AND BSEs

OPTIONAL FEATURES AVAILABLE UNDER STATE ACCESS AND/OR LOCAL EXCHANGE TARIFF	CSL	CST1	CST2	CST3	UNBUNDLED *DID*
• Customer Calling Features[1]	X				
• MARKET EXPANSION LINE	X				
• Bill Number Screening	X	X			
• IntraLATA Extensions	X				
• Open Switching Interval Protection (OSIP)	X				
• Billed Number Screening					X
• Blocks of Telephone Numbers					X
• Message Waiting Indication-Audible	X				

(T)

[1] Excludes Call Transfer, Three-Way Calling, Caller Identification-Number and Call Forwarding Variable.

6. SWITCHED ACCESS SERVICE

6.3 COMMON SWITCHING, TRANSPORT TERMINATION AND LINE TERMINATION OPTIONAL FEATURES AND BSEs (Cont'd)

6.3.1 COMMON SWITCHING OPTIONAL FEATURES AND BSEs

A. Call Denial on Line or Hunt Group

This option allows the screening of terminating calls within the LATA, and the completion only of calls to 411, 611, 911, 8XX, 555-1212 and a Company specified set of NXXs within the Company local exchange calling area of the dial tone office in which the arrangement is provided. All other "toll" calls are routed to a reorder tone or recorded announcement. This feature is provided in all Company electronic end offices and, where available, in electromechanical end offices. It is available with CSL and Feature Group A. (C)

B. Service Code Denial on Line or Hunt Group

This option allows the screening of terminating calls within the LATA, and for disallowing completion of calls to 0-, 555 and N11 (i.e., 411, 611 and 911). This feature is provided where available in all Company electronic end offices and electromechanical end offices. It is available with CSL and FGA.

C. Hunt Group Arrangement

Hunt Group Arrangement (BSE)

This option provides the ability to access sequentially one of two or more line side connections in the originating direction, when the access code of the line group is dialed. This feature is provided in all Company end offices. It is available with CSL and FGA. Resold and non-resold Lineside Access cannot be mixed in the same hunt group arrangement.

(D)

6. SWITCHED ACCESS SERVICE

6.3 COMMON SWITCHING, TRANSPORT TERMINATION AND LINE TERMINATION OPTIONAL FEATURES AND BSEs

6.3.1 COMMON SWITCHING OPTIONAL FEATURES AND BSEs

C. Hunt Group Arrangement (Cont'd)

Hunting sequence arrangements are offered under two primary configurations:

1. Series Completion Hunting

This type of hunting can be accomplished in two ways:

- Sequential Number Hunting

  The hunt starts with the called telephone number and ends with the last telephone number in the prearranged hunt group. The call is completed to the first idle telephone number encountered. Unless the first telephone number in the hunting group is called, only a portion of the hunting group will be tested starting at the point of entry into the group and continuing until the end of the group. The pre-arranged sequence can be consecutive (telephone numbers are in ascending numerical order) or non consecutive (any telephone number may hunt to any telephone number in the same central office switch).

- Circular Hunting

  The hunt sequence starts with the called telephone number and proceeds in a pre-arranged order to test all numbers in the group. The call will be completed to the first idle line. Circular hunting allows the call to hunt through the entire group once, no matter where the call enters the hunt group (unlike Sequential Number Hunting, which only routes to the end of the hunt group). This arrangement is accomplished by routing the last number in the hunt group back to the first number of the hunt group.

6. SWITCHED ACCESS SERVICE

6.3 COMMON SWITCHING, TRANSPORT TERMINATION AND LINE TERMINATION OPTIONAL FEATURES AND BSEs

6.3.1 COMMON SWITCHING OPTIONAL FEATURES AND BSEs

C. Hunt Group Arrangement (Cont'd)

2. Multiline Hunting

This type of hunting permits calls to a busy telephone number (the address of a line) to be routed to other specified lines. These lines do not require a telephone number (address) be assigned by the Telephone Company. Only those lines that require direct access by calling parties require the association/assignment of a telephone number.

Multiline Hunting is done sequentially by line within the hunt group as previously defined in Sequential Number Hunting. One telephone number (the begin-hunt number) must be assigned to the designated first line within the group of sequentially ordered lines that form the multiline hunt group. As previously stated, telephone numbers may be assigned to other lines within the multiline hunt group for direct access or to from subgroups of lines to be hunted.

D. Uniform Call Distribution Arrangement

Uniform Call Distribution Arrangement (BSE)

This option provides a type of multiline hunting arrangement which provides an equitable distribution of calls among the available lines in a hunt group. Where available, this feature is provided in Telephone Company electronic end offices only. It is available with CSL and FGA.

E. Nonhunting Number for Use with Hunt Group Arrangement or Uniform Call Distribution Arrangement

This option provides an arrangement for an individual line within a multiline hunt or uniform call distribution group that provides access to that line within the hunt or uniform call distribution group when it is idle or provides busy tone when it is busy, when the nonhunting number is dialed. Where available, this feature is provided in Telephone Company electronic end offices only. It is available with CSL and FGA.

6. SWITCHED ACCESS SERVICE

6.3 COMMON SWITCHING, TRANSPORT TERMINATION AND LINE TERMINATION OPTIONAL FEATURES AND BSEs

6.3.1 COMMON SWITCHING OPTIONAL FEATURES AND BSEs (Cont'd)

F. Automatic Number Identification (ANI)

Automatic Number Identification (BSE)

This option provides the automatic transmission of a three-, seven- or ten-digit number and Information Digits to the customer's premises for calls originating in the LATA, to identify the calling station. The three-, seven- or ten-digit numbers will contain the following information: three-digit, NPA only; seven-digit, NXX-XXXX; ten-digit, NPA-NXX-XXXX. The ANI feature is an end office software function which is associated on a call-by-call basis with (a.) trunk groups routed directly between an end office and a customer's premises or, where technically feasible, with (b.) trunk groups between an end office and a customer's premises routed through an access tandem. (T) | (T)

The seven-digit ANI telephone number is available (excluding 500 Access Service) with CST1 and Feature Group B, where provided, and CST2 and Feature Group C. The seven-digit ANI telephone number is available with 900 Access Service. With these Feature Groups and 900 Access Service, ANI will be provided only with DTT. ANI will be transmitted on all calls except those originating from four- or eight-party lines, pay telephones using CST1 or Feature Group B, when the end user has dialed 0- for operator assistance or when an ANI failure has occurred.

The ten-digit ANI telephone number is only available with CST3 and Feature Group D, including 500 Access Service, 800 DB Access Service and 900 Access Service provisioned as CST3 or Feature Group D. The ten-digit ANI telephone number consists of the Numbering Plan Area (NPA) plus the seven-digit ANI telephone number. The ten-digit ANI telephone number will be transmitted on all calls except those identified as four- or eight-party lines or when the end user has dialed 0- for operator assistance, in which case only the NPA will be transmitted (in addition to the information digit).

6. SWITCHED ACCESS SERVICE

6.3 COMMON SWITCHING, TRANSPORT TERMINATION AND LINE TERMINATION OPTIONAL FEATURES AND BSEs

6.3.1 COMMON SWITCHING OPTIONAL FEATURES AND BSEs

F. Automatic Number Identification (ANI) (Cont'd)

When 800 DB Access Service is ordered, the ten-digit ANI telephone number will be transmitted on all calls except those where ANI cannot be provided as stated above or from end offices not equipped to provide ANI. In these instances, only the three-digit NPA and the information digits described in the LATA Switching Systems Generic Requirements (LSSGR), Technical Reference FR-64, if applicable, will be transmitted. (S-y) (T) (T)

With CST2 and Feature Group C, ANI is provided from end offices at which Company recording for end user billing is not provided, or where it is not required. It is not provided from end offices for which the Company needs to forward ANI to its recording equipment.

Technical specifications are delineated in Technical References TR-NPL-000175 and TR-NPL-000258.

Where ANI cannot be provided, (e.g., on calls from four- and eight-party services,) information digits will be provided to the customer.

Charge Number is the SS7 out of band signaling equivalent of the 10-digit ANI telephone number. Charge Number is the automatic transmission of the ten-digit billing number of the calling station and the originating line information when a CST3 or FGD trunk group is provisioned with SS7 out of band signaling. Charge Number is provided when the customer requests the ANI optional feature or ANI (BSE) on FGD or CST3 trunk groups provisioned with SS7 out of band signaling.

(y) Reissued matter filed under Transmittal No. 702 to become effective on March 1, 1996.

6. SWITCHED ACCESS SERVICE

6.3 COMMON SWITCHING, TRANSPORT TERMINATION AND LINE TERMINATION OPTIONAL FEATURES AND BSEs

6.3.1 COMMON SWITCHING OPTIONAL FEATURES AND BSEs

F. Automatic Number Identification (ANI) (Cont'd)

ANI information and Charge Number information are provided based on the following requirements:

1. The telephone number and billing information may be used for billing and collection, routing, screening, and completion of the originating subscriber's call or transaction, or for services directly related to the originating subscriber's call or transaction;

2. The ANI information shall not be reused or resold without first (A) notifying the originating subscriber and (B) obtaining the affirmative consent of such subscriber for such reuse or resale; and

3. ANI information shall not be disclosed, except as permitted by (1) and (2), above, for any purpose other than performing the services or transactions that are the subject of the originating subscriber's call, (ii) ensuring network performance security, and the effectiveness of call delivery, (iii) compiling, using and disclosing aggregate information, and (iv) complying with applicable law or legal process.

ANI information digits (ANIii) are the two digits that precede the seven- or ten-digit telephone number on the ANI record. ANI information digits inform the customer of the calling party's class of service for billing, routing and special handling purposes. Flexible ANI is a network enhancement that allows the Company to install new ANI information digits with a software update. The two digit ANIii pair assignments are made by the North American Numbering Plan Administrator at Telcordia and are delineated in Technical Reference TR-NPL-000258. (T)

6. SWITCHED ACCESS SERVICE

6.3 COMMON SWITCHING, TRANSPORT TERMINATION AND LINE TERMINATION OPTIONAL FEATURES AND BSEs

6.3.1 COMMON SWITCHING OPTIONAL FEATURES AND BSEs

F. Automatic Number Identification (ANI) (Cont'd)

Flexible ANI (BSE) is available with ANI Optional Feature on FGD or ANI (BSE) on CST3 Service when the customer has new or existing CST3 or FGD ANI trunk groups in suitably equipped Company end offices. Flexible ANI is not available with FGB, FGC, or CST1 or CST2 Services. (M)

Flexible ANI may be ordered coincident with the installation of associated trunk activity or subsequent (e.g., without) associated trunk activity. This option is provided on a Carrier Identification Code (CIC) basis per end office. Once the Flexible ANI option is activated per CIC code in an end office, all new or existing FGD or CST3 trunk groups equipped with ANI will be capable of handling the new ANIii pairs installed via the Flexible ANI software. (M) (T)

Nonrecurring charges, as set forth in 6.8.2, following, are not applicable when the customer orders Flexible ANI for the sole purpose of determining payphone compensation to Payphone Service Providers. Nonrecurring charges, as set forth in 6.8.2, following, are applicable when the customer orders Flexible ANI for purposes other than the determination of payphone compensation. (C) (C)

Certain material found on this page formerly found on Page 6-118.

6. SWITCHED ACCESS SERVICE

6.3 COMMON SWITCHING, TRANSPORT TERMINATION AND LINE TERMINATION OPTIONAL FEATURES AND BSEs

6.3.1 COMMON SWITCHING OPTIONAL FEATURES AND BSEs (Cont'd)

G. Up to 7 Digit Outpulsing to Customer

1. Access Digits

   This option provides for the end office capability of providing up to 7 digits of the uniform access code 950-XXXX or 1 + 950-XXXX to the customer's premises. The customer can request that only some of the digits in the access code be forwarded. The access code digits would be provided to the customer's premises using multifrequency signaling, and transmission of the digits would precede the forwarding of ANI if that feature were provided. It is available with CST1 and Feature Group B.

2. Called Party Telephone Number

   AVAILABLE IN ID (SPOKANE LATA), OR, WA ONLY

   This option provides the end office capability of providing up to seven digits of the called party telephone number to the customer's premises. The customer may request that only some of the digits in the telephone number be forwarded. The telephone number digits will be forwarded using multifrequency (MF), DTMF or dial-pulse address signaling. This option is available with bundled *DID* Switched Access Service.

3. Called Directory Number Delivery (BSE)

   AVAILABLE IN ID (SPOKANE LATA), OR, WA ONLY

   Called Directory Number Delivery (CDND) provides the end office capability of routing up to seven digits of the Called Party Telephone number to the customer's premises. The customer may request that only some of the digits in the telephone number be forwarded. The telephone number digits will be forwarded using Multifrequency (MF) Dual-Tone Multifrequency (DTMF) or Dial-Pulse (DP) address signaling. This option is available only with unbundled *DID* Switched Access Service.

6. SWITCHED ACCESS SERVICE

6.3 COMMON SWITCHING, TRANSPORT TERMINATION AND LINE TERMINATION OPTIONAL FEATURES AND BSEs

6.3.1 COMMON SWITCHING OPTIONAL FEATURES AND BSEs (Cont'd)

H. Cut-Through

This option allows end users of the customer to reach the customer's premises by using the end-of-dialing digit (#). This option provides for connection of the call to the premises of the customer indicated by the 101XXXX uniform access code upon receipt of the end-of-dialing digit (#). The Company will not record any other dialed digits for these calls. This option is available with CST3 and Feature Group D. (C)

I. Delay Dial-Start-Pulsing Signaling

This option provides a method of indicating to the near-end trunk circuit readiness to accept address signaling information by the far-end trunk circuit. Delay dial is often referred to as an off-hook, on-hook signaling sequence. The delay dial signal is the off-hook interval and the start-pulsing signal is the on-hook interval. With integrity check, the calling office will not outpulse until a delay dial (off-hook) signal followed by a start-pulsing (on-hook) signal has been identified at the calling office. This option is available with CST2 and Feature Group C.

J. Immediate Dial-Pulse Address Signaling

This option provides for the forwarding of dial pulses from the Company end office to the customer without the need of a start-pulsing signal from the terminating office. It is available with CST2 and Feature Group C.

K. Dial Pulse Address Signaling

This trunkside option provides for the transmission of number information, e.g., called number, between the end office switching system and the customer's POT in either direction by means of direct current pulses. It is available with CST2, Feature Group C and *DID* Switched Access Service.

6. SWITCHED ACCESS SERVICE

6.3 COMMON SWITCHING, TRANSPORT TERMINATION AND LINE TERMINATION OPTIONAL FEATURES AND BSEs

6.3.1 COMMON SWITCHING OPTIONAL FEATURES AND BSEs (Cont'd)

L. Service Class Routing

This option provides the capability of directing originating traffic from an end office to a trunk group to a customer designated premises, based on the line class of service (e.g., coin, multiparty or hotel/motel), service prefix indicator (e.g., 00+, 00-, 0+, 0-, 1+, 01+ or 011+) or service access code (e.g., 500, 8XX or 900). A customer may direct all originating calls from an end office to a tandem trunk group to a single customer point of termination (POT) or multiple points of termination (POTs) when ordered with MPTS as referred to in 6.1.2.A.4., preceding, based on the line class of service, service prefix indicator or service access code. It is provided in suitably equipped end office or access tandem switches and is available with CST2, CST3, Feature Groups C and D based on technical limitations.

M. Alternate Traffic Routing

Alternate Traffic Routing (BSE)

The types of Alternate Traffic Routing available are described in 1. through 3., following. When Alternate Traffic Routing is added subsequent to initial service installation, service rearrangement charges are determined as set forth in 6.7.1, following. (N)

1. Multiple Customer Premises Alternate Routing

a. This option provides the capability of directing originating traffic from an end office (or appropriately equipped access tandem) via a trunk group (the "high usage" group) to a customer designated premises until that group is fully loaded, and then delivering additional originating traffic (the "overflowing" traffic) from the same end office or access tandem to a different trunk group (via one or more intermediate high usage groups) to different customer designated premises until the originating traffic is directed to a final trunk group. The customer shall specify the last trunk CCS desired for the high usage group and each intermediate group(s). It is provided in suitably equipped end office or access tandem switches and is available with CST1, CST2, CST3, Feature Groups B, C and D.

6. SWITCHED ACCESS SERVICE

6.3 COMMON SWITCHING, TRANSPORT TERMINATION AND LINE TERMINATION OPTIONAL FEATURES AND BSEs

6.3.1 COMMON SWITCHING OPTIONAL FEATURES AND BSEs

M.1. (Cont'd)

b. Multiple Customer Premises Alternate Routing with MPTS [1] (C)

This option provides the capability of directing originating traffic from an end office via a direct trunk group (the high usage group) and deliver originating traffic (the overflowing traffic) from the same end office through the tandem to a tandem routed trunk group (the "final" group) to a customer designated point of termination (POT). The tandem trunk group must be routed to the customer designated point of termination (POT) that is specified for the Tandem Sector of the originating end office. It is provided in suitably equipped end office or access tandem switches and is available with CST2, CST3, Feature Groups C and D. MPTS Alternate Routing is not available on CST3 or FGD Service provisioned on a DTT facility equipped with Tandem Signaling Information.

Alternate traffic routing through the tandem to a multiple customer point of termination (POT) is not an option with MPTS. A customer may not overflow tandem traffic from one customer designated point of termination (POT) to a second customer designated point of termination (POT).

[1] Effective February 20, 1999, MPTS is limited to existing customers on existing MPTS trunk groups only. Customers with MPTS in service may augment existing MPTS trunk groups until the service is moved or disconnected. If the service is moved or disconnected, MPTS may not be reestablished. (C)

Certain material previously found on this page can now be found on Page 6-122.1.

6. SWITCHED ACCESS SERVICE

6.3 COMMON SWITCHING, TRANSPORT TERMINATION AND LINE TERMINATION OPTIONAL FEATURES AND BSEs

6.3.1 COMMON SWITCHING OPTIONAL FEATURES AND BSEs

M.1. (Cont'd)

2. End Office Alternate Routing When Ordered in Trunks (M)

   This option provides an alternate routing arrangement for customers who order in trunks and have access for a particular serving arrangement to an end office via two routes: one route via an access tandem and one direct route. The feature allows the customer's originating traffic from the end office to be offered first to the direct trunk group and then overflow to the access tandem group. It is provided in suitably equipped end offices and is available with CST1, CST2, CST3, Feature Groups B, C and D.

3. End Office Alternate Routing to a Customer-Provided Tandem Premises

   This option provides an alternate routing arrangement for customers who order in trunks and have access to an end office via two routes: one route equipped with Tandem Signaling Information (TSI) via a customer-provided tandem premises and one direct route without TSI. The option allows FGD or CST3 originating traffic from an end office to be offered first to the direct trunk group and then overflow to the customer-provided tandem group. When the customer selects this option, the customer may not have for the same end office an alternate route to a Company access tandem. This option is provided in suitably equipped end offices and is available with FGD or CST3 Service only. (M)

Certain material on this page formerly appeared on Page 6-122.

6. SWITCHED ACCESS SERVICE

6.3 COMMON SWITCHING, TRANSPORT TERMINATION AND LINE TERMINATION OPTIONAL FEATURES AND BSEs

6.3.1 COMMON SWITCHING OPTIONAL FEATURES AND BSEs (Cont'd)

N. Trunk Access Limitation

This option provides for the routing of originating 900 service calls to a specified number of transmission paths in a trunk group, in order to limit (choke) the completion of such traffic to the customer. Calls to the designated service which could not be completed over the subset of transmission paths in the trunk group, i.e., the choked calls, would be routed to reorder tone. It is provided in all Company electronic end offices and where available in electromechanical end offices. It is available with CST2, CST3, Feature Groups C and D.

O. International Carrier Option

This option allows for CST3 and Feature Group D end offices or access tandem switches equipped for International Direct Distance Dialing to be arranged to forward international calls to a carrier other than the one designated by the end user through presubscription or 101XXXX dialing. There are two additional features provided with this option as described following. (C)

1. International Carriers International Feature

This feature allows an international carrier without a presence in the LATA to authorize the Company to forward its end users' international calls to a domestic carrier for transport to the international carrier.

2. Domestic Carriers International Feature

This feature allows a domestic carrier to authorize the Company to forward its end users' international calls to an international carrier with a presence in the LATA

In either case, this arrangement requires provision of written verification to the Company that the customer is allowed to forward such calls. The written verification must be in the form of a letter of agency authorizing the customer to order the option on behalf of another carrier.

6. SWITCHED ACCESS SERVICE

6.3 COMMON SWITCHING, TRANSPORT TERMINATION AND LINE TERMINATION OPTIONAL FEATURES AND BSEs

6.3.1 COMMON SWITCHING OPTIONAL FEATURES AND BSEs (Cont'd)

P. *SWITCHNET 56* Service Switching Capability

This option allows for a connection between the customer's premises and a suitably equipped end users premises utilizing end office and/or access tandem switching capable of transmitting 56 kbps digital data. *SWITCHNET 56* Service is available in conjunction with CST3 or Feature Group D from suitably equipped electronic end offices and/or access tandems. When *SWITCHNET 56* Service is ordered in conjunction with CST3 or FGD, it requires the use of a separate trunk group equipped with Interface Group 6. When *SWITCHNET 56* is used with CST3 or FGD, the standard CST3 or FGD dialing pattern is used. This dialing pattern may vary according to the technology implemented in each specific U S WEST Communications end office and/or access tandem (i.e., dialing #56 may be required dependent upon the switching technology).

Q. WATS Access Service (WATS)

1. Description

At the option of the customer, WATS Access Service as specified following may be provided at Company designated end office switches, referred to as WATS Serving Office(s) (WSO). WATS Serving Offices are identified in National Exchange Carrier Association, Inc. Tariff F.C.C. No. 4. WATS Access Service is provided in conjunction with Lineside and Trunkside Switched Access Service and any compatible Private Line Transport Service, referred to as WATS Access Line(s). The WATS Access Line as described in 5.2, preceding, is required to connect the WSO to the end user's premises.

6. SWITCHED ACCESS SERVICE

6.3 COMMON SWITCHING, TRANSPORT TERMINATION AND LINE TERMINATION OPTIONAL FEATURES AND BSEs

6.3.1 COMMON SWITCHING OPTIONAL FEATURES AND BSEs

Q.1. (Cont'd)

The WSO is capable of performing the necessary routing, screening and recording functions for 800/800-type Service, WATS and similar services and is provided only for use at the closed end of such services. The WSO may be capable of performing some or all of the WATS Access Service Arrangements and WATS Access Service Options as described in 2. and 3., following. Technical limitations resident in certain end office switches that are designated as a WSO, may preclude the availability of certain WATS Access Service Arrangements and WATS Access Service Options. In addition, Answer Supervision for Use with WATS Access Service, as described in 6.3.3.A., following, is available only in suitably equipped WATS Serving Offices. (C)

WATS Access Service can be arranged for originating-only, terminating-only or two-way calling, depending on the specific arrangement employed. Dial-pulse or dual-tone multifrequency address signaling and either loop start or ground start supervisory signaling is used to work with any compatible Private Line Transport Service, such as Analog Private Line - Voice Grade or PLTS DS1 Services. Unless otherwise described herein, all options and optional features that are available with Lineside or Trunkside access are available in conjunction with WATS Access Service. Options and optional features that are available with Private Line Transport Services used as WATS Access Lines are provided as set forth in Section 7, following.

6. SWITCHED ACCESS SERVICE

6.3 COMMON SWITCHING, TRANSPORT TERMINATION AND LINE TERMINATION OPTIONAL FEATURES AND BSEs

6.3.1 COMMON SWITCHING OPTIONAL FEATURES AND BSEs

Q.1. (Cont'd)

WATS Access Lines are subject to all applicable Private Line Transport Service Channel Termination rates as specified in Section 7, following, for connections between the end user's premises and the WSO wire center. In cases where WATS Access Service is requested from a wire center that is not a WSO, Channel Mileage, as specified in Section 7, following, will apply to the connecting facility provided between the end user's serving wire center and the WSO wire center where the WATS Access Service is provided. Channel Mileage will be calculated on the airline distance between the end user's serving wire center and the WSO wire center. (T) (T)

In cases where WATS Access Service is provided from a wire center that is a WSO but lacks the capability for the requested WATS Access Service arrangement, no Channel Mileage charges will apply.

2. WATS Access Service Arrangements

WATS Access Service is available as provided in five unique arrangements (i.e., Packages) which are differentiated by service type (e.g., WATS and 800/800-type Service), directionality, call type, service prefix and traffic type. WATS Access Service Arrangements are available in conjunction with Lineside and Trunkside Access as specified herein. A brief description of each WATS Access Service Arrangement is following.

6. SWITCHED ACCESS SERVICE

6.3 COMMON SWITCHING, TRANSPORT TERMINATION AND LINE TERMINATION OPTIONAL FEATURES AND BSEs

6.3.1 COMMON SWITCHING OPTIONAL FEATURES AND BSEs

Q.2. (Cont'd)

a. Package 1 - Local/OUTWATS (Band N)

An originating-only service that delivers local, intraLATA and interLATA traffic to the customer. Blocking is performed by the Company on some traffic types as detailed in f., following.

b. Package 2 - OUTWATS (Band 9)

An originating-only service that delivers intraLATA/interstate and all interLATA traffic to the customer. Local and intraLATA/intrastate traffic is retained and delivered by the Company. The Company will bill the end user directly for charges associated with local and intraLATA/ intrastate usage, at the applicable state intraLATA Band 0 OUTWATS rates. This arrangement is available only with CST2, CST3, Feature Groups C and D. In addition, the Company will retain or block certain traffic types as detailed in f., following.

c. Package 3 - Two-Way WATS (Band Y)

A two-way service that delivers local, intraLATA and interLATA traffic to the customer and completes traffic to an end user's premises. Blocking of certain traffic types is performed by the Company as detailed in f., following.

6. SWITCHED ACCESS SERVICE

6.3 COMMON SWITCHING, TRANSPORT TERMINATION AND LINE TERMINATION OPTIONAL FEATURES AND BSEs

6.3.1 COMMON SWITCHING OPTIONAL FEATURES AND BSEs

Q.2. (Cont'd)

d. Package 4 - Traditional WATS (Bands 1-6)

An originating-only service that delivers all interstate traffic to the customer for the banded (i.e., screened) serving areas that have been ordered by the customer. Calls that are destined to banded serving areas that are not ordered by the customer will be blocked by the Telephone Company. This arrangement is available only with CST2, CST3, Feature Groups C and D. In addition, the Telephone Company will retain or block certain traffic types as detailed in f., following.

e. Package 5 - INWATS

A terminating-only service that completes traffic to an end user's premises. This service is available in conjunction with a customer's 800/800-type Service.

f. The following matrix specifies the directionality, call type, service prefix and traffic type associated with the WATS Access Service Arrangements described preceding.

6. SWITCHED ACCESS SERVICE

6.3 COMMON SWITCHING, TRANSPORT TERMINATION AND LINE TERMINATION OPTIONAL FEATURES AND BSEs

6.3.1 COMMON SWITCHING OPTIONAL FEATURES AND BSEs

Q.2.f. (Cont'd)

	PKG.1 (BAND N)	PKG. 2 (BAND 9)	PKG. 3 (BAND Y)	PKG. 4 (BANDS 1-6)	PKG. 5
DIRECTION					
Originating-only	X	X		X	
Terminating-only					X
Two-way			X		
CALL TYPE					
Local	D	R	D	B	
IntraLATA/Intrastate	D	R	D/C	B	C
IntraLATA/Interstate	D	D	D/C	D	C
InterLATA/Intrastate	D	D	D/C	B	C
InterLATA/Interstate	D	D	D/C	D	C

X = Available with the Package arrangement
D = Telephone Company DELIVERS traffic to the customer
R = Telephone Company RETAINS and delivers traffic
C = Telephone Company COMPLETES traffic to the end user's premises
B = Telephone Company BLOCKS traffic to an announcement

6. SWITCHED ACCESS SERVICE

6.3 COMMON SWITCHING, TRANSPORT TERMINATION AND LINE TERMINATION OPTIONAL FEATURES AND BSEs

6.3.1 COMMON SWITCHING OPTIONAL FEATURES AND BSEs

Q.2.f. (Cont'd)

	PKG.1 (BAND N)	PKG. 2 (BAND 9)	PKG. 3 (BAND Y)	PKG. 4 (BANDS 1-6)	PKG. 5	
SERVICE PREFIX						
BOC Opr. (0-)	B	R	B	R		
IEC Opr. (00)	D	D	D	D		
0+	B	B	B	B		
IDDD (01)	B	B	B	B		
IDDD (011)	D	D	D	B		
1+	D	D	D	D		
101XXXX	B	B	B	B		(C)
No prefix	B	B	B	B		
TRAFFIC TYPE						
411	B	R	B	B		
499/976	B	B	B	B		
551/611	D	R	D	R		
500	B	B	B	B		
555	D	R	D	B		
700	D	D	D	D		
8XX-originating	B	B	B	B		
800/800-type-terminating			C		C	
900	B	B	B	B		
911	B	B	B	B		
950	B	B	B	B		
Vacant code	B	B	B	B		

D = Company DELIVERS traffic to the customer
R = Company RETAINS and delivers traffic
C = Company COMPLETES traffic to the end user's premises
B = Company BLOCKS traffic to an announcement

6. SWITCHED ACCESS SERVICE

6.3 COMMON SWITCHING, TRANSPORT TERMINATION AND LINE TERMINATION OPTIONAL FEATURES AND BSEs

6.3.1 COMMON SWITCHING OPTIONAL FEATURES AND BSEs

Q. WATS Access Service (WATS) (Cont'd)

3. WATS Access Service Options

WATS Access Service Options are available in conjunction with the WATS Access Service Arrangements detailed in 2., preceding. These options are provided in Company designated WATS Serving Offices and are available for use with WATS Access Service only. WATS Access Service Options are available in conjunction with Lineside and Trunkside Access, as specified herein.

a. Band Advance

This option, which is provided in association with two or more WATS Access Line groups, provides for the automatic overflow of terminating calls to a WATS Access Line group, when that group has exceeded its call capacity, to another WATS Access Line group.

b. End Office End User Line Screening

This option provides the ability to verify that an end user has dialed a called party address (by screening the called NPA and/or NXX on the basis of geographical bands selected by the Telephone Company) which is in accordance with that end user's service agreement with the customer (e.g., WATS). This option is available only with CST2, CST3, Feature Groups C or D and originating WATS Access Lines.

c. Hunt Group

This option provides the ability to access sequentially one of two or more WATS Access Lines in the terminating direction, when the hunting number of the WATS Access Line group is forwarded from the customer to the Telephone Company.

6. SWITCHED ACCESS SERVICE

6.3 COMMON SWITCHING, TRANSPORT TERMINATION AND LINE TERMINATION OPTIONAL FEATURES AND BSEs

6.3.1 COMMON SWITCHING OPTIONAL FEATURES AND BSEs

Q.3. (Cont'd)

d. Uniform Call Distribution

This option provides a type of multiline hunting which provides for an even distribution of terminating calls among the available WATS Access Lines in the hunt group.

e. Nonhunting Number for Use with Hunt Group or Uniform Call Distribution

This option provides for an individual WATS Access Line that is within a multiline hunt or uniform call distribution group, to provide access to the WATS Access Service within the hunt or uniform call distribution group when it is idle or provides busy tone when it is busy, when the nonhunting number is dialed.

f. The following matrix specifies which WATS Access Service Options as described in a. - e., preceding, are available with the WATS Access Service Arrangements.

OPTION	PKG.1 (BAND N)	PKG. 2 (BAND 9)	PKG. 3 (BAND Y)	PKG. 4 (BANDS 1-6)	PKG. 5
a.					X
b.				X	
c.			X		X
d.			X		X
e.			X		X

6. SWITCHED ACCESS SERVICE

6.3 COMMON SWITCHING, TRANSPORT TERMINATION AND LINE TERMINATION OPTIONAL FEATURES AND BSEs

6.3.1 COMMON SWITCHING OPTIONAL FEATURES AND BSEs (Cont'd)

R. InterLATA Toll Denial

This option provides the screening of all calls on terminating CSL and FGA lines and for the completion only of calls to 411, 611, 911, 800/800-type, 555-1212, Local Information Delivery Services and 0+ or 1+ intraLATA. All interLATA calls, 950-XXXX or 101XXXX are routed to a recorded announcement. (C)

This feature is provided in all Company end offices where technically available. It is available with CSL and Feature Group A. This feature does not affect calls placed on originating CSL and FGA lines.

Customers requesting Lineside Access without the InterLATA Toll Denial option, will be responsible for InterLATA calls recorded on CSL and FGA line(s).

S. 950 on FGD and CST3

1. 950 on FGD

Feature Group D (FGD) Access Service, as set forth in 6.2.4, preceding, may be ordered to route calls from a designated 950-XXXX access code to FGD access service. When a customer has FGD access service and does not have Feature Group B access service from a particular end office, 950 on FGD may be ordered to activate a customer's designated 950-XXXX access code in that end office. This will allow the Company to direct those designated 950-XXXX calls dialed by the customer's end users to the customer's FGD access service.

(D)

6. SWITCHED ACCESS SERVICE

6.3 COMMON SWITCHING, TRANSPORT TERMINATION AND LINE TERMINATION OPTIONAL FEATURES AND BSEs

6.3.1 COMMON SWITCHING OPTIONAL FEATURES AND BSEs

S.1. (Cont'd)

When a customer has both FGB and FGD access service and orders 950 on FGD in a particular end office, the Company will direct those designated 950-XXXX calls dialed by the customer's end users to the customer's FGD access service in that end office.

In both methods, the customer must be prepared to handle normally dialed FGD calls, as well as calls dialed with the designated 950-XXXX access code which requires the customer to receive additional address signaling. Such calls will be rated as FGD.

950 on FGD will be provided from Company end offices and tandems, where technically feasible. Effective with the date of this tariff (July 1, 1998) 950 on FGD is available only to customers where the 950 carrier identification code is the same as the FGD carrier identification code. The customer must specify the end office where 950 on FGD is to be activated to allow calls from a designated 950-XXXX access code to be routed over FGD access service. The customer is precluded from having originating 950 on FGD and originating FGB in the same end office utilizing the same 950-XXXX CIC. (C) (C)

2. 950 on CST3

CST3 Access Service as set forth in 6.2.6, preceding, may be ordered to route calls from a designated 950-XXXX access code to CST3 access service. When a customer has CST3 access service and does not have CST1 access service from a particular end office, 950 on CST3 may be ordered to activate a customer's designated 950-XXXX access code in that end office. This will allow the Company to direct those designated 950-XXXX calls dialed by the customer's end users to the customer's CST3 access service.

When a customer has both CST1 and CST3 access service and orders 950 on CST3 in a particular end office, the Company will direct those designated 950-XXXX calls dialed by the customer's end users to the customer's CST3 access service in that end office.

6. SWITCHED ACCESS SERVICE

6.3 COMMON SWITCHING, TRANSPORT TERMINATION AND LINE TERMINATION OPTIONAL FEATURES AND BSEs

6.3.1 COMMON SWITCHING OPTIONAL FEATURES AND BSEs

S.2. (Cont'd)

In both methods, the customer must be prepared to handle normally dialed CST3 calls, as well as calls dialed with the designated 950-XXXX access code which requires the customer to receive additional address signaling. Such calls will be rated as CST3.

950 on CST3 will be provided from Company end offices and tandems, where technically feasible. Effective with the date of this tariff (July 1, 1998) 950 on CST3 is available only to customers where the 950 carrier identification code is the same as the CST3 carrier identification code. The customer must specify the end office where 950 on CST3 is to be activated to allow calls from a designated 950-XXXX access code to be routed over CST3 access service. The customer is precluded from having originating 950 on CST3 and originating CST1 in the same end office utilizing the same 950-XXXX CIC. (C) | (C)

T. Call Transfer (BSE)

This option allows the customer to transfer an incoming call to a third party or add a third party to an existing incoming call, forming a three party connection, and then to leave the connection without disconnecting the call. This feature is provided only in suitably equipped end offices with CSL and FGA.

U. Three-Way Calling (BSE)

This option allows a customer to add a third party to an established local or long distance connection without the assistance of an operator. The third party is called by the customer initiating the Three-Way Calling on either a local or long distance basis. This feature is provided only in suitably equipped end offices with CSL and FGA.

V. Caller Identification - Number (ICLID) (BSE)

Caller Identification - Number (ICLID) provides the customer with the calling party's directory number at the time the call is received. The calling number is transmitted to the customer during the first silent interval of the ringing cycle. The number is displayed on customer-provided equipment. This option is only available from appropriately equipped Company electronic end office switches with CSL and FGA. Technical specifications are delineated in Technical Reference TR-NWT-000031.

6. SWITCHED ACCESS SERVICE

6.3 COMMON SWITCHING, TRANSPORT TERMINATION AND LINE TERMINATION OPTIONAL FEATURES AND BSEs

6.3.1 COMMON SWITCHING OPTIONAL FEATURES AND BSEs (Cont'd)

W. Caller Identification - Bulk (BCLID) (BSE)

Caller Identification - Bulk (BCLID) allows a customer with a CSL or FGA Switched Access multiline hunt group to receive call-related information at the time a call is received. The following call related information is transmitted per incoming call:

- The calling and called directory number (DN)
- The time of day the call was placed
- The busy/idle status of the called DN
- The calling line type (individual or group)

A DNAL is required between the customer's FGA dial tone office and the customer's premises for the transmission of the call-related data. The Call Data input/output Central Office Facility provides the central office facilities necessary to transmit Call Data Information over the DNAL. (T)

The customer shall be responsible for the provision of a compatible Customer Premises Equipment (CPE) modem which will receive, translate, display and/or store the transmitted data**.** The modem speed is dependent on the type of DNAL provided as set forth in 6.2.10, preceding. The installation, repair and technical capability of that equipment to function in conjunction with the service specified herein is the responsibility of the customer. (T) (T)

For incoming calls from callers served by PBXs, only the main number of the PBX will be transmitted. For incoming calls from callers in a multiline hunt group, only the main number of the hunt group will be transmitted.

Caller Identification-Bulk will be provided where technically feasible with CSL and FGA service. Technical specifications are delineated in Technical Reference TR-NWT-000032.

6. SWITCHED ACCESS SERVICE

6.3 COMMON SWITCHING, TRANSPORT TERMINATION AND LINE TERMINATION OPTIONAL FEATURES AND BSEs

6.3.1 COMMON SWITCHING OPTIONAL FEATURES AND BSEs (Cont'd)

X. Message Delivery Service (BSE) and Message Delivery Service - Interoffice (BSE) (C) (C)

Message Delivery Service (MDS) and Message Delivery Service - Interoffice (MDSI) transmits call-related information pertaining to all incoming telephone calls to the customer's Switched Access CSL or FGA multiline hunt group. (C) (C) (T)

MDS and MDSI are available in technically equipped Company-designated electronic end office switches with CSL or FGA Switched Access Services. Technical specifications are delineated in Technical Reference TR-NWT-000283. (C) (T) (M)

Rates and charges for MDS and MDSI are set forth in 6.8.2, following, (N)

1. Message Delivery Service (BSE) (N)

MDS call-related information includes the following: (T)

- The called directory number. (T)
- The calling directory number (if the central office switch that serves the calling party is connected to the same Company Common Channel Signaling Network as the central office switch serving the MDS customer and is equipped with the appropriate software). (T) (T)
- An indication that the call was forwarded as the result of a busy condition, don't answer condition or if the call was a direct dialed call. (T) (T)

A DNAL, provided as set forth in 6.2.10, preceding, is required between the customer's CSL or FGA dial tone office and the customer's premises for the transmission of the call-related information to the customer's premises. (T)

Certain material previously found on this page can now be found on Page 6-138.
Certain material found on this page formerly appeared on page 6-138.

6. SWITCHED ACCESS SERVICE

6.3 COMMON SWITCHING, TRANSPORT TERMINATION AND LINE TERMINATION OPTIONAL FEATURES AND BSEs

6.3.1 COMMON SWITCHING OPTIONAL FEATURES AND BSEs

X.1. (Cont'd)

In addition to Switched Access CSL or FGA service and the DNAL, the following MDS rate categories are required as described following:

- The Call Data input/output Central Office Facility is assessed per DNAL connection. The Call Data input/output Central Office Facility provides the central office facilities necessary to transmit the call-related information over the DNAL.

- The MDS Arrangement is assessed per CSL or FGA multiline hunt group arrangement. The MDS Arrangement allows call-related information for calls forwarded to lines arranged in a multiline hunt group to be directed to the associated Call Data input/output Central Office Facility.

- The Call Data charge is assessed per CSL or FGA line in the multiline hunt group. The Call Data allows lines arranged in a multiline hunt group to identify the specific terminal number of the call received as part of the call-related information directed to the associated Call Data input/output Central Office Facility.

The customer must order a DNAL, CSL or FGA Switched Services and the MDS (BSE) at each central office where the customer has clients. More than one CSL or FGA multiline hunt group may be served by the same DNAL and Call Data input/output Central Office Facility where the central office switch type permits. When used in conjunction with a Message Waiting Indication feature, the customer must have compatible message desk customer-provided equipment.

The customer shall be responsible for the provision of a compatible Customer Premises Equipment (CPE) modem that will receive, translate, display and/or store the transmitted call-related information. The modem speed is dependent on the type of DNAL provided as set forth in 6.2.10, preceding. The installation, repair and technical capability of that equipment to function in conjunction with the service specified herein is the responsibility of the customer. (T) (T)

6. SWITCHED ACCESS SERVICE

6.3 COMMON SWITCHING, TRANSPORT TERMINATION AND LINE TERMINATION OPTIONAL FEATURES AND BSEs

6.3.1 COMMON SWITCHING OPTIONAL FEATURES AND BSEs

X. Message Delivery Service (BSE) and Message Delivery Service - Interoffice (BSE) (Cont'd) (T) (T)

2. Message Delivery Service - Interoffice (BSE) (N)

MDSI call-related information includes the following:

- The 10- digit called directory number.
- The 10-digit calling directory number (if the central office switch that serves the calling party is connected to the same Company Common Channel Signaling Network as the central office switch serving the MDSI customer and is equipped with the appropriate software).
- An indication that the call was forwarded as the result of a busy condition, don't answer condition or if the call was a direct dialed call.

A DNAL, provided as set forth in 6.2.10, preceding, is required between the customer's CSL or FGA dial tone office (i.e., MDSI hub office) and the customer's premises for the transmission of the call-related information to the customer's premises. (N)

6. SWITCHED ACCESS SERVICE

6.3 COMMON SWITCHING, TRANSPORT TERMINATION AND LINE TERMINATION OPTIONAL FEATURES AND BSEs

6.3.1 COMMON SWITCHING OPTIONAL FEATURES AND BSEs

X.2. (Cont'd) (T)

In addition to Switched Access CSL or FGA service and the DNAL, the following MDSI rate categories are required as described following: (N)

- The Call Data input/output Central Office Facility is assessed per DNAL connection. The Call Data input/output Central Office Facility provides the central office facilities necessary to transmit the call-related information over the DNAL.

- The MDSI Arrangement is assessed per CSL or FGA multiline hunt group arrangement. The MDSI Arrangement allows call-related information for calls forwarded to lines arranged in a multiline hunt group to be directed to the associated Call Data input/output Central Office Facility.

- The Call Data - Interoffice charge is assessed per CSL or FGA line in the multiline hunt group. The Call Data - Interoffice allows lines arranged in a multiline hunt group to identify the specific terminal number of the call received as part of the call-related information directed to the associated Call Data input/output Central Office Facility. (N)

6. SWITCHED ACCESS SERVICE

6.3 COMMON SWITCHING, TRANSPORT TERMINATION AND LINE TERMINATION OPTIONAL FEATURES AND BSEs

6.3.1 COMMON SWITCHING OPTIONAL FEATURES AND BSEs

X.2. (Cont'd)

The customer must have a Switched Access CSL or FGA multiline hunt group in the same central office switch where the DNAL, Call Data input/output Central Office Facility, MDSI arrangement and Call Data - Interoffice terminate. More than one CSL or FGA multiline hunt group may be served by the same DNAL and Call Data input/output Central Office Facility where the central office switch type permits. When used in conjunction with a Message Waiting Indication feature, the customer must have compatible message desk customer-provided equipment.

The MDSI customer receives their call-related information from all central offices within the LATA served by the same Company Common Channel Signaling Network at the MDSI hub office.

The customer shall be responsible for the provision of compatible Customer Premises Equipment (CPE) modem that will receive, translate, display and/or store the transmitted call-related information. The modem speed is dependent on the type of DNAL provided as set forth in 6.2.10, preceding. The installation, repair and technical capability of that equipment to function in conjunction with the service specified herein is the responsibility of the customer. (T) (T)

MDSI traffic volumes may require the customer and the Company to cooperatively negotiate for more than one MDSI service arrangement. The Company maintains its right to limit growth of an existing MDSI service arrangement or the installation of a new MDSI service arrangement based on available capacity of the end office switch and/or its associated network when the Company determines that such growth could overload Company or customer facilities and impair the provision of acceptable service levels as described in 6.5.1, following.

6. SWITCHED ACCESS SERVICE

6.3 COMMON SWITCHING, TRANSPORT TERMINATION AND LINE TERMINATION OPTIONAL FEATURES AND BSEs

6.3.1 COMMON SWITCHING OPTIONAL FEATURES AND BSEs (Cont'd)

Y. *DID* Trunk Queuing and Basic Announcement (BSE)

Direct Inward Dial (*DID*) Trunk Queuing is a network capability that allows customers to receive and hold calls coming into a busy *DID* trunk group. The service will place these calls in a queue, to be held until a trunk between the serving wire center and the customer's CPE is available. When a trunk becomes available, in the same order of call arrival a call will drop out of queue and be connected to the trunk. Calls held in queue will hear ringing.

- Delay Announcement

  This option allows for incoming calls held in queue to hear a recorded announcement after a predetermined amount of time. The standardized announcement can be accessed a maximum of four times. Depending upon the customer's choice, ringing or silence will be returned after each announcement.

  The provision of this feature requires that the customer subscribe to a sufficient number of facilities to adequately handle the volume of incoming calls.

  The customer must specify the number of calls (maximum of 255) held in queue. In addition, the customer must specify the length of time a call is held in queue before going to delay announcements. The customer must also specify the number of announcements (maximum of four) and the amount of time between announcements. Changes to these values may only be made through the issuance of a service order. A nonrecurring charge as set forth in 6.8.2, following, will apply.

  All *DID* station numbers on a *DID* trunk group must be equipped with trunk queuing. This option is available with *DID* Switched Access Service in suitably equipped end offices.

6. SWITCHED ACCESS SERVICE

6.3 COMMON SWITCHING, TRANSPORT TERMINATION AND LINE TERMINATION OPTIONAL FEATURES AND BSEs

6.3.1 COMMON SWITCHING OPTIONAL FEATURES AND BSEs (Cont'd)

Z. Make Busy (BSE)

Make Busy provides a method for making lines appear busy to the serving wire center while they are in an idle state. This function would also allow a customer to have all incoming calls routed to another location upon activation of a CPE device. Calls to these lines will either encounter a busy condition or be completed to the alternate location, transparently to the caller. The capability is activated by a customer provided key at the customer's premises. The activation signal is transmitted to the serving wire center via a DNAL, provided as set forth in 6.2.10, preceding, for each key. This option is available with CSL and FGA where technically feasible. Technical specifications are delineated in Technical Reference TR-TSY-000569. (C)

AA. Call Forwarding Variable (BSE)

Call Forwarding Variable permits the customer to initiate call forwarding/automatic transfer of all incoming calls to another telephone number on an as-needed basis. Calls can be forwarded to most telephone numbers either inside or outside the customer's local calling area. Once the customer establishes Call Forwarding, it remains in effect until it is cancelled by the customer. The customer cannot answer calls once this feature is activated. Call Forwarding Variable is provided in suitably equipped end offices and is available with CSL and FGA.

6. SWITCHED ACCESS SERVICE

6.3 COMMON SWITCHING, TRANSPORT TERMINATION AND LINE TERMINATION OPTIONAL FEATURES AND BSEs

6.3.1 COMMON SWITCHING OPTIONAL FEATURES AND BSEs (Cont'd)

AB. Queuing for Use With UCD (BSE)

- Queuing

  An arrangement whereby incoming calls that are placed to lines within a UCD system can be held in queue if all lines within the system are busy. Calls in queue will be held in their order of arrival until a line becomes available. Calls in queue are served on a first-in first-out basis. Calls held in queue will hear ringing until answered.

- Delay Announcement

  This option allows for incoming calls held in queue to hear a recorded announcement after a predetermined amount of time. The standardized announcement can be accessed a maximum of four times. Depending upon the customer's choice, ringing or silence will be returned after each announcement.

  The provision of this feature requires that the customer subscribe to a sufficient number of facilities to adequately handle the volume of incoming calls.

  The customer must specify the number of calls (maximum of 255) held in queue. In addition, the customer must specify the length of time a call is held in queue before going to delay announcement. The customer must also specify the number of announcements (maximum of four) and the amount of time between announcements. Changes to these values may only be made through the issuance of a service order. A nonrecurring charge as set forth in 6.8.2, following, will apply.

  Queuing on UCD will only be provided where technically feasible and is available with CSL and FGA.

6. SWITCHED ACCESS SERVICE

6.3 COMMON SWITCHING, TRANSPORT TERMINATION AND LINE TERMINATION OPTIONAL FEATURES AND BSEs

6.3.1 COMMON SWITCHING OPTIONAL FEATURES AND BSEs (Cont'd)

AC. Signaling System Seven (SS7) Out of Band Signaling

This option provides SS7 out of band signaling on a CST3 or FGD transmission path group. This option provides the customer the ability to use out of band signaling to set up trunks on a per call basis. CCSAC Service as described in 20.2.1, following, is required between the customer's Signaling Point of Interface (SPOI) and the Telephone Company's Signal Transfer Point (STP) for SS7 out of band signaling in each LATA.

SS7 out of band signaling provides the automatic transmission of the following parameters:

1. Access Transport Parameter (ATP) provides automatic transmission of information from the originating calling location through the Common Channel Signaling Network. Information supplied using ATP may consist of one or more of the following: Called Party Subaddress; Calling Party Subaddress; High and Low Layer Compatibility and Compatibility Checking by the called party's equipment. ATP is available when Feature Group D or CST3 service is equipped with SS7 out of band signaling and Clear Channel Capability. (T)

2. Calling Party Number (CPN) is the automatic transmission of the calling party's ten-digit telephone number to the customer's premises for calls originating in the LATA. The ten-digit number consists of the Numbering Plan Area (NPA) plus the seven-digit telephone number. The Company will automatically transmit CPN with SS7 out of band signaling in those offices suitably equipped with the software that allows customers to elect to block their CPN information from being displayed to the called party. This software allows the customer to block their CPN on a per call basis, and transmits a "privacy indicator" as part of the CPN information. (T)

3. Charge Number is the SS7 out of band signaling equivalent of the 10-digit ANI telephone number. Charge Number is the automatic transmission of the ten-digit billing number of the calling station and the originating line information when a CST3 or FGD trunk group is provisioned with SS7 out of band signaling. Charge Number is provided when the customer requests the ANI optional feature or ANI (BSE) on FGD or CST3 trunk groups provisioned with SS7 out of band signaling. (T)

6. SWITCHED ACCESS SERVICE

6.3 COMMON SWITCHING, TRANSPORT TERMINATION AND LINE TERMINATION OPTIONAL FEATURES AND BSEs

6.3.1 COMMON SWITCHING OPTIONAL FEATURES AND BSEs

AC.3. (Cont'd)

Charge Number information is provided based on the following requirements:

a. the telephone number and billing information may be used for billing and collection, routing, screening, and completion of the originating subscriber's call or transaction, or for services directly related to the originating subscriber's call or transaction;

b. the Charge Number information shall not be reused or resold without notifying the originating subscriber and obtaining the affirmative consent of such subscriber for such reuse or resale; and

c. Charge Number information shall not be disclosed, except as permitted by a. and b., above, for any purpose other than:

- performing the services or transactions that are the subject of the originating subscriber's call,
- ensuring network performance security, and the effectiveness of call delivery,
- compiling, using and disclosing aggregate information, and
- complying with applicable law or legal process.

4. Carrier Selection Parameters (CSP) is the automatic transmission of a signaling indicator which signifies to the customer that the call being processed originated from a presubscribed line or by dialing the 101XXXX Code.

Certain material previously found on this page can now be found on Page 6-143.1.

6. SWITCHED ACCESS SERVICE

6.3 COMMON SWITCHING, TRANSPORT TERMINATION AND LINE TERMINATION OPTIONAL FEATURES AND BSEs

6.3.1 COMMON SWITCHING OPTIONAL FEATURES AND BSEs

AC. Signaling System Seven (SS7) Out of Band Signaling (Cont'd)

5. Carrier Identification Parameter (CIP)

Carrier Identification Parameter is an optional feature which identifies and transmits the Carrier Identification Code (CIC) of the presubscribed carrier or the Access Code (101XXXX) dialed by the calling party to the customer as part of the Initial Address Message (IAM). CIP is available with originating CST3 and Feature Group D Switched Access Service from suitably equipped SS7 end offices and tandems on a per trunk basis. The CIP optional feature requires the customer to purchase CCSAC Service as set forth in Section 20, following. The description and application of rates and charges are set forth in 6.7.1, following. (T)

The technical specifications for ATP, CPN, CSP and CIP parameters are described in Technical References GR-905-CORE, GR-394-CORE and in U S WEST Communications Technical Publication 77342.

When rearranging signaling to SS7 out of band signaling, a SS7 Out of Band Signaling Rearrangement Charge applies as described in 6.7.1.C.5., following.

6. SWITCHED ACCESS SERVICE

6.3 COMMON SWITCHING, TRANSPORT TERMINATION AND LINE TERMINATION OPTIONAL FEATURES AND BSEs

6.3.1 COMMON SWITCHING OPTIONAL FEATURES AND BSEs (Cont'd)

AD. Clear Channel Capability (BSE)

Clear Channel Capability (CCC) is the ability to send any combination of ones (marks) and zeros (spaces) in the 192 information bits of each frame. This permits 24 DSO-64 kbps services or 1.536 Mbps of customer information on the 1.544 Mbps line rate.

Bipolar Eight Zero Substitution (B8ZS) line code conformity is required. The B8ZS line code is described in Technical Reference GR-334-CORE.

CCC is available on CST3 or FGD service when the trunkside service is equipped with SS7 Out of Band Signaling and Interface Group 6 or 9 on separate trunk(s) in suitably equipped digital Company end offices or access tandems. CCC may be (T)
utilized in conjunction with 800 DB Access Service for transmission of 8XX data (C)
traffic where technically feasible. (C)

CCC equipped trunkside service requires a specific traffic type (i.e., CCC Originating and/or CCC Terminating) as set forth in 6.1.1, preceding.

The description and application of rates and charges for CCC are set forth in 6.7.1.O., following.

6. SWITCHED ACCESS SERVICE

6.3 COMMON SWITCHING, TRANSPORT TERMINATION AND LINE TERMINATION OPTIONAL FEATURES AND BSEs (Cont'd)

6.3.2 TRANSPORT TERMINATION OPTIONAL FEATURES AND BSEs

A. Operator Trunk - Coin, Non-Coin, or Combined Coin and Non-Coin (T)

This option may be ordered to provide coin, non-coin, or combined coin and non-coin operation. It is available only with CST2, CST3, Feature Group C and D. Non-coin trunks are provided in Company electronic and electromechanical end offices. Coin and combined coin and non-coin trunks are provided only at Company electronic end offices and other Company end offices where equipment is available. This option is provided as a trunk type of Transport Termination and is not available with SS7 out of band signaling. (T) (T)

1. Coin

This arrangement provides initial coin return control and routing of 00+, 00-, 0+, 0-, 1+, 01+ or 011+ prefixed originating coin calls requiring operator assistance to the customer's premises. Because operator assisted coin calling traffic is routed over a trunk group dedicated to operator assisted calls, this arrangement is only provided in association with the Service Class Routing option.

The operator assistance coin calling arrangement is normally ordered by the customer in conjunction with the ANI optional feature, since the preponderance of trunk groups equipped with this arrangement will be terminated in the customer's operator service positions, rather than in the customer's manual cord boards.

2. Non-Coin

This arrangement provides the routing of 00+, 00-, 0+, 0-, 1+, 01+ or 011+ prefixed originating non-coin calls requiring operator assistance to the customer's premises. Because operator assisted non-coin calling traffic is routed over a trunk group dedicated to operator assisted calls, this arrangement is only provided in association with the Service Class Routing option.

Certain material found on this page formerly appeared on Pages 6-57, 6-65, 6-83 and 6-89.

6. SWITCHED ACCESS SERVICE

6.3 COMMON SWITCHING, TRANSPORT TERMINATION AND LINE TERMINATION OPTIONAL FEATURES AND BSEs

6.3.2 TRANSPORT TERMINATION OPTIONAL FEATURES AND BSEs

A.2. (Cont'd)

The operator assistance non-coin calling arrangement is normally ordered by the customer in conjunction with the ANI optional feature, since the preponderance of trunk groups equipped with this arrangement will be terminated in the customer's operator service positions, rather than in the customer's manual cord boards. When so equipped, the ANI feature provides the forwarding of information digits which identify that the call has originated from a hotel or motel, and whether room number identification is required, or that special screening is required, e.g., for coinless public stations, dormitory or inmate stations, or other screening arrangements agreed to between the customer and the Company. (T)

3. Combined Coin and Non-Coin

This arrangement provides initial coin return control and routing of 00+, 00-, 0+, 0-, 1+, 01+ or 011+ prefixed originating operator assisted coin and non-coin calls requiring operator assistance to the customer's premises. Because operator assisted coin and non-coin calling traffic is routed over a trunk group dedicated to operator assisted calls, this arrangement is only provided in association with the Service Class Routing option.

This arrangement is normally ordered by the customer in conjunction with the ANI optional feature, since the preponderance of trunk groups equipped with this arrangement will be terminated in the customer's operator services systems, rather than in the customer's manual cord boards. When so equipped, the ANI optional features provide the forwarding of information digits which identify that the call has originated from a hotel or motel, and whether room number identification is required, or that special screening is required, e.g., for coinless pay telephones, (T)
dormitory or inmate stations, or other screening arrangements agreed to between the customer and the Company. (T)

6. SWITCHED ACCESS SERVICE

6.3 COMMON SWITCHING, TRANSPORT TERMINATION AND LINE TERMINATION OPTIONAL FEATURES AND BSEs

6.3.2 TRANSPORT TERMINATION OPTIONAL FEATURES AND BSEs (Cont'd)

B. Operator Trunk - Full Feature

This option provides the operator functions available in the end office to the customer's operator. These functions are (1), Operator Released; (2), Operator Attached; (3), Coin Collect; (4), Coin Return and (5), Ringback. It is available with CST3 and Feature Group D and is provided as a trunk type of Transport Termination. This option is not available with SS7 out of band signaling.

6.3.3 LINE TERMINATION OPTIONAL FEATURES AND BSEs

SEE 6.8 FOLLOWING, FOR SERVICE AVAILABILITY IN EACH STATE.

A. Answer Supervision for Use with WATS Access Service

WATS Access Service, as described in 6.3.1.Q., preceding, may be ordered with Answer Supervision for originating Access Service. When the terminating end user answers, this option will provide a signal to the originating end user, provided that the customer has passed Answer Supervision to the Company. The exact timing of Answer Supervision is dependent upon the customer. Answer Supervision will be provided on an effective two-wire or effective four-wire transmission path, as available. Such transmission path will be associated with a trunk side arrangement at a suitably equipped WATS Serving Office, with loop- (T)
reverse battery as delineated in Technical Reference GR-334-CORE. (T)

The Answer Supervision option is provided with Dial-Tone that can be used with Dial-Pulse (DP), or Dual-Tone Multifrequency (DTMF), or Multifrequency (MF) Signaling, where provided.

This option is available in suitably equipped Company WATS Serving Offices and is available only with CTS1, CST2, CST3, Feature Groups B, C and D.

6. SWITCHED ACCESS SERVICE

6.3 COMMON SWITCHING, TRANSPORT TERMINATION AND LINE TERMINATION OPTIONAL FEATURES AND BSEs

6.3.3 LINE TERMINATION OPTIONAL FEATURES AND BSEs (Cont'd)

B. Answer Supervision - Lineside (BSE)

This option provides the capability to deliver "off-hook" supervisory signals from the terminating central office switch to a lineside interface at the originating central office switch. These signals indicate when the called station has answered an incoming call. Answer Supervision will only be provided where technically feasible with CSL and FGA.

6. SWITCHED ACCESS SERVICE

6.4 TECHNICAL SPECIFICATIONS (T)

Each Switched Access Service transmission path is provided with standard transmission parameter limits. The standard for a particular transmission path is (T) dependent on the Switched Access Service, Interface Group and whether the service is directly routed to an end office or routed to the access tandem or a customer-provided tandem utilizing tandem switching functions. The available transmission parameter limits are set forth in 6.4.1, following. Data transmission (T) parameter limits are also provided with each Switched Access Service (T) transmission path. The Company will, upon notification by the customer that the data transmission parameter limits set forth in 6.4.2.A. or 6.4.2.B., following, are (T) not being met, conduct tests independently or in cooperation with the customer, and take any necessary action to ensure that the data parameters are met.

The Company will maintain existing transmission parameter limits on (T) functioning service configurations installed prior to the effective date of this Tariff except that service configurations having performance specifications exceeding the standards listed in this provision will be maintained at performance levels specified in this Tariff.

The transmission parameter limits contained in this section are Immediate Action (T) Limits (IAL). Acceptance Limits (AL) are set forth in Technical Reference GR- | 334-CORE. This technical reference also provides the basis for determining (T) Switched Access Service maintenance limits.

Certain material previously found on this page can now be found on page 6-149.1.

6. SWITCHED ACCESS SERVICE

6.4 TECHNICAL SPECIFICATIONS (Cont'd)

Transmission specifications for SS7 out of band signaling are delineated in Technical References GR-394-CORE, GR-905-CORE and in U S WEST Communications Technical PUB 77342. (T)

Transmission specifications and error performance parameters for DS1 level digital transmission on CST3 or FGD service equipped with Clear Channel Capability are delineated in Technical Reference GR-334-CORE.

When Switched Access CST3 or FGD Service is provided via a customer-provided tandem premises, the technical transmission specifications for the customer-provided tandem must conform with the technical specifications established for Company access tandem switches. These specifications are described in Technical Reference FR-64 and GR-334-CORE. For CST3 or FGD trunks with tandem signaling information, the transmission parameter limits and interface combinations are delineated in Technical Reference GR-3334-CORE. (T)

6. SWITCHED ACCESS SERVICE

6.4 TECHNICAL SPECIFICATIONS (Cont'd) (T)

6.4.1 STANDARD TRANSMISSION PARAMETER LIMITS (T)

Following are descriptions of the standard transmission parameter limits available with Switched Access Services. Specific applications for Switched Access Services and Interface Groups with which the standard transmission parameter limits are provided are set forth in 6.2, preceding. (T) (T)

A. Transmission Type A1 Performance (T)

Transmission Type A1 performance is provided with the following IAL for CST3 or FGD Service: (T) (T)

1. Loss Deviation

The maximum Loss Deviation of the 1004 Hz loss relative to the Expected Measured Loss (EML) at 1004 Hz (dB) is 2.0 dB. (T)

2. Attenuation Distortion

The maximum Attenuation Distortion in the 404 to 2804 Hz frequency band relative to the loss at 1004 Hz is -1.5dB to + 3.5 dB. (T)

6. SWITCHED ACCESS SERVICE

6.4 TECHNICAL SPECIFICATIONS (T)

6.4.1 STANDARD TRANSMISSION PARAMETER LIMITS

A. Transmission Type A1 Performance (Cont'd) (T)

3. C-Message Noise

The maximum C-Message Noise for the transmission path at the IAL miles listed is less than or equal to: (T)

IAL MILEAGE LIMITS	C-MESSAGE NOISE
Less than 50	33 dBrnc0
51 to 100	35 dBrnc0
101 to 200	37 dBrnc0
201 to 400	40 dBrnc0
401 to 1000	42 dBrnc0 (T)

4. C-Notched Noise

The maximum C-Notched Noise, measured with -16 dBm0 holding tone applied, is less than or equal to 45 dBrnc0. (T) (T)

5. Echo Control

Echo Control, identified as Equal Level Echo Path Loss, and expressed as Echo Return Loss (ERL) and Singing Return Loss (SRL), is equal to or greater than the following: (T)

MEASURED AT THE POT	ERL	SRL	
• POT to End Office Direct	N/A	N/A	(T)
• POT to Access Tandem	25 dB	18 dB	
• POT to End Office via Access Tandem	16 dB	11 dB	(T)

6. SWITCHED ACCESS SERVICE

6.4 TECHNICAL SPECIFICATIONS (T)
6.4.1 STANDARD TRANSMISSION PARAMETER LIMITS (Cont'd) (T)

B. Transmission Type B Performance (T)

Transmission Type B performance is provided with the following IAL for CSL or FGA Service: (T) (T)

1. Loss Deviation

The maximum Loss Deviation of the 1004 Hz loss relative to the Expected Measured Loss (EML) at 1004 Hz (dB) is 2.5 dB. (T)

2. Attenuation Distortion

The maximum Attenuation Distortion in the 404 to 2804 Hz frequency band relative to loss at 1004 Hz is -2.0 dB to +4.0 dB.

3. C-Message Noise

The maximum C-Message Noise for the transmission path at the IAL miles listed is less than or equal to: (T)

IAL MILEAGE LIMITS	C-MESSAGE NOISE
Less than 50	35 dBrnc0
51 to 100	37 dBrnc0
101 to 200	40 dBrnc0
201 to 400	43 dBrnc0
401 to 1000	45 dBrnc0

(T)

(D)

(D)

6. SWITCHED ACCESS SERVICE

6.4 TECHNICAL SPECIFICATIONS (T)

6.4.1 STANDARD TRANSMISSION PARAMETER LIMITS

B. Transmission Type B Performance (Cont'd) (T)

4. C-Notched Noise

The maximum C-Notched Noise, measured with -16 dBm0 holding tone applied, (T)
is less than or equal to 47 dBrnc0. (T)

5. Echo Control

Echo Control is specified in dB as impedance balance at 4-wire interfaces for (T)
CSL or FGA Service. Echo Control is expressed as Echo Return Loss (ERL) and
Singing Return Loss (SRL) and is measured at the POT to First Point of
Switching (FPOS). Both the low-band and high-band tests must meet the SRL
limits specified. The ERL and SRL are greater than or equal to the following:

MEASURED AT THE POT	ERL	SRL	
• POT to FPOS 4-wire transmission	16 dB	11 dB	(T)

6. SWITCHED ACCESS SERVICE

6.4 TECHNICAL SPECIFICATIONS (T)
6.4.1 STANDARD TRANSMISSION PARAMETER LIMITS (Cont'd) (T)

C. Transmission Type B1 Performance (N)

Transmission Type B1 performance is provided with the following IAL for CST1, CST2, CST3, FGB, FGC or FGD Service:

1. Loss Deviation

The maximum Loss Deviation of the 1004 Hz loss relative to the EML at 1004 Hz (dB) is as follows:

	EML
• POT to End Office Direct	2.5 dB
• POT to Access Tandem	2.5 dB
• Access Tandem to End Office	2.5 dB
• POT to End Office via Access Tandem	3.0 dB (N)

6. SWITCHED ACCESS SERVICE

6.4 TECHNICAL SPECIFICATIONS (T)
6.4.1 STANDARD TRANSMISSION PARAMETER LIMITS
C. Transmission Type B1 Performance (Cont'd) (T)

2. Attenuation Distortion (N)

The maximum Attenuation Distortion in the 404 to 2804 Hz frequency band relative to loss at 1004 Hz is as follows:

4-WIRE	**LOSS AT 1004 HZ**
• POT to End Office Direct	-2.0 to +4.0
• POT to Access Tandem	-2.0 to +4.0
• Access Tandem to End Office	-2.0 to +4.0
• POT to End Office via Access Tandem	-2.0 to +5.5

2-WIRE	**LOSS AT 1004 HZ**
• POT to End Office Direct	-2.0 to +5.5
• POT to Access Tandem	-2.0 to +5.5
• Access Tandem to End Office	-2.0 to +5.5
• POT to End Office via Access Tandem	-2.0 to +6.5 (N)

6. SWITCHED ACCESS SERVICE

6.4 TECHNICAL SPECIFICATIONS (T)

6.4.1 STANDARD TRANSMISSION PARAMETER LIMITS

C. Transmission Type B1 Performance (Cont'd) (T)

3. C-Message Noise (N)

The maximum C-Message Noise for the transmission path at the IAL miles listed is less than or equal to the following:

IAL MILEAGE LIMITS	C-MESSAGE NOISE POT to EO Direct, POT to Access Tandem or Access Tandem to EO	C-MESSAGE NOISE POT to EO via Access Tandem
Less than 50	34 dBrnc0	35 dBrnc0
51 to 100	36 dBrnc0	37 dBrnc0
101 to 200	38 dBrnc0	39 dBrnc0
201 to 400 41 dBrnc0	42 dBrnc0	
401 to 1000 43 dBrnc0	44 dBrnc0	

(N)

6. SWITCHED ACCESS SERVICE

6.4 TECHNICAL SPECIFICATIONS (T)
6.4.1 STANDARD TRANSMISSION PARAMETER LIMITS
C. Transmission Type B1 Performance (Cont'd) (T)

4. C-Notched Noise (N)

The maximum C-Notched Noise, measured with -16 dBm0 holding tone applied, is less than or equal to the following:

C-NOTCHED NOISE

• POT to End Office Direct	47 dBrnc0
• POT to Access Tandem	47 dBrnc0
• Access Tandem to End Office	47 dBrnc0
• POT to End Office via AT	49 dBrnc0 (N)

6. SWITCHED ACCESS SERVICE

6.4 TECHNICAL SPECIFICATIONS (T)

6.4.1 STANDARD TRANSMISSION PARAMETER LIMITS

C. Transmission Type B1 Performance (Cont'd) (T)

5. Echo Control (N)

Echo Control is specified in dB and is expressed as Echo Return Loss (ERL) and Singing Return Loss (SRL) for CST1, CST2, CST3, FGB, FGC or FGD Service. Both the low-band and high-band tests must meet the SRL limits specified. The ERL and SRL are greater than or equal to the following:

IAL MEASURED AT THE POT 4-WIRE	**ERL**	**SRL**
• POT to End Office Direct	16 dB	11 dB
• POT to Access Tandem	21 dB	18 dB
• POT to EO via Access Tandem	16 dB	11 dB

IAL MEASURED AT THE POT 2-WIRE	**ERL**	**SRL**
• POT to End Office Direct	13 dB	6 dB
• POT to Access Tandem	N/A	N/A
• POT to EO via Access Tandem	13 dB	6 dB

(N)

6. SWITCHED ACCESS SERVICE

6.4 TECHNICAL SPECIFICATIONS (T)
6.4.1 STANDARD TRANSMISSION PARAMETER LIMITS (T)

D. Transmission Type C Performance (T)

Transmission Type C performance is provided with the following IAL for CSL or FGA Service: (T) (T)

1. Loss Deviation

The maximum Loss Deviation of the 1004 Hz loss relative to the Expected Measured Loss (EML) at 1004 Hz (dB) is 3.0 dB. (T)

2. Attenuation Distortion (M)

The maximum Attenuation Distortion in the 404 to 2804 Hz frequency band relative to loss at 1004 Hz is -2.0 dB to +5.5 dB.

3. C-Message Noise (M)

The maximum C-Message Noise for the transmission path at the IAL miles listed is less than or equal to: (T)

IAL MILEAGE LIMITS	C-MESSAGE NOISE
Less than 50	33 dBrnc0
51 to 100	39 dBrnc0
101 to 200	41 dBrnc0
201 to 400	43 dBrnc0
401 to 1000	45 dBrnc0 (T)

Certain material found on this page formerly appeared on Page 6-155.

6. SWITCHED ACCESS SERVICE

6.4 TECHNICAL SPECIFICATIONS (T)

6.4.1 STANDARD TRANSMISSION PARAMETER LIMITS

D. Transmission Type C Performance (Cont'd) (T)

4. C-Notched Noise

The maximum C-Notched Noise, measured with -16 dBm0 holding tone applied, (T)
is less than or equal to 47 dBrnc0. (T)

5. Echo Control (M)

Echo Control, for Transmission Type C performance, is measured at the POT to (T)
the first point of switching (FPOS). The Immediate Action Limits expressed as
Echo Return Loss (ERL) and Singing Return Loss (SRL) are not specified. (T)

(D)
(D)

Certain material previously found on this page can now be found on Page 6-154.

Certain material found on this page formerly appeared on Page 6-156.

6. SWITCHED ACCESS SERVICE

6.4 TECHNICAL SPECIFICATIONS (T)

6.4.2 VOICE BAND DATA TRANSMISSION PARAMETER LIMITS (T)

Voice band data transmission parameter limits type DA1, DB and DB1 are specified as Immediate Action Limits, Restoral Limits and Service Affecting Limits. Voice band data parameters apply from the POT to the first point of switching for CSL, CST1, FGA or FGB and to each segment between the POT and the EO for CST2, CST3, FGC or FGD service. Specific application for Switched Access Services and Interface Groups with which the voice band data transmission parameter limits are provided are set forth in 6.2, preceding. (C) (C) (T) (T)

The Company will work cooperatively with the customer to achieve the voice band data parameter transmission limits for the transmission path(s) as delineated in Technical Reference GR-334-CORE. (N) (N)

Certain material previously found on this page can now be found on Page 6-155.

6. SWITCHED ACCESS SERVICE

6.4 TECHNICAL SPECIFICATIONS

(D)

6. SWITCHED ACCESS SERVICE

6.4 TECHNICAL SPECIFICATIONS

(D)

6. SWITCHED ACCESS SERVICE

6.4 TECHNICAL SPECIFICATIONS

(D)

6. SWITCHED ACCESS SERVICE

6.5 OBLIGATIONS OF THE COMPANY

In addition to the obligations of the Company set forth in Section 2, preceding, the Company has certain other obligations pertaining only to the provision of Switched Access Service. These obligations are as follows:

6.5.1 NETWORK MANAGEMENT

The Company will administer its network to ensure the provision of acceptable service levels to all telecommunications users of the Company's network services.

Generally, service levels are considered acceptable only when both end users and customers are able to establish connections with little or no delay encountered within the Company network. The Company maintains the right to apply protective controls, i.e., those actions, such as call gapping, which selectively cancel the completion of traffic, over any traffic carried over its network, including that associated with a customer's Switched Access Service. Generally, such protective measures would only be taken as a result of occurrences such as failure or overload of Company or customer facilities, natural disasters, mass calling or national security demands. In the event that the protective controls applied by the Company result in the complete loss of service by the customer, the customer will be granted a Credit Allowance for Service Interruption as set forth in 2.4.4.B., preceding.

6. SWITCHED ACCESS SERVICE

6.5 OBLIGATIONS OF THE COMPANY (Cont'd)

6.5.2 DESIGN AND TRAFFIC ROUTING OF SWITCHED ACCESS SERVICE

When ordering Switched Access Service, the customer shall specify on the order for service the Entrance Facility, direct routing or tandem routing, the (T)
number of lines or trunks, and the desired directionality (i.e., one-way, two- (C)
way). When the customer orders facilities, routing, directionality or optional features different from that determined to be available by the Company, the Company will work cooperatively with the customer in determining an (T)
acceptable configuration based on available facilities, equipment and Company routing plans. Rates and charges for Switched Transport, as set forth in 6.8, (T)
following, will be applied based on the transport provisioned at the time the order is completed. For example, if direct routing to the end office is requested (T)
but facilities are not available and the customer accepts tandem routing, the rates for the tandem routing configuration shall apply until such time that direct routing to the end office is provided. (T)

6.5.3 DS1 RECORDS ASSIGNMENT

When the customer initially orders a DS3 EF with DS3 DTT facilities to a (C)
Company Hub, access tandem or end office, the Company will provide to the customer, the appropriate DS1 facility record necessary for the customer to identify circuit facility assignment (CFA). On subsequent orders utilizing existing DS3 Entrance Facilities or DS3 DTT facilities, the Company will assign the DS1 facility to the DS3 Entrance Facility or DS3 DTT facility as directed by the customer's order.

6.5.4 MULTIPLEXING

The Company will provide multiplexing equipment at a location determined by the Company as part of its overall network design when the conditions exist as set forth in 6.1.2, preceding.

6. SWITCHED ACCESS SERVICE

6.5 OBLIGATIONS OF THE COMPANY (Cont'd)

6.5.5 PROVISION OF SERVICE PERFORMANCE DATA

Subject to availability, end-to-end service performance data available to the Company through its own service evaluation routines, may also be made available to the customer based on previously arranged intervals and format. These data provide information on overall end-to-end call completion and non-completion performance, e.g., customer equipment blockage, failure results and transmission performance. These data do not include service performance data which are provided under other tariff sections, e.g., testing service results. If data are to be provided in other than paper format, the charges for such exchange will be determined on an individual case basis.

6.5.6 TRUNK GROUP MEASUREMENT REPORTS

Subject to availability, the Company will make available trunk group data, in the form of usage in CCS, peg count and overflow, to the customer based on previously agreed to intervals. Trunk group measurement reports will be available for Feature Group Switched Access Service, bundled *DID* Switched Access Service and WATS Access Service at no charge to the customer. (T) | (T)

6. SWITCHED ACCESS SERVICE

6.5 OBLIGATIONS OF THE COMPANY (Cont'd)

6.5.7 DETERMINATION OF NUMBER OF TRANSMISSION PATHS

DS1 and DS3 Entrance Facilities and DTT facilities requested by the customer are solely transport facilities capable of 24 and 672 channels, respectively, and do not reflect the actual switching capacity in the SWC, end office, access tandem, or Company Hub. The actual number of transmission paths provided will be based on the customer's line or trunk request. Subsequent assignment will be based on switching equipment available.

For Lineside or Trunkside Switched Access Service which is ordered on a per-line or per-trunk basis, the customer specifies the number of transmission paths in the order for service. (D)

(D)

6.5.8 DETERMINATION OF NUMBER OF END OFFICE TRANSPORT TERMINATIONS

For analog entry switches, a termination will be provided for each Feature Group or BSA line or trunk requested. For digital entry switches, an equivalent termination will be provided for each Feature Group or BSA line or trunk requested.

6. SWITCHED ACCESS SERVICE

6.5 OBLIGATIONS OF THE COMPANY (Cont'd)

6.5.9 DESIGN BLOCKING PROBABILITY

The Company will design and monitor the facilities used in the provision of Switched Access Services to meet the blocking probability criteria as set forth in A. through D., following.

A. For CSL, CST1, Feature Group A and B and *DID* Switched Access Services, no design blocking criteria apply.

B. For CST2 and Feature Group C, the design blocking objective will be no greater than one percent (.01) between the point of termination at the customer's premises and the first point of switching when traffic is directly routed without an alternate route. Standard traffic engineering methods will be used by the Company to determine the number of transmission paths required to achieve this level of blocking.

C. For CST3 and Feature Group D, the design blocking objective for the final group will be no greater than one percent (.01) between the point of termination at the customer's premises and the end office switch, whether the traffic is directly routed without an alternate route or routed via an access tandem. Standard traffic engineering methods as set forth in reference document Special Report SR-TAP-000191 Trunk Traffic Engineering Concepts and Applications will be used by the Company to determine the number of transmission paths required to achieve this level of blocking. (T)

D. The design blocking criteria for 500, 800 DB Access Service and 900 Access Service will be equivalent to the design blocking criteria of the basic serving arrangement that they are provisioned as, except under media stimulation when protective controls may be utilized to ensure the provisioning of acceptable service levels to all telecommunication users of the Company's network services. (S-y)

(y) Reissued matter filed under Transmittal No. 702 to become effective March 1, 1996.

6. SWITCHED ACCESS SERVICE

6.5 OBLIGATIONS OF THE COMPANY
6.5.9 DESIGN BLOCKING PROBABILITY (Cont'd)

E. The Company will perform routine measurement functions for the trunks ordered in accordance with Company design blocking criteria to assure that an adequate number of trunks are in service. The Company will recommend that additional trunks be ordered by the customer when additional trunks are required to reduce the measured blocking to the designed blocking level. Where design blocking criteria apply, the design blocking objective is assumed to have been met if the routine measurements show that the measured blocking does not exceed the thresholds listed in the following tables. (T) (C) (T) (T)

1. For transmission paths carrying only first routed traffic directly between an end office and a customer's premises without an alternate route, and for paths carrying only overflow traffic, the measured blocking thresholds are as follows:

NUMBER OF TRUNKS PER TRUNK GROUP	MEASURED BLOCKING THRESHOLDS IN THE TIME-CONSISTENT BUSY HOUR FOR THE NUMBER OF MEASUREMENTS PER TRUNK GROUP			
	15-20 MEASURE-MENTS	**11-14 MEASURE-MENTS**	**7-10 MEASURE-MENTS**	**3-6 MEASURE-MENTS**
2	.070	.080	.090	.140
3	.050	.060	.070	.090
4	.050	.060	.070	.080
5-6	.040	.050	.060	.070
7 or more	.030	.035	.040	.060

(T)
(T)

6. SWITCHED ACCESS SERVICE

6.5 OBLIGATIONS OF THE COMPANY
6.5.9 DESIGN BLOCKING PROBABILITY

E. (Cont'd)

2. For transmission paths carrying first-routed traffic between an end office and a customer's premises via an access tandem, the measured blocking thresholds are as follows:

NUMBER OF TRANSMISSION PATHS PER TRUNK GROUP	MEASURED BLOCKING THRESHOLDS IN THE TIME CONSISTENT BUSY HOUR FOR THE NUMBER OF MEASUREMENTS PER TRUNK GROUP			
	15-20 MEASURE-MENTS	11-14 MEASURE-MENTS	7-10 MEASURE-MENTS	3-6 MEASURE-MENTS
2	.045	.055	.060	.095
3	.035	.040	.045	.060
4	.035	.040	.045	.055
5-6	.025	.035	.040	.045
7 or more	.020	.025	.030	.040

6. SWITCHED ACCESS SERVICE

6.5 OBLIGATIONS OF THE COMPANY (Cont'd)

6.5.10 END USER LINE AND USAGE INFORMATION DATA

A. General

The Company will provide to customers, upon request, historical and projected information pertaining to the number of end user lines and average use per line. Such historical and projected information shall be limited to that information which the Company uses in the course of performing its normal business operations. Additionally, the Company will make updated information available on a semi-annual basis.

B. Information Content and Format

The historical and projected data will be provided on a per end office basis and will consist of the following information:

- Number of residential lines
- Number of business lines
- Average use per line

Unless otherwise requested, the data will be provided in machine-readable format.

C. Availability of Data

The Company will update the data semi-annually and provide the data to the requesting IC within 30 days of the receipt of the request.

D. Charges for Data

The charge to the customer for such data will be developed on an individual case basis and will include only those incremental costs incurred by the Company in responding to the individual data request. Incremental costs include, but are not limited to, costs associated with the provision of data in a non-standard format as well as costs associated with responding to other individualized treatment requested by the customer.

6. SWITCHED ACCESS SERVICE

6.6 OBLIGATIONS OF THE CUSTOMER

In addition to the obligations of the customer set forth in Section 2, preceding, the customer has certain specific obligations pertaining to the use of Switched Access Service. These obligations are as follows:

6.6.1 ORDERING REQUIREMENTS

When ordering Switched Access Service, the customer shall specify on the order for service, the type and number of Entrance Facilities to terminate at the customer's SWC, the desired interoffice transport, direct or tandem routing, the number of lines and/or trunks to be provisioned at an end office or access tandem and the desired directionality. (T-x) (T-x)

6.6.2 REPORT REQUIREMENTS (M-x)

Customers are responsible for providing the following reports to the Company, when applicable.

A. Jurisdictional Reports

When a customer orders Switched Access Service for both interstate and intrastate use, the customer is responsible for providing reports as set forth in 2.3.10, preceding. Charges will be apportioned in accordance with those reports. The method to be used for determining the interstate charges is set forth in 2.3.12, preceding. (M-x)

Certain material on this page formerly appeared on Page 6-169.

(x) Issued under Authority of Special Permission No. 00-008 to reinstate currently effective material.

6. SWITCHED ACCESS SERVICE

6.6 OBLIGATIONS OF THE CUSTOMER
6.6.2 REPORT REQUIREMENTS (Cont'd)

B. Code Screening Reports

When a customer orders Service Class Routing or trunk access limitation arrangements, it must report the number of trunks and/or the appropriate codes to be instituted in each end office or access tandem switch, for each of the arrangements ordered.

C. 900 NXX Code Reports

When ordering 900 Access Service, the customer must report the appropriate NXX code(s) to be instituted in each Company office at which the customer identification function is performed. The report must be updated by the customer each time a change is scheduled to occur (i.e., when a new code is to be added or an existing code is to be deleted). Such updated reports shall be provided at least 60 calendar days prior to the effective date of the change in order to allow the Company sufficient time to implement the change.

D. Multiple POTs Tandem Sectorization Reports

When ordering MPTS the customer must report the customer designated POT for all subtending end offices served by an access tandem. The report shall be provided at the same time the Access Order is placed.

E. 500 NXX Code Reports

When ordering 500 Access Service, the customer must report the appropriate NXX code(s) to be instituted in each required point of six-digit translation at which the carrier identification function is performed. The report must be updated by the customer each time a change is scheduled to occur (i.e., when a new NXX code is to be added or an existing NXX code is to be deleted). Such updated reports shall be provided at least 45 calendar days prior to the effective date of the change in order to allow the Company sufficient time to implement the change.

Certain material previously found on this page can now be found on Page 6-168.

(x) Issued under Authority of Special Permission No. 00-008 to reinstate currently effective material.

6. SWITCHED ACCESS SERVICE

6.6 OBLIGATIONS OF THE CUSTOMER (Cont'd) (T-x) (D-x)

6.6.3 SUPERVISORY SIGNALING

The customer's facilities shall provide the necessary off-hook and on-hook answer and disconnect supervision.

6.6.4 TRUNK GROUP MEASUREMENTS REPORTS

With the agreement of the customer, trunk group data in the form of usage in hundred call seconds (CCS), peg count and overflow for its end of all access trunk groups, where technologically feasible, will be made available to the Company. These data will be used to monitor trunk group utilization and service performance and will be based on previously arranged intervals and format.

6.6.5 DESIGN OF SWITCHED ACCESS SERVICES

When a customer orders Switched Access Service on a per-facility and/or per-trunk basis, it is the customer's responsibility to assure that sufficient access services have been ordered to handle its traffic.

Certain material previously found on this page can now be found on Page 6-169.

(x) Issued under Authority of Special Permission No. 00-008 to reinstate currently effective material.

6. SWITCHED ACCESS SERVICE

6.7 RATE REGULATIONS

This section contains the specific regulations governing the rates and charges that apply for Switched Access Service.

6.7.1 DESCRIPTION AND APPLICATION OF RATES AND CHARGES

There are three types of rates and charges that apply to Switched Access Service. These are monthly recurring rates, usage rates and nonrecurring charges. These rates and charges are applied differently to the various rate elements as set forth in C. and D., following.

A. Monthly Rates

Monthly rates are flat recurring rates that apply each month or fraction thereof that a specific rate element is provided. For billing purposes, each month is considered to have 30 days.

B. Usage Rates

Usage rates are rates that apply only when a specific rate element is used. These are applied on a per-access minute, a per-call or per-query basis. Usage rates are accumulated over a monthly period.

C. Nonrecurring Charges

Nonrecurring charges are one-time charges that apply for specific work activity (i.e., installation or change to an existing service). The types of nonrecurring charges that apply for Switched Access Service are: installation of service, installation of optional features or BSEs and service rearrangements. These charges are set forth in 6.8, following.

6. SWITCHED ACCESS SERVICE

6.7 RATE REGULATIONS
6.7.1 DESCRIPTION AND APPLICATION OF RATES AND CHARGES

C. Nonrecurring Charges (Cont'd)

1. Installation of Service

Nonrecurring charges apply for the installation of the Entrance Facility and for the installation of the individual Feature Group or BSA line or trunk.

a. An Entrance Facility nonrecurring charge is assessed per point of termination (i.e., Voice Grade, DS1 or DS3), per customer designated premises, per Access (T-x)
Order for every new Entrance Facility installed. When the EF is existing, and (T-x)
the customer orders additional Switched Access services to connect to the existing EF, nonrecurring charges will not apply for the EF.

b. For Switched Access Service which is ordered on a per-line or -trunk basis for the Feature Group or BSA, the nonrecurring charge is applied per line or per trunk. Nonrecurring charges are assessed dependent on the Interface Group ordered for terminating Switched Transport at the customer's point of termination. Each Interface Group provides a specified premises interface as set forth in 6.1.2, preceding. Each Interface Group (i.e., 1, 2, 6, 9) is assigned to an Interface Group Category for the application of nonrecurring charges based on the "first" and "each additional" line or trunk application per Access Order. If a (T-x)
customer orders multiple lines or trunks on the same Access Order, the first line (T-x)
or trunk is assessed the "first" installation charge and each additional line or trunk is assessed the "each additional" installation charge per Interface Group Category (i.e.,1 and 2, 6 or 9), per Access Order. The per-line or per-trunk (T-x)
nonrecurring charge is in addition to the Entrance Facility charge, if applicable.

c. Nonrecurring charges for FGB, FGD, CST1 or CST3 Switched Access Service include one Carrier Identification Code (CIC) on an initial Access Order. The (T-x)
CIC is a uniform numeric code that identifies the customer associated with the Switched Access Service. The customer of the initial CIC is the customer of record for the Switched Access Service. When a customer requests two or more CICs on an initial Access Order, each additional CIC (i.e., two or more) is (T-x)
considered to be a service rearrangement as set forth in l., following. (T-x)

(x) Issued under Authority of Special Permission No. 00-008 to reinstate currently effective material.

6. SWITCHED ACCESS SERVICE

6.7 RATE REGULATIONS

6.7.1 DESCRIPTION AND APPLICATION OF RATES AND CHARGES

C. Nonrecurring Charges (Cont'd)

2. Installation of Optional Features and BSEs

   Nonrecurring charges apply for the installation of some of the optional features and BSEs available with Switched Access Service. The charges may apply whether the feature is installed coincident with the initial installation of service or at any time subsequent to the initial installation of service. In addition, a BSE Access Service Order charge may apply when a BSE is ordered subsequent to the initial installation of service. Specific rate applications are as set forth in 6.7.1, following.

3. Service Rearrangements

   Service rearrangements are changes to existing services installed which do not result in either a change in the minimum period requirements as set forth in 5.2.5, preceding, or a change in the physical location of the point of termination at a customer's premises or a customer's end user's premises. Changes which result in the establishment of new minimum period obligations are treated as disconnects and starts. Changes in the physical location of the point of termination are treated as moves and are described and charged for as set forth in 6.7.6, following. (C)

6. SWITCHED ACCESS SERVICE

6.7 RATE REGULATIONS
6.7.1 DESCRIPTION AND APPLICATION OF RATES AND CHARGES

C.3. (Cont'd)

The charge to the customer for the service rearrangement is dependent on whether the change is administrative only in nature or involves an actual technical and/or physical change to the service.

Administrative changes will be made without charge(s) to the customer. Administrative changes are as follows:

6

- Change of customer name (i.e., the customer of record does not change but rather the customer of record changes its name - e.g., XYZ Telephone Company to XYZ Communications)
- Change of customer name as the result of a transfer of use of services as set forth in 2.1.2, preceding
- Change of customer or customer's end users premises address when the change of address is not a result of a physical relocation of equipment
- Change in billing data (name, address, or contact name or telephone number)
- Change of agency authorization
- Change of customer circuit identification
- Change of billing account number
- Change of customer test line number
- Change of customer or customer's end users contact name or telephone number
- Change of jurisdiction

6. SWITCHED ACCESS SERVICE

6.7 RATE REGULATIONS
6.7.1 DESCRIPTION AND APPLICATION OF RATES AND CHARGES

C.3. (Cont'd)

All other service rearrangements will be charged as set forth following:

a. If the change involves the addition of or a modification to an optional feature which has a separate nonrecurring charge, that nonrecurring charge will apply.

b. If the change involves the addition of or a modification to a BSE which has a separate nonrecurring charge, that nonrecurring charge will apply. In addition, a BSE Access Service Order charge, per order, will apply when a BSE is ordered on a subsequent basis without line or trunk activity on the same order, except as set forth in 6.7.1.L.5., following. The BSE Access Service Order charge will not apply when a BSE and an optional feature are ordered on the same order.

(D)

(D)

6. SWITCHED ACCESS SERVICE

6.7 RATE REGULATIONS
6.7.1 DESCRIPTION AND APPLICATION OF RATES AND CHARGES

C.3. (Cont'd)

c. If, due to technical limitations of the Company, a customer could not combine its 500 Access Service, 800 DB Access Service and/or 900 Access Service traffic with its other Trunkside Switched Access Services, no charge shall apply to combine these trunk groups when it becomes technically possible. (T)

d. If, due to an office replacement, a customer requests conversion from one-way to two-way trunks, and the request is made six months in advance of the office replacement due date, the nonrecurring charges will not apply. (T)

e. For all other changes, including the addition of, or modifications to optional features without separate nonrecurring charges, a charge equal to one-half the Switched Transport per-line or per-trunk nonrecurring (i.e., installation) charge will apply. This one-half nonrecurring charge is assessed the "first" installation charge for the first line or trunk and each additional line or trunk is assessed the "each additional" installation charge per appropriate Interface Group category, per Access Order. If two or more optional features and changes are ordered on the same Access Order, the optional feature or change requiring the lowest level of work activity will apply. A maximum one-half nonrecurring charge will apply per Access Order for service rearrangements. If a feature is not required on each line or trunk, but rather for an entire hunt or trunk group, end office or access tandem switch, only one such charge will apply (i.e., it will not apply per line or trunk). This one-half nonrecurring charge is assessed the "first" installation charge for the first hunt group, trunk group, end office or access tandem switch and each additional hunt group, trunk group, end office or access tandem switch is assessed the "each additional" installation charge per appropriate Interface Group category, per Access Order. Service Rearrangement terms and conditions associated with WATS service optional features, additions and changes are set forth in f., following. Nonrecurring charges for service rearrangements are specified in 6.8, following. (T) (T)

6. SWITCHED ACCESS SERVICE

6.7 RATE REGULATIONS
6.7.1 DESCRIPTION AND APPLICATION OF RATES AND CHARGES

C.3. (Cont'd)

f. For optional features, additions and changes associated with WATS service, the one-half nonrecurring charge is assessed the "first" installation charge for the first line or trunk and each additional line or trunk is assessed the "each additional" installation charge for Interface Group 6, per Access Order. This charge applies for all Network Channel Interface (NCI) codes associated with a WATS access line. If two or more optional features and changes are ordered on the same Access Order, the optional feature or change requiring the lowest level of work activity will apply. A maximum one-half nonrecurring charge will apply per Access Order for service rearrangements. If a feature is not required on each line but rather for an entire hunt group, only one such charge will apply (i.e., it will not apply per line). This one-half nonrecurring charge is assessed the "first" installation charge for the first hunt group and each additional hunt group is assessed the "each additional" installation charge per Interface Group 6, per Access Order. Nonrecurring charges for service rearrangements are specified in 6.8, following. (T)

(D)

(D)

g. Service rearrangement charges apply when the customer rearranges 500 Access Service from direct end office routing to tandem routing or tandem routing to direct end office routing. These service rearrangement charges, as set forth in e., preceding, apply even if the customer requests a rearrangement due to the Company performing the screening and routing function at a different location. (T) (T)

6. SWITCHED ACCESS SERVICE

6.7 RATE REGULATIONS
6.7.1 DESCRIPTION AND APPLICATION OF RATES AND CHARGES

C.3. (Cont'd)

h. Service rearrangement charges are applicable, as set forth in e., preceding, when Alternate Traffic Routing, as described in 6.3.1, preceding, is added, changed or removed from an existing trunk group. Service rearrangement charges are not applicable when the following Alternate Traffic Routing changes are requested: (T)

- renaming a high usage group to be an intermediate high usage group and the delivery of the originating traffic (i.e., the overflowing traffic) is not changing,
- renaming an intermediate high usage group to be a high usage group and the delivery of the originating traffic (i.e., the overflowing traffic) is not changing, or
- renaming a trunk group (i.e., a direct final) to be an alternate final trunk group.

i. A request to change CST3 or FGD Service from a direct route or a tandem route (T)
to a direct route equipped with TSI (where the Company Equal Access End (T)
Office subtends a customer-provided tandem) is a discontinuance of the existing service and an installation of a new service. All associated nonrecurring charges apply for the new service. Minimum period requirements for Switched Access Service apply as set forth in 5.2.5, preceding.

6. SWITCHED ACCESS SERVICE

6.7 RATE REGULATIONS
6.7.1 DESCRIPTION AND APPLICATION OF RATES AND CHARGES

C.3. (Cont'd)

j. Nonrecurring charges for additional (i.e., two or more) CICs are determined based on whether the FGB, FGD, CST1 or CST3 trunk(s) or trunk group(s) are new or existing, the Interface Group Category rate and the level of work activity (i.e, trunk, trunk group, end office and/or tandem). (T-x)

When the trunk or trunk group is new, one CIC is included in the nonrecurring charges for the initial Access Order. Each additional CIC requested on the same Access Order is assessed one-half the "each additional" installation charge assessed by Interface Group Category. In addition, the charge is based on the lowest level of work, per Access Order, per LATA. The additional (i.e., two or more) CIC service rearrangement charge is in addition to Installation Charge(s) for the trunk(s).

When the FGB, FGD, CST1 or CST3 trunk group is existing service and the customer is requesting additional CICs on an existing tandem-routed trunk group, the customer is charged one-half the "first" installation charge at the tandem and one-half the "each additional" installation charge at each subtending end office for the "first additional" CIC on the Access Order, assessed by Interface Group Category. Each "additional" CIC after the "first additional" CIC on the same Access Order is charged one-half the "each additional" installation charge at the tandem and one-half the "each additional" installation charge per subtending end office, per LATA, based on the Interface Group Category.

When the FGB, FGD, CST1 or CST3 trunk group is existing service and the customer is requesting additional CICs on a direct-routed trunk group, the customer is charged one-half the "first" installation charge for the "first additional" CIC and one-half the "each additional" installation charge for each "additional" CIC after the "first additional" CIC on the same Access Order, per end office, per LATA, based on the Interface Group Category. (T-x)

(x) Issued under Authority of Special Permission No. 00-008 to reinstate currently effective material.

6. SWITCHED ACCESS SERVICE

6.7 RATE REGULATIONS
6.7.1 DESCRIPTION AND APPLICATION OF RATES AND CHARGES

C.3.j. (Cont'd)

When the FGB, FGD, CST1 or CST3 trunk or trunk group is new or existing and the customer is requesting CICs for both a direct and tandem route, the Company will exclude the direct-routed end offices from the end office count when calculating the tandem-routed trunk group service rearrangement charges when the following conditions are met: 1) the CICs requested are the same on each order, 2) the Access Orders are received at the same time 3) the Access Orders are due on the same date and 4) the LATA is the same. (T-x) (T-x)

k. Service rearrangement charges are applicable, as set forth in e., preceding when the customer has Signaling System Seven (SS7) Out of Band Signaling and chooses to change the existing point code on the existing trunk(s). If the point code in the STP is changed for the associated CCSAC link(s), a CCSAC Option Activation charge, as set forth in 20.1.3, following, also applies.

(x) Issued under Authority of Special Permission No. 00-008 to reinstate currently effective material.

6. SWITCHED ACCESS SERVICE

6.7 RATE REGULATIONS
6.7.1 DESCRIPTION AND APPLICATION OF RATES AND CHARGES

C. Nonrecurring Charges (Cont'd)

4. Conversion of Existing Feature Groups to Unbundled BSAs

Nonrecurring charges will not apply to convert existing Feature Groups to unbundled BSA equivalents if the change is administrative in nature. If the customer requests a change in the technical characteristics of the existing Feature Group service, nonrecurring charges will apply as set forth in 1., 2. and 3., preceding.

5. Rearrangement to SS7 Out of Band Signaling (C)

Rearrangement of existing CST3 or FGD Multifrequency (MF) signaling or (C)
upgrades in Lineside or Trunkside Switched Access Service to CST3 or FGD
trunk groups equipped with SS7 out of band signaling will be performed at (C)
Company tandems and end offices designated as having SS7 capabilities. SS7 (T)
Out of Band Signaling Rearrangement Charges will apply when the following (T)
conditions are met:

- The same customer premises, quantity of lines or trunks, routing, traffic type, (C)
  Interface Group category, optional features and/or BSEs are maintained.
  Exceptions to this condition are set forth in 6.7.1.K., 6.7.1.O. and 6.7.5, (C)
  following.

- Rearrangement from a one-way or two-way transmission when the signaling is (C)
  changing to SS7 out of band signaling will be by trunk group(s) ordered and
  received at the same time. (C)

- Multiple lines or trunk groups may be combined into a single CST3 or FGD (C)
  trunk group with SS7 out of band signaling when all trunks within the group (T)
  are traffic engineered as a unit and all the communications paths within the
  group are interchangeable.

- The disconnect date and connect date on the Access Orders must be the same (T)
  date when rearranging to a CST3 or FGD trunk group with SS7 out of band (C)
  signaling. Exceptions to this condition are set forth in 6.7.5.A., following. (C)

- Upgrades from Lineside or Trunkside service types to FGD Switched Access (N)
  Service with SS7 out of band signaling are available when the above conditions
  and conditions in 6.7.5, following are met. (N)

6. SWITCHED ACCESS SERVICE

6.7 RATE REGULATIONS
6.7.1 DESCRIPTION AND APPLICATION OF RATES AND CHARGES

C.5. (Cont'd)

When Switched Access Service is rearranged to CST 3 or FGD with SS7 out of band signaling, the customer will be charged a Service Order Rearrangement charge and Trunk Rearrangement charges. The Service Order Rearrangement charge is assessed per access order, per Interface Group. The SS7 Trunk Rearrangement charge is applied per trunk in each SS7 out of band signaling trunk group. The first trunk in the SS7 out of band signaling trunk group will be charged the "first trunk" charge and each additional trunk in the same group will be charged the "each additional" trunk charge. Service Order and Trunk Rearrangement charges are sensitive to whether the transmission (one-way or two-way) is changing. These charges are set forth in 6.8., following. (T)

The description and application of rates and charges when rearranging Switched Data Service or CST3 or FGD service to SS7 out of band signaling and Clear Channel Capability are set forth in 6.7.1.K. and 6.7.1.O., following.

6. SWITCHED ACCESS SERVICE

6.7 RATE REGULATIONS
6.7.1 DESCRIPTION AND APPLICATION OF RATES AND CHARGES

C. Nonrecurring Charges (Cont'd)

6. Rearrangement of CST1, FGB, CST3, or FGD Trunks from a Company Access Tandem Route to a Direct Route.

When the customer requests the rearrangement of existing CST1, FGB, CST3 or FGD trunks (excludes 500 Access Service) from a Company access tandem route to an end office direct route without the TSI option, charges are determined as set forth following. (T)

When the customer has the DTT rating option between the SWC of the customer's premises and the access tandem and is requesting DTT to an end office (see exception described in 8., following), a rearrangement charge, as set forth in 6.8.1.D.5., following, is assessed if the following conditions are met. If the conditions are not met, nonrecurring charges as described in 1., 2., or 3., preceding, may apply as determined by the customer's access service request. (T)

- The rearrangement charge is assessed in association with the Interface Group, 1, 2, 6 or 9, and is applied per trunk in each direct routed access trunk group. The first trunk in the direct routed access trunk group is charged the "first trunk" charge and each additional trunk is charged the "each additional" trunk charge.

- The same customer premises, service type and Interface Group category are maintained with the exception of a change in Interface Group category and service type as set forth in 6.7.4 and 6.7.5, following. If the quantity of trunks changing to direct routed access exceeds the number of trunks disconnecting from the Company access tandem, full nonrecurring installation charges will apply for the additional trunks.

- Customers may specify a change in traffic type and direction (i.e., one-way to two-way) at the time the order is received.

6. SWITCHED ACCESS SERVICE

6.7 RATE REGULATIONS

6.7.1 DESCRIPTION AND APPLICATION OF RATES AND CHARGES

C.6. (Cont'd) (T)

- Customers may specify a change in optional features (except Switched Transport multiplexing) and/or BSEs at the time the order is received. If the optional feature and/or BSE has a separate nonrecurring charge, that nonrecurring charge will apply in addition to the rearrangement charge. Requests for a rearrangement from MF to SS7 out of band signaling must be received on a separate access order.

- All trunks will be rearranged into 24 trunks within a direct routed access trunk group.

- The order to disconnect the tandem route and to connect the end office DTT shall be placed at the same time. The disconnect date of the tandem route order may be negotiated with the Company not to exceed 30 days from the connect date of the end office DTT order with the exception of a change in service type as set forth in 6.7.5, following.

- Customer specified rearrangement requests will be cooperatively negotiated with the customer and are subject to the availability of Company switching equipment and other existing facilities.

(D)

(D)

6. SWITCHED ACCESS SERVICE

6.7 RATE REGULATIONS

6.7.1 DESCRIPTION AND APPLICATION OF RATES AND CHARGES (T)

C. (Cont'd)

(D)

(D)

7. Reserved for Future Use

6. SWITCHED ACCESS SERVICE

6.7 RATE REGULATIONS
6.7.1 DESCRIPTION AND APPLICATION OF RATES AND CHARGES

C.7. (Cont'd)

(D)

6. SWITCHED ACCESS SERVICE

6.7 RATE REGULATIONS

6.7.1 DESCRIPTION AND APPLICATION OF RATES AND CHARGES

C. Nonrecurring Charges (Cont'd)

8. Rearrangement of 800 DB Access Service from Tandem Routing to Direct Routing (T)

When the customer requests the rearrangement of 800 DB Access Service from tandem routing to direct routing, no charge shall apply for the customer requested rearrangement as long as the following conditions are met: (T)

- The same customer premises, service type and Interface Group category are maintained with the exception of a change in Interface Group category and service type as set forth in 6.7.4 and 6.7.5, following.

- The end office must subtend the tandem which service is being rearranged from.

- The customer must disconnect one trunk at the tandem for each rerouted end office trunk installed. Trunk rearrangements for more than one-for-one must be determined on an equivalent basis substantiated by industry accepted engineering standards and mutually agreed upon by the Company and the customer. (T)

- The customer may specify a change in traffic type and direction (i.e., one-way to two-way) at the time the order is received.

- The customer may specify a change in optional features (except Switched Transport multiplexing) and/or BSEs at the time the order is received. If the optional feature and/or BSE has a separate nonrecurring charge, that nonrecurring charge shall apply. Requests for a rearrangement from MF to SS7 out of band signaling must be received on a separate access order.

- The Company must receive an ASR to connect 800 DB Access Service at the end office within six months of the end office becoming SSP capable. The customer must place the order to disconnect from the tandem at the same time the order is placed to connect at the end office. The disconnect date may be negotiated with the Company not to exceed 90 days from the connect date. (T) (T)

- Customer specified rearrangement requests will be cooperatively negotiated with the customer and are subject to the availability of Company switching equipment and other existing facilities. (T)

6. SWITCHED ACCESS SERVICE

6.7 RATE REGULATIONS
6.7.1 DESCRIPTION AND APPLICATION OF RATES AND CHARGES

C. Nonrecurring Charges (Cont'd)

9. Rollover

When a customer meets the rollover conditions , as set forth in (a), following, and is rearranging their facilities, as set forth in (b), following, a rollover charge shall apply to the lower speed facility as specified in 6.8, following. When the requested change does not meet the rollover conditions, then the appropriate nonrecurring charge applies as set forth in this section. (T)

(a) Rollover Conditions

- The EF and/or DTT facilities are provided between the same customer locations as the original facilities, and
- all rollovers are performed at the same Company central office location, and
- all facilities involved in the rollover are provided by the Company.

(b) Rollover Service Rearrangements

- A lower speed Entrance Facility or DTT facility is to be placed on a higher speed facility, or
- moved from one higher speed facility to a different higher speed facility, or
- moved to a different channel on the same multiplexed facility.

If an order is required to rearrange the lines and/or trunks associated with a facility rollover, service rearrangement charges (e.g., Switched Transport per-line or per-trunk nonrecurring charges) may apply as set forth in (C) (3), preceding in addition to the facility rollover charges.

If an order is required to change the interface group category on the lines and/or trunks associated with a facility rollover, then the terms and conditions as set forth in 6.7.4, following, apply in addition to the facility rollover charge.

If an order is required to change the Switched Access Service type on the lines and/or trunks associated with a facility rollover, then the terms and conditions as set forth in 6.7.5, following, apply in addition to the facility rollover charge. (T)

6. SWITCHED ACCESS SERVICE

6.7 RATE REGULATIONS
6.7.1 DESCRIPTION AND APPLICATION OF RATES AND CHARGES (Cont'd)

D. Application of Premium and Transitional Rates

The specific application of premium and transitional rates for a specific customer is dependent upon the type of service and the availability of equal access capabilities in the end office to which the service is provided.

The following rules, 1. through 4., provide the basis for applying the premium and transitional usage rates for Local Switching, Information Surcharge, and Carrier Common Line. (C)

1. Premium rates apply to all CST2, CST3, FGC and FGD access minutes, to all CSL, FGA, CST1, FGB and *DID* access minutes that originate from or terminate at end offices equipped with equal access capabilities and to all access minutes that originate or terminate at end offices not equipped with equal access capabilities when the service is provided to customers who furnish interstate MTS/WATS.

   When originating CST3 or FGD is not available in an end office, and terminating CST3 or FGD service to an access tandem in a LATA is available, such terminating CST3 or FGD service may be used, at the option of the customer, to terminate CST3 or FGD calls to that end office. Premium CST3 or FGD rates apply to all access minutes associated with such calls.

   BSE premium and transitional rate applications are described in 6., following.

2. Transitional rates (i.e., discounted access minute rates) apply to all CSL, CST1, FGA, FGB or *DID* access minutes (measured or assumed) that originate from or terminate at end offices not equipped with equal access capabilities and to all access minutes that originate at end offices not equipped with equal access capabilities when service is converted at the SSP switch to standard CST3 or Feature Group D format for the provision of 800 DB Access Service.

6. SWITCHED ACCESS SERVICE

6.7 RATE REGULATIONS
6.7.1 DESCRIPTION AND APPLICATION OF RATES AND CHARGES

D. Application of Premium and Transitional Rates

3. When CSL, CST1, FGA, FGB or *DID* Switched Access Service provided to an entry switch (i.e., dial tone office for CSL and FGA and access tandem for CST1 and FGB) has usage originating from and/or terminating at both end offices that have been converted to equal access and end offices that have not been converted, the premium and transitional rates will apply in the following manner:

a. All access minutes that originate from or terminate at the equal access end office(s) will be billed at premium rates. Access minutes that originate from or terminate at end offices not equipped with equal access capabilities, hereinafter referred to as non-premium access minutes, will continue to be billed at transitional rates. Transitional rates will apply as follows:

(1) The number of non-premium access minutes to be billed at transitional rates is derived by subtracting the number of premium-rated access minutes from the total number of access minutes.

(2) Premium access minutes will be determined as set forth in b. following.

b. The number of access minutes to be rated as premium access minutes is determined as follows:

(1) Where measurement capability exists, and end office specific usage data is available, premium rates will apply to all access minutes originating from or terminating at equal access end offices.

(2) Where measurement capability does not exist and/or end office specific usage data is not available, originating and/or terminating usage will be apportioned between premium and non-premium usage as described following. The usage to be apportioned will be the recorded usage or the assumed usage as set forth in 3.c., and 6.7.7, following. Such apportionment will be based on the ratio of the number of subscriber lines in the access area (i.e., local calling area, LATA or end offices subtending the access tandem, as appropriate) of the entry switch that are served by equal access end offices to the total number of subscriber lines in that access area. The ratio thus developed is applied to the total measured or assumed originating CSL, FGA and *DID* usage, terminating CSL and FGA usage, originating CST1 and FGB usage or terminating CST1, FGB usage, as applicable, to determine the usage to be billed at premium rates, unless adjusted as set forth in (3), following.

6. SWITCHED ACCESS SERVICE

6.7 RATE REGULATIONS
6.7.1 DESCRIPTION AND APPLICATION OF RATES AND CHARGES

D.3.b.(2) (Cont'd)

The ratios used to determine the premium usage will be updated on a quarterly basis. The ratios to be used for the succeeding quarter will be provided to the customer with the last bill rendered in the quarter or mailed separately within five working days after the first day of the new quarter (i.e., January, April, July and October).

For purposes of administering this provision: (1) subscriber lines are defined as exchange service lines, Centrex lines and Centrex-type lines provided by the Telephone Company under its local and/or general exchange service tariff; (2) the access area is defined as the local calling area of the dial tone or entry switch office for originating CSL, FGA or *DID* respectively, the entire LATA for terminating CSL or FGA, and all end offices subtending the access tandem for originating and terminating CST1 or FGB; and (3) the local calling area of the dial tone office is as defined in the Company's local and/or general exchange service tariff.

The Company will provide to the customer, upon request and free of charge, the underlying data used to derive the subscriber line ratio described above. This information and any other information necessary to verify a customer's bill will be provided to the customer within 30 days of the Telephone Company receiving a request from the customer.

(3) Where CST3 or FGD Switched Access Service is provided to a customer in an end office(s) where CSL, CST1, FGA or FGB premium access minutes have been determined in accordance with (2), preceding, such premium access minutes will be adjusted in the following manner. For each CST3 or FGD access minute originating from or terminating at that end office, except those minutes of use identified as *SWITCHNET 56* minutes of use, the originating or terminating CSL, CST1, FGA or FGB premium access minutes determined as set forth in (2), preceding, will be reduced on a one-for-one basis, but in no event shall the reduction exceed the total number of CSL, CST1, FGA or FGB premium access minutes originating from or terminating at that end office. The customer will be billed for the revised number of premium access minutes.

6. SWITCHED ACCESS SERVICE

6.7 RATE REGULATIONS
6.7.1 DESCRIPTION AND APPLICATION OF RATES AND CHARGES

D.3. (Cont'd)

c. Where originating and/or terminating recording capability does not exist for CSL, CST1, FGA, FGB or *DID* provided to an entry switch, the number of access minutes will be assumed as set forth in 6.7.7, following.

The Telephone Company will provide written notification to all access customers of record within a particular LATA that an end office in that LATA is scheduled to be converted to an equal access end office. This notification will be sent, via certified U.S. Mail, to each customer of record in the LATA where the conversion is scheduled to occur, at least six months in advance of the conversion date.

The customer will have the choice of converting existing services to equal access (i.e., originating and terminating CST3 or Feature Group D) at no charge, pursuant to the conditions set forth in 6.7.5, following, or retaining the existing services. Premium rates will apply to all access minutes beginning on the actual conversion date of an end office.

4. Where Switched Access Service is provided to a carrier in conjunction with a Commercial Mobile Radio Service provider, the Company shall apply the premium and transitional rates as set forth in 2.4.8, preceding. (T)

6. SWITCHED ACCESS SERVICE

6.7 RATE REGULATIONS
6.7.1 DESCRIPTION AND APPLICATION OF RATES AND CHARGES

D. Application of Premium and Transitional Rates (Cont'd)

5. BSE Recurring Rates

The recurring rates for BSEs are applied on a premium or transitional basis. The specific application of these premium and transitional rates is dependent upon the serving arrangement and the availability of equal access capability in the end office where the serving arrangement is provided.

The following rules provide the basis for applying premium and transitional BSE rates.

- Transitional rates apply to all BSEs provided at end offices or access tandems not equipped with equal access capabilities.

- Premium rates apply to all BSEs provided at end offices or access tandems equipped with equal access capabilities and to all BSEs provided to customers who furnish interstate MTS/WATS.

The transitional rates will be calculated by multiplying the premium rates (set forth in 6.8, following) by .45 and rounding to the number of decimal points displayed in the rate.

E. Reserved for future use.

6. SWITCHED ACCESS SERVICE

6.7 RATE REGULATIONS
6.7.1 DESCRIPTION AND APPLICATION OF RATES AND CHARGES (Cont'd)

F. 800 DB Access Service

An 800 Carrier Identification Charge is assessed per call to the service provider the call is delivered to in accordance with SMS/800 information residing in the Company's SCP.

A POTS Translation Charge is assessed per call, in addition to the 800 Carrier Identification Charge, when the POTS number is delivered to the service provider instead of the 8XX number in accordance with SMS/800 information residing in the Company's SCP. The POTS Translation feature is described in 6.2.8, preceding.

A Call Handling and Destination Feature Charge is assessed to the service provider the call is intended for on a per-query basis for each 8XX query to the Company's SCP that utilizes a Call Handling and Destination feature as described in 6.2.8, preceding. The query rate is assessed for all completed queries whether or not the actual 8XX call is delivered to the service provider. A query is considered to be completed when the routing information is delivered back to the Service Switching Point. (T) | (T)

The rates and charges are in addition to the rates and charges for the rate categories described in 6.1.2, preceding, which are applicable to all Switched Access Service. The 800 DB Access Service rates are set forth in 6.8.9, following.

6. SWITCHED ACCESS SERVICE

6.7 RATE REGULATIONS
6.7.1 DESCRIPTION AND APPLICATION OF RATES AND CHARGES (Cont'd)

G. 900 Access Service Customer Identification Charge

A 900 Access Service Customer Identification Charge is assessed for each 900 call delivered to the customer. This charge is in addition to the rates and charges for the rate categories described in 6.1.2, preceding, which are applicable to all Switched Access Services. The per-call rate is set forth in 6.8, following.

H. 900 Access Service Nonrecurring Charge

In addition to the rates and charges for the rate categories described in 6.1.2, preceding, which are applicable to all Switched Access Services, the following charges apply to 900 Access Service:

1. There are two additional charges which apply to 1+900 Service to activate the 900 NXX code(s) for each end office. These charges are assessed on a first and subsequent NXX per access order, per screening location. The screening location, end office or tandem, is determined by where the six-digit translation of the 900 NXX portion of the dialed number is performed. These charges are set forth in 6.8, following.

2. There are two additional charges which apply to expanded 0+900 Service to activate the Expanded 900 Option. These charges are assessed per access order, per screening location, end office or tandem with NXX activity or can be ordered without NXX activity. The Expanded 900 Option is not offered without 1+900 Access Service within a LATA and is available only with CST3 or Feature Group D Service in suitably equipped Telephone Company end offices. These charges are set forth in 6.8, following.

6. SWITCHED ACCESS SERVICE

6.7 RATE REGULATIONS
6.7.1 DESCRIPTION AND APPLICATION OF RATES AND CHARGES (Cont'd)

I. Multiple POTs Tandem Sectorization [1] Nonrecurring Charge (C)

The nonrecurring charges for MPTS are described as follows.

The MPTS ASR charge applies when a customer is ordering MPTS without associated trunk activity on the same order. This charge applies whether the order is to initially add sectors, or make rearrangements to an existing sector(s). Trunk activity includes installing new trunks, adding additional trunks, rearranging existing trunks or removing trunks. This charge is in addition to the MPTS establishment charge (without associated trunk activity) and the MPTS rearrangement charge (without associated trunk activity).

The MPTS establishment charge (without associated trunk activity) applies when a customer orders MPTS Service without associated trunk activity on the same order. The MPTS establishment charge (with associated trunk activity) applies when a customer orders MPTS Service with associated trunk activity on the same order.

The MPTS rearrangement charge (without associated trunk activity) applies when a customer orders rearrangements to established MPTS service without associated trunk activity on the same order. The MPTS rearrangement charge (with associated trunk activity) applies when a customer orders rearrangements to established MPTS service with associated trunk activity on the same order. These charges are set forth on 6.8, following.

[1] Effective February 20, 1999, MPTS is limited to existing customers on existing MPTS trunk groups only. Customers with MPTS in service may augment existing MPTS trunk groups until the service is moved or disconnected. If the service is moved or disconnected, MPTS may not be reestablished. (C)

6. SWITCHED ACCESS SERVICE

6.7 RATE REGULATIONS
6.7.1 DESCRIPTION AND APPLICATION OF RATES AND CHARGES (Cont'd)

J. Self Healing Alternate Route Protection (SHARP)

The charges for SHARP are described as follows:

When the SHARP optional feature is ordered and installed coincident with the initial installation of the associated Switched Access Service, no nonrecurring charges apply for the SHARP option.

The SHARP installation charge applies when a customer orders SHARP subsequent to the initial installation of the associated Switched Access trunks. These charges are assessed per Interface Groups 6 and/or 9, per access order. The customer is assessed the "first" installation charge for the first trunk and each additional trunk is assessed the "each additional" installation charge for every trunk ordered with the SHARP option. These rates are as set forth in 6.8.1.E., following.

The removal of the SHARP optional feature will be treated as a discontinuance of the existing service and installation of a new service. All associated nonrecurring installation charges will apply for the new service. A new minimum period will be established for the new service. Minimum period requirements will not apply to monthly charges for the SHARP facility.

K. Switched Data Service (SDS)

SDS nonrecurring installation charges are assessed per Interface Group 6 or 9 per dedicated trunk provisioned as CST3 or FGD equipped with SDS. The customer is assessed the "first" installation charge for the first trunk and the "each additional" installation charge for each additional trunk installed. Switched Transport trunk nonrecurring installation of service charges do not apply. SDS is subject to all applicable CST3 and FGD recurring rates. Rates and charges for SDS are set forth in 6.8, following.

6. SWITCHED ACCESS SERVICE

6.7 RATE REGULATIONS

6.7.1 DESCRIPTION AND APPLICATION OF RATES AND CHARGES

K. Switched Data Service (SDS) (Cont'd)

Any change in existing service equipped with SDS will be treated as a discontinuance of existing service and installation of new service with the exception of changing to Clear Channel Capability and SS7 out of band signaling. When Clear Channel Capability and SS7 out of band signaling are available in the same Company digital end office as SDS and the following conditions are met, the customer may discontinue SDS without disconnecting the CST3 or FGD provisioned service by ordering Clear Channel Capability and SS7 out of band signaling. The customer will be assessed the nonrecurring charges as set forth in 6.8.1.D.5.a. and 6.8.2.C.32., following. (T)

- The customer changes from SDS provisioned on CST3 or FGD with multifrequency signaling to CST3 or FGD with SS7 out of band signaling and Clear Channel Capability with no other changes in optional features and or BSE's.

- The same customer premises, quantity of trunks, service type, direct routing, and Interface Group Category 6 or 9 are maintained.

- The traffic type on the SDS equipped CST3 or FGD service is changed to the Clear Channel Capability originating and/or terminating traffic type as set forth in 6.1.1, preceding.

- All service orders are received at the same time and the disconnect date and the connect date are the same when rearranging trunk groups from MF to SS7 out of band signaling with Clear Channel Capability.

- Multiple MF trunk groups may be combined into a single SS7 trunk group with Clear Channel Capability when all trunks within the group are traffic engineered as a unit and all the communication paths within the group are interchangeable.

6. SWITCHED ACCESS SERVICE

6.7 RATE REGULATIONS
6.7.1 DESCRIPTION AND APPLICATION OF RATES AND CHARGES (Cont'd)

L. BSE Rate Applications

1. BSEs with separate nonrecurring charges, as set forth in 6.8.2., which apply on an initial and subsequent basis are:

   - Flexible ANI (BSE)
   - Called Directory Number Delivery (BSE)
   - Caller Identification - Number (BSE) (T)
   - Caller Identification - Bulk (BSE) (T)
   - Clear Channel Capability (BSE)
   - Message Delivery Service (BSE)
   - Message Delivery Service - Interoffice (BSE) (N)
   - *DID* Trunk Queuing (BSE)
   - Queuing for Use With UCD (BSE)
   - Answer Supervision - Lineside (BSE) (T)

2. BSEs with separate nonrecurring charges, as set forth in 6.8.2., which only apply on a subsequent basis are:

   - Automatic Number Identification (BSE)
   - Alternate Traffic Routing (BSE)

3. If the following BSEs are installed coincident with the initial installation of service, nonrecurring charges will not apply for the BSEs.

   - Hunt Group Arrangement (BSE)
   - Uniform Call Distribution (BSE)
   - Call Transfer (BSE)
   - Three-Way Calling (BSE)
   - Make Busy (BSE)
   - Call Forwarding Variable (BSE)

6. SWITCHED ACCESS SERVICE

6.7 RATE REGULATIONS
6.7.1 DESCRIPTION AND APPLICATION OF RATES AND CHARGES

L. BSE Rate Applications (Cont'd)

4. When the BSEs as set forth in 1., 2. and 3., preceding, are ordered on a subsequent basis without any other order activity, the BSE Access Service Order charge will apply, per order, except as set forth in 5., following.

5. The BSE Access Service order charge will not apply on Flexible ANI (BSE) or Clear Channel Capability (BSE).

6. The BSEs as set forth in 1., 2. and 3., preceding, are not subject to Switched Transport nonrecurring charges.

M. DNAL

1. The DNAL is a monthly rated service and is not subject to Switched Transport, Local Switching or Carrier Common Lines rates. (C)

2. DNAL rates and charges are in addition to the rates and charges for the associated Switched Access circuit and BSE.

3. A monthly DNAL Transport Facility rate, per mileage band, and a monthly DNAL Transport Termination rate, as set forth in 6.8, following, shall be assessed per facility. The monthly rates for Entrance Facilities and DTT facilities are not applicable.

4. A nonrecurring DNAL Transport Termination charge, as set forth in 6.8, following, shall be assessed per point of termination.

6. SWITCHED ACCESS SERVICE

6.7 RATE REGULATIONS
6.7.1 DESCRIPTION AND APPLICATION OF RATES AND CHARGES (Cont'd)

N. Information Surcharge

The Information Surcharge rate element recovers the cost of white page directory expenses. Information Surcharge is assigned to the Interstate Information Category through Part 36 and 69 of the F.C.C.'s rules. Information Surcharge is applicable to all Interstate Switched Access Service minutes of use. Premium and transitional rate applications as described in 6.7.1.D., preceding, are applicable to Information Surcharge. These rates are set forth in 6.8, following.

O. Clear Channel Capability (BSE)

When Clear Channel Capability (CCC) is ordered and installed coincident with initial installation of CST3 or FGD service, a CCC nonrecurring charge applies per trunk group in addition to the initial installation charge(s) for CST3 or FGD Service. Rates and charges for CCC are as set forth in 6.8.2, following.

When CCC is ordered on existing trunkside service, the service may be rearranged when the following conditions are met:

1. The customer changes from CST3 or FGD service with multifrequency signaling to CST3 or FGD services with SS7 out of band signaling and Clear Channel Capability with no other change in optional features and/or BSE's.

2. The customer changes from CST3 or FGD Service with SS7 out of band signaling to CST3 or FGD Services with SS7 out of band signaling and Clear Channel Capability with no other change in optional features and/or BSEs.

6. SWITCHED ACCESS SERVICE

6.7 RATE REGULATIONS
6.7.1 DESCRIPTION AND APPLICATION OF RATES AND CHARGES

O. Clear Channel Capability (BSE) (Cont'd)

3. The same customer premises, quantity of trunks, service type, direct routing and Interface Group Category 6 or 9 are maintained.

4. The traffic type on CST3 or FGD service is changed to the Clear Channel Capability originating and/or terminating traffic type as set forth in 6.1.1, preceding.

5. All service orders are received at the same time and the disconnect date and the connect date are the same when rearranging trunk groups from MF to SS7 out of band signaling with Clear Channel Capability.

6. Multiple MF trunk groups may be combined into a single SS7 trunk group with Clear Channel Capability when all trunks within the group are traffic engineered as a unit and all the communication paths within the group are interchangeable.

   Rearrangement charges from CST3 or FGD Service with multifrequency signaling to CST3 or FGD Service with SS7 out of band signaling and Clear Channel Capability will be assessed the nonrecurring charges as set forth in 6.8.1.D.5.a. and 6.8.2.C.32., following. (T)

   Rearrangement charges from CST3 or FGD service with SS7 out of band signaling to CST3 or FGD service with SS7 out of band signaling and Clear Channel Capability, will be assessed the "first trunk" charge in association with Interface Group Category 6 or 9 service. Each additional trunk will be assessed the "each additional trunk" charge in association with Interface Group Category 6 or 9 service. The nonrecurring charge for Clear Channel Capability, as set forth in 6.8.2., is assessed per trunk group in addition to the nonrecurring charges per (T)
   trunk as set forth in 6.8.1.D.5.b., following. (T)

   The removal of the CCC arrangement from existing trunkside service, will be treated as a discontinuance of the existing service and installation of new service. All associated nonrecurring installation charges will apply for the new service. A new minimum period will be established for the new service.

6. SWITCHED ACCESS SERVICE

6.7 RATE REGULATIONS
6.7.1 DESCRIPTION AND APPLICATION OF RATES AND CHARGES (Cont'd)

P. Entrance Facility

The Entrance Facility monthly rate is assessed based on the type of facility provided, Voice Grade, DS1 or DS3. When Lineside Switched Access Service is provided, the Voice Grade Entrance Facility rate is assessed for each Lineside service provided, unless the customer requests a DS1 or DS3 Entrance Facility. The Entrance Facility rate is assessed even when the customer's premises and the SWC are located in the same building. The Entrance Facility rate is in addition to the rates assessed for DTT and TST. Rates and charges are set forth in 6.8, following. (C)

Q. Direct-Trunked Transport

1. Except as set forth in 2. and 3., following, for each DTT facility provided, Voice Grade, DS1 or DS3, a fixed monthly rate, per mile band, and a monthly rate per mile is assessed. The DTT rates are in addition to the Entrance Facility rate. Mileage measurement is described in 6.7.11, following. Rates and charges are set forth in 6.8, following.

2. When Lineside Switched Access service is provided, the Voice Grade DTT rates are assessed for each Lineside service, unless the customer requests a DS1 or DS3 facility. DTT rates are assessed between the SWC of the customer's premises and the dial tone office. When traffic is terminated in an end office which is not the dial tone office, Tandem Transmission rates, as set forth in R., following, are assessed between the dial tone office and the end office where the traffic terminates. The Tandem Transmission rates are in addition to the DTT rates. Tandem Switching rates will not be assessed.

3. When the customer orders DTT to a remote switching system or module (RSS or RSM), DTT rates are assessed between the SWC and the host office and Tandem Transmission rates, as set forth in R., following, are assessed between the host and the RSS or RSM. Mileage measurement rules are set forth in 6.7.11, following. Tandem Switching rates will not be assessed.

6. SWITCHED ACCESS SERVICE

6.7 RATE REGULATIONS
6.7.1 DESCRIPTION AND APPLICATION OF RATES AND CHARGES (Cont'd)

R. Tandem-Switched Transport

The TST rate category is composed of Tandem Transmission, Tandem Switching, Access Tandem Trunk Port and Common Transport Multiplexing rates. Mileage measurement is described in 6.7.11, following. Rates and charges are set forth in 6.8, following. (S-y)

1. Tandem Transmission

The Tandem Transmission rates are assessed on a per-MOU basis when tandem routing is provided for trunkside services. Tandem Transmission rates are also assessed to FGA and CSL Service when traffic is terminated in an end office that is not the dial tone office as set forth in 6.7.11, following. The Tandem Transmission rates are portrayed in mileage bands. There are two rates that apply for each band, a fixed rate per band and a rate per mile, per minute.

2. Tandem Switching

The Tandem Switching rate is assessed on a per-MOU basis to all Switched Access minutes when tandem switching functions are utilized. Tandem Switching is not assessed to FGA or CSL Service. (S-y)

3. Access Tandem Trunk Port (S-y)

The Access Tandem Trunk Port (ATTP) is a monthly rate assessed per FG or BSA trunk in service terminating on the serving wire center side of the access tandem. If the customer combines Voice DA with trunkside Switched Access Service, only one ATTP charge is assessed per trunk. ATTP is not assessed to FGA or CSL. (S-y) (C-x-y) (S-y)

4. Common Transport Multiplexing

Common transport multiplexing is a per-MOU rate assessed to all Switched Access minutes utilizing common transport from the access tandem to all subtending end offices for trunkside services. Nonrecurring charges are not assessed for common transport multiplexing. (S-y

(x) Issued under the authority of Special Permission No. 98-018.

(y) Reissued material filed under Transmittal Nos. 884 and 887 effective January 1, 1998.

6. SWITCHED ACCESS SERVICE

6.7 RATE REGULATIONS
6.7.1 DESCRIPTION AND APPLICATION OF RATES AND CHARGES (Cont'd)

S. Multiplexing associated with EF and DTT facilities

A nonrecurring charge is assessed per arrangement when multiplexing equipment is not installed at the same time as the associated Entrance Facility and/or DTT facility. The multiplexing monthly rate is assessed on a per-arrangement basis.

(D)

(D)

6. SWITCHED ACCESS SERVICE

6.7 RATE REGULATIONS
6.7.1 DESCRIPTION AND APPLICATION OF RATES AND CHARGES (Cont'd)

T. 500 Access Service (T)

A 500 Access Service Carrier Identification Charge is assessed for each 500 call delivered to the customer. This charge is in addition to the rates and charges for the rate categories described in 6.1.2, preceding, which are applicable to all Switched Access Services. The per-call rate is set forth in 6.8.2, following.

An Activation Nonrecurring Charge applies to activate the 500 NXX code(s). This charge is assessed per NXX code, per required point of six-digit translation.

In addition to the Activation Nonrecurring Charge, a Route Pattern Nonrecurring Charge is assessed on a initial and subsequent basis when the customer orders 500 Access Service in a LATA to establish a route pattern. This charge is assessed per each point in the network where 500 service routing logic is required to deliver 500 traffic to the identified access customer. The nonrecurring charges for 500 Access Service are set forth in 6.8.2, following.

U. Carrier Identification Parameter (T)

A monthly recurring rate is assessed per CST3 or Feature Group D trunk equipped with Carrier Identification Parameter (CIP). When CST3 and Feature Group D Switched Access is initially ordered as new service with the SS7 Out of Band Signaling and the CIP option, the CIP Nonrecurring Charge is assessed in addition to the installation charges for the Feature Group D trunks, per access order. When the CIP optional feature is ordered on existing CST3 or Feature Group D trunks equipped with SS7 Out of Band Signaling, the SS7 Out of Band Signaling Service Order Rearrangement Charge and the CIP Nonrecurring Charge are assessed per access order. When existing CST3 or Feature Group D Switched Access with Multifrequency (MF) signaling is being rearranged to be equipped with SS7 Out of Band Signaling and the CIP optional feature, the SS7 Service Order Rearrangement Charge, the SS7 Rearrangement Charges and the CIP Nonrecurring Charge are assessed. The SS7 Service Order Rearrangement charge and the SS7 Trunk Rearrangement Charges are set forth in 6.8.1.D., following, and the CIP Nonrecurring Charge is set forth in 6.8.2.G., following.

6.7.2 MINIMUM PERIODS

Minimum periods for Switched Access Service are described in 5.2.5, preceding.

6. SWITCHED ACCESS SERVICE

6.7 RATE REGULATIONS (Cont'd)

6.7.3 MINIMUM MONTHLY CHARGE (M)

Switched Access Service is subject to a minimum monthly charge. The minimum charge applies for the total capacity provided. The minimum monthly charge consists of the following elements:

- The minimum monthly charge for usage rated elements is the sum of the charges set forth in 6.8, following, for the measured or assumed usage for the month.

- For monthly rated elements, the minimum monthly charge is the tariffed monthly rate as set forth in 6.8, following.

- When Lineside Access or *DID* services are provided where actual measurement capabilities do not exist, the customer will always be billed for the assumed average number of access minutes for all applicable usage rated elements. (M)

Certain material on this page formerly appeared on Page 6-203.

6. SWITCHED ACCESS SERVICE

6.7 RATE REGULATIONS (Cont'd)

6.7.4 CHANGE OF SWITCHED ACCESS INTERFACE GROUP CATEGORY

Changes from one Switched Access Service Interface Group Category to another will be treated as a discontinuance of service and the installation of service with the establishment of a new minimum period as set forth in 5.2.5, preceding. When the following conditions are met, the nonrecurring charges will not apply:

A. Interface Group Category 6 (IG6) on CST1 or Feature Group B Service to Interface Group Category 9 (IG9) on CST1 or Feature Group B and CST3 or Feature Group D Service

- The same customer premises, quantity of trunks, routing, traffic type, direction (i.e., one-way, two-way), optional features and BSEs are maintained.
- The orders for the change from IG6 to IG9 are received at the same time.
- The trunks are upgraded from IG6 to IG9 in groups of 24 trunks.
- In accordance with 6.7.5, following, the disconnect date for the CST1 or FGB Service with IG6 is no more than 90 days from the connect date of the CST3 or FGD Service with IG9.
- The disconnect date for IG6 is the connect date for IG9 when the CST1 or FGB service type is not changing.

6. SWITCHED ACCESS SERVICE

6.7 RATE REGULATIONS
6.7.4 CHANGE OF SWITCHED ACCESS INTERFACE GROUP CATEGORY (Cont'd)

B. Interface Group Category 6 to Interface Group Category 9 on CST3 or Feature Group D Service

- The same customer premises, quantity of trunks, service type, routing, traffic type, direction (i.e., one-way, two-way), optional features and BSEs are maintained.
- The orders for the change from IG6 to IG9 are received at the same time.
- The trunks are upgraded from IG6 to IG9 in groups of 24 trunks.
- The disconnect date for IG6 is the connect date for IG9.

Certain material previously found on this page can now be found on Page 6-205.1.

6. SWITCHED ACCESS SERVICE

6.7 RATE REGULATIONS (Cont'd) (T)

6.7.5 CHANGE OF SWITCHED ACCESS SERVICE TYPE (M)

Changes from one type of Switched Access Service to another will be treated as a discontinuance of service and the installation of service with the establishment of a new minimum period as set forth in 5.2.5, preceding. When the following conditions are met, nonrecurring charges will not apply. (M) (M) (T)

A. Service type upgrade from CSL, CST1, FGA or FGB to CST3 or FGD Service (M)

- The same customer premises, quantity of trunks, routing, traffic type, direction (i.e., one-way, two-way), optional features and BSE's are maintained. (M) (M)

- The same interface group category is maintained (except as set forth in 6.7.4, preceding). (M) (M)

- The orders for the disconnect of the Lineside connection, CST1 or FGB Service and the start of CST3 or FGD Service are placed with the Company at the same time. (M) (T)

- The disconnect date for the Lineside connection, CST1 or FGB Service is no more than 90 days from the connect date of CST3 or FGD Service. (M) (M)

- At the customer's option, the Company will allow a change to SS7 out of band signaling and a change in direction from one-way to two-way at the same time as the service type upgrade. When this kind of request is received, the customer will be assessed a SS7 Rearrangement Charge when conditions in 6.7.1.C.5., preceding and the above conditions are met. A new minimum period as set forth in 5.2.5, preceding, will also be established. (N) (N)

Certain material found on this page formerly appeared on Page 6-205.

6. SWITCHED ACCESS SERVICE

6.7 RATE REGULATIONS
6.7.5 CHANGE OF SWITCHED ACCESS SERVICE TYPE (Cont'd)

B. Service type upgrade from CST2 or Feature Group C Service to CST3 or Feature Group D Service

When CST2 or FGC service is upgraded to a CST3 or FGC service, the nonrecurring charge will not apply. Because CST2 or FGC is no longer available in an end office once the end office is equipped with equal access capabilities, such upgrades will be performed by the Company without the customer being required to place an order for the change, unless a customer specifies an increase in the number of transmission paths. (T)

When the effective dates for the disconnect and start of service are the same, the minimum period, as set forth in 5.2.5, preceding, will not change. When the effective dates for the disconnect and start of service are different, a new minimum period will be established for the CST3 or FGD Service. For all other changes other than a change in service type, a new minimum period will be established on the CST3 or FGD. (T) (T)

At the customer's option, the Company will allow a change to SS7 out of band signaling and a change in direction from one-way to two-way to occur at the same time the CST2 or FGC is upgraded to CST3 or FGD. When this kind of request is received, the customer will be assessed a SS7 Rearrangement Charge when conditions in 6.7.1.C.5., preceding, are met. When upgrading CST2 or FGC to CST3 or FGD with SS7 out of band signaling, the disconnect date and the connect date on the orders must be the same date and a new minimum period will apply on the CST3 or FGD service. (N) (N)

If a customer has the optional feature, Multiple POTS Tandem Sectorization (MPTS) and a non-equal access end office is upgraded to a equal access end office with the tandem serving area, the MPTS nonrecurring charges do not apply.

6. SWITCHED ACCESS SERVICE

6.7 RATE REGULATIONS (Cont'd)

6.7.6 MOVES

A move involves a change in the physical location or reconfiguration of the following:

- The point of termination of the Entrance Facility (EF) at the customer's premises is moving
- The customer's premises and associated EF is moving
- The DTT facility and associated Lineside and/or Trunkside Switched Access Services are reconfigured as set forth in A. and B., following. (C)

The charges for a move or reconfiguration are dependent on whether the move or reconfiguration is within the same serving wire center, as set forth in A., (T) following, or to a different serving wire center, as set forth in B., following. (T) New minimum period requirements will be established for moved or reconfigured services. Any changes to the existing Switched Access facilities, lines, trunks, optional features and BSEs as they exist at the current location, excluding a change in Circuit Facility Assignment (CFA), made in conjunction with a move or reconfiguration, will be treated as a discontinuance and a start of new service and all associated nonrecurring installation charges will apply. The addition of lines and trunks made in conjunction with a move or reconfiguration will be treated as a start of new service and all associated nonrecurring installation charges and new minimum period requirements will apply. The customer will also remain responsible for satisfying all outstanding minimum period charges for any disconnected service as the result of a move or reconfiguration.

6. SWITCHED ACCESS SERVICE

6.7 RATE REGULATIONS
6.7.6 MOVES (Cont'd)

A. Application of Move Charges Within the Same Serving Wire Center (SWC)

1. EF Move to a New Location Within the Same Building, same SWC, for the Same Customer

   The charge for moving an EF to a new location within the same building, same SWC, for the same customer, is one-half of the Move Within the Same Serving Wire Center charge as set forth in 6.8.1, following. The first line or trunk is assessed one-half of the "first" move charge and each additional line or trunk is assessed one-half of the "each additional" move charge per Interface Group 1, 2, 6 or 9, per Access Order. In addition, one-half of the EF Nonrecurring Installation charge based on the capacity affected, per point of termination, per Access Order is assessed.

2. Reconfiguration of a DTT Facility and Associated Lineside or Trunkside Switched Access Services from an EF of One Customer to an EF of Another Customer, or to an Expanded Interconnection-Collocation Channel Termination (EICT) or Interconnect Tie Pair (ITP) all Within the Same Building, Same SWC. EICT and ITP are set forth in Section 21. (C) (C)

   The charge for reconfiguring a DTT facility and associated Lineside or Trunkside Switched Access Services from an EF of one customer to (a.) an EF of another customer where its customer premises is located within the same building, same SWC, or (b.) to an EICT or ITP located within the same building, same SWC, is one-half of the Move Within the Same Serving Wire Center charge as set forth in 6.8.1, following. The first line or trunk is assessed one-half of the "first" move charge and each additional line or trunk is assessed one-half of the "each additional" move charge per Interface Group 1, 2, 6 or 9, per Access Order. The customer providing the EF, EICT, or ITP is responsible for providing the CFA and is assessed an EF, EICT, or ITP Nonrecurring Installation charge when a new EF, EICT, or ITP is ordered. (C) (C) (C) (C)

(D)

6. SWITCHED ACCESS SERVICE

6.7 RATE REGULATIONS
6.7.6 MOVES

A. Application of Move Charges Within the Same Serving Wire Center (Cont'd)

3. Reconfiguration of a DTT Facility and Associated Lineside or Trunkside Switched Access Services from One EICT or ITP to Another EICT or ITP, all Within the Same Building, Same SWC. (C)

   The charge for reconfiguring a DTT facility and associated Lineside or Trunkside Switched Access Services from one EICT or ITP to another EICT or ITP within the same building, same SWC, is one-half of the Move Within the Same Serving Wire Center charge as set forth in 6.8.1, following. The first line or trunk is assessed one-half of the "first" move charge and each additional line or trunk is assessed one-half of the "each additional" move charge per Interface Group 1, 2, 6 or 9, per Access Order. The customer providing the EICT or ITP is responsible for providing the CFA and is assessed an EICT or ITP Nonrecurring Installation charge when a new EICT or ITP is ordered. (C) (C) (C)

4. Reconfiguration of a DTT Facility and Associated Lineside or Trunkside Switched Access Services from an EICT or ITP to an EF, all Located Within the Same Building, same SWC. (C)

   The charge for reconfiguring a DTT facility and associated Lineside or Trunkside Switched Access Services from an EICT or ITP to an EF where its customer premises is located within the same building, same SWC, is one-half of the Move Within the Same Serving Wire Center charge as set forth in 6.8.1, following. The first line or trunk is assessed one-half of the "first" move charge and each additional line or trunk is assessed one-half of the "each additional" move charge per Interface Group 1, 2, 6 or 9, per Access Order. The customer providing the EF is responsible for providing the CFA and is assessed an EF Nonrecurring Installation charge when a new EF is ordered. (C)

6. SWITCHED ACCESS SERVICE

6.7 RATE REGULATIONS
6.7.6 MOVES

A. Application of Move Charges Within the Same Serving Wire Center (Cont'd)

5. EF Move to a Different Building, Same SWC for the Same Customer

   The charge for moving an EF to a different building, same SWC, for the same customer is the Move Within the Same Serving Wire Center charge as set forth in 6.8.1, following. The first line or trunk is assessed the "first" move charge and each additional line or trunk is assessed the "each additional" move charge per Interface Group 1, 2, 6 or 9, per Access Order. In addition, a full EF Nonrecurring Installation charge based on the capacity affected, per point of termination, per Access Order is assessed.

6. Reconfiguration of a DTT Facility and Associated Lineside or Trunkside Switched Access Services from an EF of One Customer to an EF of Another Customer or to an EICT or ITP Located in a Different Building, Same SWC. (C)

   The charge for reconfiguring a DTT facility and associated Lineside or Trunkside Switched Access Services from an EF of one customer to (a.) an EF of another customer where its customer premises is located in a different building, same SWC, or (b.) to an EICT located in a different building, same SWC is the Move Within the Same Serving Wire Center charge as set forth in 6.8.1, following. The first line or trunk is assessed the "first" move charge and each additional line or trunk is assessed the "each additional" move charge per Interface Group 1, 2, 6 or 9, per Access Order. The customer providing the EF, EICT, or ITP is responsible (C)
   for providing the CFA and is assessed an EF, EICT, or ITP Nonrecurring
   Installation charge when a new EF, EICT, or ITP is ordered. (C)

6. SWITCHED ACCESS SERVICE

6.7 RATE REGULATIONS
6.7.6 MOVES

A. Application of Move Charges Within the Same Serving Wire Center (Cont'd)

7. Reconfiguration of a DTT Facility and Associated Lineside or Trunkside Switched Access Services from an EICT or ITP to an EF Located in a Different Building, Same SWC. (C)

   The charge for reconfiguring a DTT facility and associated Lineside or Trunkside Switched Access Services from an EICT or ITP to an EF where its customer premises is located in a different building, same SWC, is the Move Within the Same Serving Wire Center charge as set forth in 6.8.1, following. The first line or trunk is assessed the "first" move charge and each additional line or trunk is assessed the "each additional" move charge per Interface Group 1, 2, 6 or 9, per Access Order. The customer providing the EF is responsible for providing the CFA and is assessed an EF Nonrecurring Installation charge when a new EF is ordered. (C)

6. SWITCHED ACCESS SERVICE

6.7 RATE REGULATIONS
6.7.6 MOVES (Cont'd)

B. Application of Move Charges to a Different Serving Wire Center (SWC)

1. EF Move to a Different SWC for the Same Customer

   The charge for moving an EF to a different SWC for the same customer is assessed the Move to a Different Serving Wire Center charge as set forth in 6.8.1, following. The first line or trunk is assessed the "first" move charge and each additional line or trunk is assessed the "each additional" move charge per Interface Group 1, 2, 6 or 9, per Access Order. In addition, a full EF Nonrecurring Installation charge based on the capacity affected, per point of termination, per Access Order is assessed.

2. Reconfiguration of a DTT Facility and Associated Lineside or Trunkside Switched Access Services from an EF of One Customer to an EF of Another Customer or to an EICT or ITP in a Different SWC. (C)

   The charge for reconfiguring a DTT facility and associated Lineside or Trunkside Switched Access Services from an EF of one customer to (a.) an EF of another customer where its customer premises is served by a different SWC or (b.) to an EICT or ITP located in a different SWC is the Move to A Different Serving Wire (C) Center charge as set forth in 6.8.1, following. The first line or trunk is assessed of the "first" move charge and each additional line or trunk is assessed of the "each additional" move charge per Interface Group 1, 2, 6 or 9, per Access Order. The customer providing the EF, EICT, or ITP is responsible for providing the CFA (C) and is assessed an EF, EICT, or ITP Nonrecurring Installation charge when a new EF. EICT, or ITP is ordered. (C)

6. SWITCHED ACCESS SERVICE

6.7 RATE REGULATIONS
6.7.6 MOVES

B. Application of Move Charges to a Different Serving Wire Center (SWC) (Cont'd)

3. Reconfiguration of a DTT Facility and Associated Lineside or Trunkside Switched Access Services from One EICT or ITP to Another EICT or ITP Located in a Different SWC (C)

   The charge for reconfiguring a DTT facility and associated Lineside or Trunkside Switched Access Services from one EICT or ITP to another EICT or ITP located in a different SWC is the Move to a Different Serving Wire Center charge as set forth in 6.8.1, following. The first line or trunk is assessed the "first" move charge and each additional line or trunk is assessed the "each additional" move charge per Interface Group 1, 2, 6 or 9, per Access Order. The customer providing the EICT or ITP is responsible for providing the CFA and is assessed an EICT or ITP Nonrecurring Installation charge when a new EICT or ITP is ordered. (C) (C) (C)

4. Reconfiguration of a DTT Facility and Associated Lineside or Trunkside Switched Access Services from an EICT or ITP to an EF Located in a Different SWC (C)

   The charge for reconfiguring a DTT facility and associated Lineside or Trunkside Switched Access Services from an EICT or ITP to an EF where its customer premises is served by a different SWC is the Move to a Different Serving Wire Center charge as set forth in 6.8.1, following. The first line or trunk is assessed the "first" move charge and each additional line or trunk is assessed the "each additional" move charge per Interface Group 1, 2, 6 or 9, per Access Order. The customer providing the EF is responsible for providing the CFA and is assessed an EF Nonrecurring Installation charge when a new EF is ordered. (C)

6. SWITCHED ACCESS SERVICE

6.7 RATE REGULATIONS (Cont'd)

6.7.7 MEASURING ACCESS MINUTES

Customer traffic to end office switches will be measured (i.e., recorded or assumed) by the Company at end office switches or access tandem switches. Originating and terminating calls will be measured (i.e., recorded or assumed) by the Company to determine the basis for computing chargeable access minutes. In the event the customer message detail is not available because the Company lost or damaged tapes or experienced recording system outages, the Company shall estimate the volume of lost customer access minutes of use based on previously known values. The measured minutes are the chargeable access minutes for calls over the following serving arrangements: (T) (T)

- For terminating calls over
  - CSL and FGA
  - CST1 and FGB
  - CST2 to 800/800-type and FGC to 800/800-type
  - CST3 and FGD

- For originating calls over
  - CSL and FGA used for resale
  - CST1 and FGB
  - CST2 and FGC (where measurement capability is available)
  - CST3 and FGD
  - *DID*

- For originating calls over CSL and FGA not used for resale

For originating calls over CSL and FGA not used for resale and CST2 and FGC (where measurement capability is not available), chargeable originating access minutes are derived from recorded minutes in the following manner.

6. SWITCHED ACCESS SERVICE

6.7 RATE REGULATIONS
6.7.7 MEASURING ACCESS MINUTES (Cont'd)

STEP 1

Obtain recorded originating minutes and messages (measured as set forth in A., and C. following for CSL and FGA not used for resale and CST2 and FGC where measurement capability is not available, respectively) from the appropriate recording data.

STEP 2

Obtain the total messages and attempts by multiplying the originating measured messages by the "attempts per message ratio". "Attempts per message ratios" (A/M) are obtained separately for the major call categories such as DDD, operator, 500, 8XX, 900, Voice DA and international from a sample study which analyzes the ultimate completion status of the total attempts which receive acknowledgment from the customer. That is, Measured Messages divided by Completion Ratio equals Total Attempts. (C)

STEP 3

Obtain the total non-conversation time additive (NCTA) by multiplying the total attempts (obtained in Step 2) by the NCTA per-attempt ratio. The NCTA per-attempt ratio is obtained from the sample study identified in Step 2 by measuring the non-conversation time associated with both completed and incompleted attempts. The total NCTA is the time on a completed attempt from customer acknowledgment of receipt of call to called party answer (set up and ringing) plus the time on an incompleted attempt from customer acknowledgment of call until the access tandem or end office receives a disconnect signal (ring - no answer, busy or network blockage). That is, Total Attempts times Non-Conversation Time per Attempt Ratio equals Total NCTA.

6. SWITCHED ACCESS SERVICE

6.7 RATE REGULATIONS
6.7.7 MEASURING ACCESS MINUTES (Cont'd)

STEP 4

Obtain total chargeable originating access minutes by adding the total NCTA (obtained in Step 3) to the recorded originating measured minutes (obtained in Step 1). That is, Measured Minutes plus NCTA equals Chargeable Originating Access Minutes.

Following is an example which illustrates how the chargeable originating access minutes are derived from the measured originating minutes using this formula.

Where:	Measured Minutes (M. Min.)	=	7,000
	Measured Messages (M. Mes.)	=	1,000
	Attempts Per Message Ratio (A/M)	=	1.333
	NCTA Per Attempt	=	.4

1. Total Attempts = 1,000 (M. Mes.) x 1.333 ..... = 1,333

2. Total NCTA = .4 (NCTA per Attempt) x 1,333 ..... = 533.2

3. Total Chargeable Originating Access Minutes =
   7,000 (M. Min.) + 533.2 (NCTA) ..... = 7,533.2

When assumed minutes are used, the assumed minutes are the chargeable access minutes.

Lineside access minutes or fractions thereof, the exact value of the fraction being a function of the switch technology where the measurement is made, are accumulated over the billing period for each line or hunt group, and are then rounded up to the nearest access minute for each line or hunt group. Trunkside access minutes or fraction thereof, the exact value of the fraction being a function of the switch technology where the measurement is made, are accumulated over the billing period for each end office, and are then rounded up to the nearest access minute for each end office.

6. SWITCHED ACCESS SERVICE

6.7 RATE REGULATIONS
6.7.7 MEASURING ACCESS MINUTES (Cont'd)

Assumed minutes are used for Lineside and *DID* Access Services which originate or terminate in end offices not equipped with measurement capabilities.

The assumed average interstate access minutes are set forth following.

- When a Lineside service arranged for two-way calling is provided where neither the originating nor the terminating access minutes are recorded, the average interstate access minutes will be assumed.

- Where recording capability exists for either originating or terminating usage, but not both, on a line arranged for two-way calling, the number of access minutes per-line will be the assumed average interstate access minutes, or the recorded usage, whichever is greater. If the usage in the measured direction exceeds the assumed number of minutes, it will be assumed that there is zero usage in the unmeasured direction. If the measured usage is less than the assumed number of minutes, the usage in the unmeasured direction will be assumed to be the assumed number of access minutes minus the measured usage (e.g., 5919 - 4000 measured = 1919 assumed in unmeasured direction).

Assumed Average Interstate Access Minutes

5943

6. SWITCHED ACCESS SERVICE

6.7 RATE REGULATIONS
6.7.7 MEASURING ACCESS MINUTES (Cont'd)

- When a Lineside service arranged for originating calling only is provided where originating access minutes are not recorded, the average originating access minutes will be assumed, and no terminating access minutes will apply.

Assumed Average Originating Access Minutes

3732

- When a Lineside service arranged for terminating calling only is provided where terminating access minutes are not recorded, the terminating access minutes will be assumed, and no originating access minutes will apply.

Assumed Average Terminating Access Minutes

2211

- When any or all of the usage over an unmeasured access line originates from or terminates to a WATS Access Line and the total access line usage recorded at the WATS Serving Office exceeds the assumed usage set forth preceding for Lineside Access, the recorded usage will be billed to the customer in lieu of the assumed usage.

APPLICABLE IN ID (SPOKANE LATA), OR, WA ONLY

When a *DID* Switched Access Service is provided where originating *DID* access minutes are not recorded, the assumed average originating access minutes are 5119 access minutes.

6. SWITCHED ACCESS SERVICE

6.7 RATE REGULATIONS
6.7.7 MEASURING ACCESS MINUTES (Cont'd)

A. Lineside Access Usage Measurement

For originating calls over Lineside Access, usage measurement begins when the originating Lineside Access entry switch receives an off-hook supervisory signal forwarded from the customer's point of termination. (Where Lineside Access is used for resale, this off-hook signal is generally provided by the customer's equipment. Where Lineside Access is not used for resale, the off-hook signal is generally forwarded by the customer's equipment when the called party answers.)

The measurement of originating call usage over Lineside Access ends when the originating Lineside Access entry switch receives an on-hook supervisory signal from either the originating end user's end office, indicating the originating end user has disconnected, or the customer's point of termination, whichever is recognized first by the entry switch.

For terminating calls over Lineside Access, usage measurement begins when the terminating Lineside Access entry switch receives an off-hook supervisory signal from the terminating end user's end office, indicating the terminating end user has answered. The measurement of terminating call usage over Lineside Access ends when the terminating Lineside Access entry switch receives an on-hook supervisory signal from either the terminating end user's end office, indicating the terminating end user has disconnected, or the customer's point of termination, whichever is recognized first by the entry switch.

6. SWITCHED ACCESS SERVICE

6.7 RATE REGULATIONS
6.7.7 MEASURING ACCESS MINUTES (Cont'd)

B. CST1 and Feature Group B Usage Measurement

For originating calls over CST1 and FGB, usage measurement begins when the originating CST1 or FGB entry switch receives answer supervision forwarded from the customer's point of termination, indicating that the customer's equipment has answered.

The measurement of originating call usage over CST1 and FGB ends when the originating CST1 or FGB entry switch receives disconnect supervision from either the originating end user's end office, indicating the originating end user has disconnected, or the customer's point of termination, whichever is recognized first by the entry switch.

For terminating calls over CST1 and FGB, usage measurement begins when the terminating CST1 or FGB entry switch receives answer supervision from the terminating end user's end office, indicating the terminating end user has answered.

The measurement of terminating call usage over CST1 and FGB ends when the terminating CST1 or FGB entry switch receives disconnect supervision from either the terminating end user's end office, indicating the terminating end user has disconnected, or the customer's point of termination, whichever is recognized first by the entry switch.

C. CST2 and Feature Group C Usage Measurement

For originating calls over CST2 and FGC, if measurement capabilities are not available, usage measurement begins when the originating CST2 or FGC entry switch receives answer supervision from the customer's point of termination, indicating the called party has answered. If measurement capabilities are available, usage measurement begins when the originating CST2 or FGC entry switch receives the first wink supervisory signal forwarded from the customer's point of termination.

6. SWITCHED ACCESS SERVICE

6.7 RATE REGULATIONS
6.7.7 MEASURING ACCESS MINUTES

C. CST2 and Feature Group C Usage Measurement (Cont'd)

The measurement of originating call usage over CST2 and FGC ends when the originating CST2 or FGC entry switch receives disconnect supervision from either the originating end user's end office, indicating the originating end user has disconnected, or the customer's point of termination, whichever is recognized first by the entry switch.

For terminating calls over CST2 and FGC to services other than 800/800-type, 900 or Voice DA, terminating CST2 and FGC usage may not be directly measured at the terminating entry switch, but may be imputed from originating usage, excluding usage from calls to 8XX, 900 or Voice DA Services. Actual measured usage will be used where available, rather than an imputed value. (C) (C)

For terminating calls over CST2 and FGC to 800/800-type usage measurement begins when the terminating CST2 or FGC entry switch receives answer supervision from the terminating end user's end office, indicating the terminating 800/800-type end user has answered. (C)

The measurement of terminating call usage over CST2 and FGC to 800/800-type ends when the terminating CST2 or FGC entry switch receives an on-hook supervisory signal from the terminating end user's end office, indicating the terminating end user has disconnected, or from the customer's point of termination, whichever is recognized first by the entry switch. (C) (C) (T)

6. SWITCHED ACCESS SERVICE

6.7 RATE REGULATIONS
6.7.7 MEASURING ACCESS MINUTES (Cont'd)

D. CST3 and Feature Group D Usage Measurement

1. Originating Usage Measurement

a. Multifrequency Signaling

- For originating calls over CST3 and FGD, usage measurement begins when the originating CST3 or FGD entry switch receives the first wink supervisory signal forwarded from the customer's point of termination.

- The measurement of originating call usage over CST3 and FGD ends when the originating CST3 or FGD entry switch receives disconnect supervision from either the originating end user's end office, indicating the originating end user has disconnected, or the customer's point of termination, whichever is recognized first by the entry switch.

b. SS7 Out of Band Signaling

- For originating calls over CST3 or FGD, usage measurement on direct trunks begins when the CST3 or FGD entry switch sends an Initial Address Message (IAM). The usage measurement for trunks via an access tandem or customer- (C)
provided tandem switch begins when the CST3 or FGD entry switch receives (C)
an Exit Message (EXM).

- The measurement of originating call usage over CST3 or FGD with SS7 out of band signaling ends when a Release Message is sent or received by the originating end user's end office, whichever occurs first.

6. SWITCHED ACCESS SERVICE

6.7 RATE REGULATIONS
6.7.7 MEASURING ACCESS MINUTES

D. CST3 and Feature Group D Usage Measurement (Cont'd)

2. Terminating Usage Measurement

- For terminating calls over CST3 and FGD, the measurement of access minutes begins when the terminating CST3 or FGD entry switch receives answer supervision from the terminating end user's end office, indicating the terminating end user has answered.

- The measurement of terminating call usage over CST3 and FGD ends when the terminating CST3 or FGD entry switch receives disconnect supervision from either the terminating end user's end office, indicating the terminating end user has disconnected, or the customer's point of termination, whichever is recognized first by the entry switch.

E. Direct Inward Dial (*DID*) Switched Access Service

AVAILABLE IN ID (SPOKANE LATA), OR, WA ONLY

For originating calls over *DID* Switched Access Service, usage measurement begins when the originating *DID* switch receives an answer supervision signal forwarded from the customer's point of termination. This answer supervision signal must be provided by the customer's premises equipment upon receipt of the outpulsed *DID* telephone number from the *DID* switching office.

The measurement of originating call usage over *DID* ends when the originating *DID* switch receives an on-hook supervisory signal from either the originating end user's end office, indicating the originating end user has disconnected, or the customer's point of termination, whichever is recognized first.

6. SWITCHED ACCESS SERVICE

6.7 RATE REGULATIONS (Cont'd)

6.7.8 APPLICATION OF RATES FOR EXTENSION SERVICE

Lineside Switched Access Service is available with extensions, i.e., additional terminations of the service at different building(s) in the same or a different LATA. Lineside extensions within the LATA and same states are charged for under the Telephone Company's local and/or general exchange service tariffs. Lineside extensions in different LATAs, or in a different state in the same LATA, are charged for as Private Line Transport Service. The rate elements which apply are: A Voice Grade Channel Termination, Channel Mileage, if applicable, and signaling capability, if applicable. All appropriate monthly rates and nonrecurring charges set forth in Section 7, following, will apply. (T)
Such extensions are ordered as set forth in 5.2, preceding.

6.7.9 MESSAGE UNIT CREDIT

Calls from end users to the seven digit local telephone numbers associated with Lineside Switched Access Service may be subject to Telephone Company local and/or general exchange service tariff charges (including message unit and toll charges as applicable), as well as any other applicable charges for the Access Service. The monthly bills rendered to customers for their Lineside Switched Access Service for which Carrier Common Line rates apply will include a credit to reflect any message unit charges collected from their end users under the Telephone Company's local and/or general exchange service tariffs. The credit will apply for recorded originating usage or for assumed originating usage, as appropriate, for the Lineside service provided. When the credit is applied on assumed usage, such credit will not exceed the assumed levels of usage set forth in 6.7.7, preceding. No Message Unit Credit will apply for any terminating Lineside Access minutes. The Message Unit Credit for originating Lineside Access minutes is set forth in 6.8, following.

6. SWITCHED ACCESS SERVICE

6.7 RATE REGULATIONS (Cont'd)

6.7.10 LOCAL INFORMATION DELIVERY SERVICES

Calls over Switched Access in the terminating direction to certain community information services (e.g., 976) will be rated under the applicable rates for Switched Access Service as set forth in 6.8, following. In addition, non-access charges will also apply in accordance with the Information Provider's applicable service rates when the Company performs the billing function for that Information Provider.

6.7.11 MILEAGE MEASUREMENT

The mileage to be used to determine the Switched Transport rate for direct routed traffic via DTT is calculated on the airline distance between the end office switch, or the serving wire center of a Mobile Telephone Switching Office (MTSO), where the call originates or terminates and the customer's serving wire center. For tandem routed traffic, DTT is calculated from the access tandem to the customer’s serving wire center and TST is calculated on the airline distance between the end office switch, or the serving wire center of a MTSO, where the call originates or terminates and the access tandem. Exceptions for mileage measurement are as set forth in (A) through (H), following. The V & H coordinates method is used to determine mileage. This method is set forth in National Exchange Carrier Association, Inc. Tariff F.C.C. No. 4 for Wire Center Information (V & H coordinates). (C) (C)

Mileage is shown in terms of mileage bands as set forth in 6.8, following, in terms of mileage bands. To determine the rate to be billed, first compute the mileage, using the V & H coordinates method; then, find the band into which the computed mileage falls, and apply the rate shown for that band. If the calculation results in a fraction of a mile, always round up to the next whole mile before determining the mileage band and applying the rates.

6. SWITCHED ACCESS SERVICE

6.7 RATE REGULATIONS
6.7.11 MILEAGE MEASUREMENT (Cont'd)

Exceptions to the mileage measurement rules are as follows:

A. Mileage for Lineside Switched Access provided by DTT in the originating direction is calculated on an airline basis, using the V & H coordinates method, between the end office switch where the Lineside switching dial-tone is provided and the customer's serving wire center for the Switched Access Service provided.

Mileage for Lineside Switched Access provided by DTT in the terminating direction is calculated on an airline basis, using V & H coordinates method, between the end office switch where the Lineside switching dial-tone is provided and the customer's serving wire center when traffic is terminated in the dial-tone office or an end office without measurement capability. When traffic is terminated in an end office with measurement capability and is not the dial-tone office, Tandem Transmission rates are applicable as set forth in 6.7.1, preceding, and mileage will be calculated between the dial-tone office and the end office where the traffic terminates for the application of Tandem Transmission rates. The Tandem Transmission rates are in addition to the DTT rates.

(D)

6. SWITCHED ACCESS SERVICE

6.7 RATE REGULATIONS
6.7.11 MILEAGE MEASUREMENT (Cont'd)

B. When the customer orders access service via DTT to a host for access to a remote switching system or module (RSS or RSM), both DTT and Tandem Transmission rates apply as set forth in 6.7.1, preceding. Mileage for DTT is calculated on an airline basis between the SWC of the customer's premises or Company Hub, whichever is applicable, and the host office for the RSS or RSM. Mileage for Tandem Transmission is calculated between the host office and the RSS or RSM. (T)

When the customer orders TST from an access tandem to a host for access to a RSS or RSM, mileage for Tandem Transmission is calculated between the access tandem and the host office and then a second mileage measurement is calculated between the host office and the RSS or RSM. (T)

(D)

(D)

6. SWITCHED ACCESS SERVICE

6.7 RATE REGULATIONS
6.7.11 MILEAGE MEASUREMENT (Cont'd)

C. When the Switched Transport for Switched Access Service is provided by the Company and the end user connection is provided by a Commercial Mobile Radio Service provider, mileage for access is calculated on an airline basis, using the V & H Coordinate Method as set forth in this section based on tandem or direct routing. The serving wire center of the MTSO functions as the end office for mileage calculations. (T) | (T)

D. The mileage measurement portion of the DNAL will be calculated on an airline mile basis, using the V & H coordinates method, between the customer premises serving wire center and the Company central office where the DNAL terminates.

E. When jointly provisioned Switched Access is provided between the Company and another Exchange Telephone Company in conjunction with 800 DB Access Service and ANI cannot be identified, the Company and the other Exchange Telephone Company will mutually agree upon an end office designation to determine an existing end office that reflects the closest mileage measurement to the average Switched Transport miles. This end office designation can then be used for purposes of determining the appropriate mileage by using the V&H coordinate method. When the ANI can be determined, the originating end office will be used to determine the Switched Transport mileage.

F. When DTT Switched Transport facilities of different capacities or bandwidths are connected by a multiplexer at a Company Hub, mileage is determined using the V & H coordinates method. Mileage for DTT is measured separately from the serving wire center to the Company Hub where multiplexing occurs and then measured from the Company Hub to the end office.

G. When DTT is provided from the SWC to an access tandem in conjunction with TST to subtending end offices, the mileage is determined using the V & H coordinates method. Mileage for DTT is measured between the SWC and the access tandem and mileage for TST is measured from the access tandem to the end offices.

6. SWITCHED ACCESS SERVICE

6.7 RATE REGULATIONS (T)
6.7.11 MILEAGE MEASUREMENT (Cont'd) (T)

(D)

(D)

H. Mileage Measurement for Switched Transport connected to Expanded Interconnection-Collocation (EIC) Service is determined as follows: (T)

- If the EIC Service and the access tandem are in the same wire center building, the zero mileage band is used for the transport between the EIC Service and the access tandem. Mileage measurement for TST from the access tandem to subtending end offices not located in the same wire center building as the access tandem is calculated using the V&H coordinate method. If the subtending end office is in the same wire center building, a zero mileage band applies. (C) (C) (T) (T)

- Mileage measurement for DTT is calculated using the V&H coordinate method between the EIC Service wire center building and the access tandem when the EIC Service and access tandem are in different wire center buildings. (C)

- Mileage measurement for DTT between the EIC Service and the end office when the DTT connects to EIC Service in the same wire center building as the end office is a zero mileage band. When the end office is not located in the same wire center building, mileage measurement is calculated using the V&H coordinate method. (T) (T)

(D)

6. SWITCHED ACCESS SERVICE

6.7 RATE REGULATIONS (Cont'd)

6.7.12 SHARED USE

The regulations governing the provision of Shared Use facilities are set forth in 2.7, preceding.

6.7.13 PERCENT DIRECT ROUTED (PDR) FACTOR

When the customer orders Trunkside Switched Access Service, and the Company is unable to determine routing based on the call detail, the Company apportions usage between TST and DTT based on a state PDR factor. The PDR factor determines the percentage of traffic to be billed TST rates. DTT monthly rates will not be apportioned by the PDR factor.

The Company calculates the PDR factor in the following manner:

Step 1: The Company obtains the total billed usage for all Switched Access Services on a state-wide basis.

Step 2: The Company obtains the total billed usage for all Switched Access Services utilizing TST on a state-wide basis.

Step 3: The percentage of TST traffic is obtained by dividing the total TST billed usage obtained in Step 2 by the total billed usage in Step 1.

Step 4: The percentage in Step 3 is subtracted from 100 to determine the percentage of DTT traffic (PDR factor).

Step 5: The percentage in Step 3 is multiplied by the total number of access minutes that the Company was unable to determine routing for in that specific state.

This PDR factor will serve as the basis for billing until a revised PDR factor is calculated annually based on the previous year's usage. (T)

6. SWITCHED ACCESS SERVICE

6.7 RATE REGULATIONS (Cont'd)

6.7.14 DENSITY ZONE PRICING PLAN

A. General

The Density Zone Pricing Plan allows the Company pricing flexibility in states where an operational Switched Access Expanded Interconnection-Collocation Service (EIC) as set forth in Section 21, exists.[1]

The Density Zone Pricing Plan consists of Zones 1, 2 and 3. The Density Zone Pricing Plan applies to EF DS1 and DS3, DTT DS1 and DS3, EF DS1 to VG multiplexing, EF DS3 to DS1 multiplexing, DTT DS1 to VG multiplexing, DTT DS3 to DS1 multiplexing and DS1 to DS3 rollover rates and charges in states where an operational Expanded Interconnection Service exists. For those states where an operational Expanded Interconnection Service does not exist, Non-Plan rates are applicable.

For DTT DS1 and DTT DS3 and associated multiplexing equipment provisioned between a Company serving wire center in one zone and a Company Hub, tandem or end office wire center located in a different zone, the zone with the highest mileage rate is the applicable zone rate.

Density zones are designated by wire center in National Exchange Carrier Association, Inc., Tariff F. C. C. No. 4.

[1] The Density Zone Pricing Plan is applicable in the states of AZ, CO, IA, MN, NE, NM, OR, UT and WA. (C)

6. SWITCHED ACCESS SERVICE

6.7 RATE REGULATIONS (Cont'd)

6.7.15 SWITCHED TRANSPORT PRICING PLANS

Switched Transport Pricing Plans are available with certain services in some states when interconnectors have taken either 100 DS1-equivalent cross-connects for the transmission of Switched Access traffic in Zone 1 offices in a state or have taken an average of 25 DS1-equivalent cross-connects for the transmission of Switched Access traffic per Zone 1 office in a state.[1] (T)

Pricing Plans available for Switched Access Transport DS1 and DS3 ordered and provisioned from this section are described in A., following. When PLTS is ordered and provisioned under a Pricing Plan from Section 7, following, and the customer chooses to order Switched Access Service in conjunction with that PLTS Service, the Pricing Plan Shared Use regulations as described in B., following, are applicable. (T) (T)

A. Switched Transport DS1 and DS3 Pricing Plans

A Pricing Plan allows a customer to integrate digital services into their network with the assurance that Company-initiated increases in monthly rates during the fixed period plan will not occur. (T)

DS1 or DS3 EF, DS1 or DS3 DTT facilities and/or DS3 to DS1 or DS1 to Voice Grade CO Multiplexing optional features may be ordered at the customer's option on a month-to-month basis or under a Pricing Plan for a fixed period of time.

The customer must specify the length of the Pricing Plan fixed period at the time the initial service is ordered. The fixed periods for an EF, DTT facility and associated CO Multiplexing may be different. The minimum period a customer must have for any Pricing Plan is twelve months.

[1] Pricing Plans are available in the states of AZ, CO, IA, MN, NE, NM, OR, UT and WA. Pricing Plans are not available for DID Service. (T)

6. SWITCHED ACCESS SERVICE

6.7 RATE REGULATIONS
6.7.15 SWITCHED TRANSPORT PRICING PLANS

A. Switched Transport DS1 and DS3 Pricing Plans (Cont'd)

The following fixed periods are available for Switched Transport DS1 and DS3 Pricing Plans: (T)

- For DS1 EF or DS1 DTT, the customer's Pricing Plan fixed period is available in thirty-six (36) or sixty (60) month increments.

- For DS3 EF, electrical interface capacity of one, or DS3 DTT, the customer's Pricing Plan fixed period is available in thirty-six (36) and sixty (60) month increments.

- DS3 EF electrical or optical interface capacities of two or greater can only be ordered and provisioned from Section 7, following. The Switched Access Service rate for the Electrical or Optical Entrance Facility as set forth in 6.8.1, following, is for the billing of Shared Use only. Shared use regulations for Pricing Plans are set forth in B., following.

- For Switched Transport CO Multiplexing requested at the same time as its associated EF or DTT facility, the multiplexing Pricing Plan fixed period must be equal to the associated EF or DTT fixed period or less than the associated EF or DTT fixed period, respectively. If Switched Transport CO Multiplexing is ordered subsequent to the EF or DTT facility, the multiplexing feature will be assessed only on a month-to-month basis. (T)

(D)

Certain material found on this page formerly appeared on Page 6-224.4.

6. SWITCHED ACCESS SERVICE

6.7 RATE REGULATIONS
6.7.15 SWITCHED TRANSPORT PRICING PLANS

A. Switched Transport DS1 and DS3 Pricing Plans (Cont'd)

No Company-initiated increases to Pricing Plan monthly rates shall occur during the customer's fixed period. Effective September 1, 1998, customers establishing a Pricing Plan will not receive a rate decrease if the Company decreases rates during the term of the plan. Pricing Plans established on or before August 31, 1998, will automatically receive a rate decrease if the Company decreases rates during the term of the plan.

At the end of a Pricing Plan fixed period, the customer may convert to month-to-month rates or subscribe to a new Pricing Plan fixed period. The new Pricing Plan monthly rates will be adjusted to those in effect at the time of the new Pricing Plan fixed period. Should the customer not make a choice by the end of a Pricing Plan fixed period, the Company will automatically revert the customer to current month-to-month rates.

The Termination Liability and Waiver Policy as set forth in C. and D., following, will be in effect for all customers subscribing to a Switched Transport Pricing Plan. When Switched Transport is provided in conjunction with a PLTS facility, the PLTS Termination Liability and Waiver Policy as set forth in 7.1.8, following, shall be in effect. When PLTS Termination Liability charges are appropriate, Switched Transport Termination Liability charges are not assessed. (T)

Switched Transport DS1 or DS3 Pricing Plans may be converted to Partnership Program as set forth in 7.1.3, following. (T)

6. SWITCHED ACCESS SERVICE

6.7 RATE REGULATIONS
6.7.15 SWITCHED TRANSPORT PRICING PLANS (Cont'd)

B. Pricing Plan Shared Use Regulations

When the customer's Switched Access Service is provided on a portion of the capacity of a PLTS facility under a PLTS Pricing Plan, the Shared Use billing will be apportioned as described in 2.7, preceding. The following conditions are in addition to the Shared Use regulations. (T)

Pricing Plans established for PLTS are not always available for Switched Services in all states[1]. When the customer has an existing PLTS Pricing Plan in a state where Switched Transport Pricing Plans are not available, the appropriate non-plan (month-to-month) Switched Transport rate element shall be apportioned in lieu of a Pricing Plan rate.

The Company shall bill Switched Transport Pricing Plan rate elements at the same capacity level as the PLTS Pricing Plan rate elements for the same duration of time remaining on the Shared Use PLTS Pricing Plan fixed period. When Switched Transport rate elements at the same capacity level (e.g., SST or SRS) are not available, the Company shall utilize a Switched DS3 Pricing Plan rate element for the billing of Switched Access. All exceptions are described under the Shared Use regulations as described in 2.7, preceding.

The Switched Transport Pricing Plan minimum period will be for the same duration of remaining months on the Shared Use PLTS Pricing Plan fixed period.

When the customer migrates Switched Access Service to a Shared Use PLTS facility, the Company shall establish the Switched Access rate elements using current pricing plan tariff rates in effect at the time the request is completed. (T)

[1] Pricing Plans are applicable in the states of AZ, CO, IA, MN, NE, NM, OR, UT and WA. Pricing Plans are not available for DID Service.

Certain material previously found on this page can now be found on Page 6-224.6.

6. SWITCHED ACCESS SERVICE

6.7 RATE REGULATIONS
6.7.15 SWITCHED TRANSPORT PRICING PLANS

B. Pricing Plan Shared Use Regulations (Cont'd)

In the event the customer discontinues the PLTS Pricing Plan and the PLTS facilities remain in-service, the Company will discontinue the Switched Transport Pricing Plan. The Company will revert the Switched Transport rate elements to current month-to-month billing.

When Switched Transport is provided in conjunction with a PLTS facility, the PLTS Termination Liability and Waiver Policy as set forth in 7.1.8, following, shall be in effect. When PLTS Termination Liability charges are appropriate, Switched Transport Termination Liability charges are not assessed. (T)

6. SWITCHED ACCESS SERVICE

6.7 RATE REGULATIONS
6.7.15 SWITCHED TRANSPORT PRICING PLANS (Cont'd)

C. Switched Transport Pricing Plan Termination Liability[1]

The Termination Liability Policy provides the liability terms and conditions for customers subscribing to Switched Transport Pricing Plans.

If a customer chooses to discontinue the entire Pricing Plan service or a portion of the services in a Pricing Plan, termination charges apply (unless the customer satisfies the conditions specified in the Waiver Policy as set forth in D., following).

Termination charges are determined based on the status of the twelve (12) month Pricing Plan minimum period requirement as set forth following:

- Should the customer choose to discontinue the Pricing Plan prior to completion of the twelve (12) month minimum period, termination charges equal to one-hundred percent (100%) of the total Pricing Plan monthly charges for the remaining months of the minimum period apply. In addition to the 100% minimum period termination charge, forty percent (40%) for a DS1 Pricing Plan or seventy percent (70%) for a DS3 Pricing Plan based on the total current tariff Pricing Plan monthly rates will apply for the remaining portion of the Pricing Plan fixed period. For example, if a customer discontinues after completing 8 months of a 36 month Pricing Plan, the termination charge will be the total Pricing Plan monthly charges multiplied by 100% for the remaining 4 months of (T)
  the minimum period requirement then, the total Pricing Plan monthly charge (T)
  based on current tariff rates is multiplied by either 40% or 70% for the remaining 24 months of the fixed period.

- Should the customer choose to discontinue the Pricing Plan after the completion of the twelve (12) month minimum period, termination charges equal to 40% for a DS1 Pricing Plan or 70% for a DS3 Pricing Plan based on the total current tariff Pricing Plan monthly rates will apply for the remaining portion of the (T)
  Pricing Plan fixed period. For example, if a customer discontinues after completing 17 months of a 36 month Pricing Plan, the termination charge will be the total Pricing Plan monthly charges based on current tariff rates multiplied (T)
  by either 40% or 70%, multiplied by the remaining 19 months of the fixed period.

[1] Switched Transport DS1 or DS3 Pricing Plans in service prior to August 12, 1997, will retain the 15% Termination Liability application for the duration of the existing fixed period only.

6. SWITCHED ACCESS SERVICE

6.7 RATE REGULATIONS
6.7.15 SWITCHED TRANSPORT PRICING PLANS (Cont'd)

D. Switched Transport Pricing Plan Waiver Policy (N)

A waiver of the Pricing Plan Termination Liability charge as set forth in C., preceding, may occur when the customer moves to a different location within the same state, upgrades to a new fixed period Pricing Plan or upgrades the Pricing Plan to DS3 capacity and the following conditions are met:

- The transport service between the customer's premises and the serving wire center and/or Hub (e.g., Switched Transport EF or PLTS Channel Termination and/or associated Switched Transport or PLTS and/or mileage multiplexing) is provided by the Company.

- The customer must agree to a new Pricing Plan for the new service and a new minimum period will apply.

- The customer must satisfy the existing Pricing Plan minimum period. Should the customer choose to discontinue the Pricing Plan fixed period service prior to completion of the minimum period, termination charges equal to one-hundred percent (100%) of the total Pricing Plan monthly charges for the remaining months of the minimum period will apply.

- The total value of the new Pricing Plan service must be equal to or greater than 115% of the remaining value of the existing Pricing Plan service (Nonrecurring charges and Special Construction charges will not be used for the Waiver calculation).

- The order to disconnect the existing Pricing Plan service and the order for the new Pricing Plan service are received by the Company at the same time and both orders must reference the application of the Switched Transport Pricing Plan Waiver Policy.

- The new fixed period must meet or exceed the fixed period being upgraded. The monthly rates will be those that are in effect at the time the service is upgraded (e.g., a 36 month fixed period may be upgraded to a new 36 month, or longer fixed period). (N)

6. SWITCHED ACCESS SERVICE

6.7 RATE REGULATIONS
6.7.15 SWITCHED TRANSPORT PRICING PLANS (Cont'd)

E. Non appropriations Clause

Termination charges do not apply to Pricing Plan fixed period services purchased by Local, State or Federal government entities or to customers who have purchased services solely for resale to Local, State or Federal government entities when the Non appropriations Clause terms and conditions, as described in 7.1.8, following, are met. (T)

6. SWITCHED ACCESS SERVICE

6.7 RATE REGULATIONS
6.7.15 SWITCHED TRANSPORT PRICING PLANS (Cont'd)

F. Pricing Plan Nonrecurring Charge Reduction

1. General[1]

When the customer's Switched Transport is under a Switched Transport Pricing Plan (e.g., DS1 or DS3) or Commitment Program or is provided on a PLTS Shared Use facility under a PLTS Pricing Plan (e.g., DS1 or DS3), RCP or Partnership Program, a nonrecurring charge (NRC) reduction may apply. Switched Transport nonrecurring charges associated with a thirty-six month (36) Switched Transport or Shared Use PLTS fixed period will be reduced twenty-five percent (25%) when the access order is received within 90 days of the fixed period establishment date. Switched Transport nonrecurring charges associated with a sixty month (60) Switched Transport fixed period or any fixed period of a Shared Use PLTS Pricing Plan, RCP or Partnership Program of longer duration than 36 months will be reduced fifty percent (50%) when the access order is received within 180 days of the fixed period establishment date. (T) (T) (C) (C)

For Switched Access Service ordered from Section 6, the Company will use the Switched Transport Pricing Plan establishment date as the beginning date through day 90 or day 180, respectively, to determine the NRC reduction eligibility. For Switched Access provisioned as Shared Use on PLTS Service, the Company will use the PLTS Pricing Plan establishment date as the beginning date through day 90 or day 180, respectively, to determine the NRC reduction eligibility. Nonrecurring charges on access orders received after day 90 or day 180 from the establishment date of the fixed period (i.e., Switched or PLTS) will not be reduced.

A NRC reduction may be applied to Switched Access Service work activities for installation of service, service rearrangements, rollovers and moves. Nonrecurring charges for work activities performed at the line group, trunk group, end office or tandem level or for 500 Access Service (6.8.2.F), 900 Access Service (6.8.6), Dedicated Network Access Link (6.8.1.F), Direct Inward Dial (6.8.2.C), Switched Data Service (6.8.7) and CCSAC (20.8) are not eligible for a NRC reduction.

In addition to the conditions described preceding, Switched Access Service nonrecurring charges, as set forth in 6.8, following, will be reduced when the conditions in 2. through 4., following, are met.

[1] The Switched Transport Pricing Plan NRC reduction is applicable in the states of AZ, CO, IA, MN, NE, NM, OR, UT and WA.

6. SWITCHED ACCESS SERVICE

6.7 RATE REGULATIONS
6.7.15 SWITCHED TRANSPORT PRICING PLANS (T)

F. Pricing Plan Nonrecurring Charge Reduction (Cont'd) (T)

2. Line or Trunk Work Activity (N)

When the Switched Access Service work activity is at the line or trunk level for installation of service, service rearrangements, rollovers and moves, the customer of record for the line or trunk and the customer of record for the Company-provided facility the line or trunk is provisioned on must be the same customer. The NRC reduction eligibility is based on the following conditions:

- When the Company provisions the transport facility as one facility between the customer's premises and the Company HUB, access tandem or end office, the Company will use the customer's Switched Transport EF pricing plan fixed period or the Shared Use PLTS pricing plan fixed period between the customer's premises and the serving wire center of the customer's premises to determine the NRC reduction eligibility.

- When the Company provisions the transport facility as two facilities between the customer's premises and the Company HUB, access tandem, end office, HUB to access tandem or HUB to end office, the Company will determine the NRC reduction eligibility based on the pricing plan fixed period of the connecting facility assignment for the line or trunk. (e.g., if the DTT facility between the serving wire center and the HUB has a pricing plan, that pricing plan will be used to determine the NRC reduction eligibility for the lines or trunks on that facility. If the DTT facility does not have a pricing plan, a NRC reduction does not apply at the line or trunk level).

- When the customer has a line group or trunk group provisioned on multiple Switched Transport or Shared Use PLTS facilities between the customer's premises and the Company HUB, access tandem or end office, the Company will determine the NRC reduction eligibility based on the pricing plan fixed period of each connecting facility assignment (e.g., trunks 1-24 of a 48 member trunk group provisioned on a connecting facility assignment without a pricing plan would not be eligible for a NRC reduction while trunks 25-48 of a 48 member trunk group provisioned on another connecting facility assignment with a thirty-six or sixty month pricing plan may be eligible for a NRC reduction).

3. Facility Work Activity

When Switched Access Service work activity is at the facility level for installation of service, service rearrangements, rollovers and moves, the NRC reduction eligibility is based on the pricing plan fixed period of the facility. (N)

6. SWITCHED ACCESS SERVICE

6.7 RATE REGULATIONS (Cont'd)

6.7.16 SWITCHED TRANSPORT COMMITMENT PROGRAM

A. Description

Customers may participate in the DS1 Switched Transport Commitment Program when interconnectors have taken either 100 DS1-equivalent cross-connects for the transmission of Switched Access traffic in Zone 1 offices in a state or have taken an average of 25 DS1-equivalent cross-connects for the transmission of Switched Access traffic per Zone 1 office in a state.[1]

The DS1 Switched Transport Commitment Program is an optional program that allows Switched Access Service customers to receive a reduced price in the form of a credit for committing to a quantity level of DS1 Switched Transport Entrance Facilities (EF) from the customer's premises to the Company serving wire center (excluding CCSAC Service) for a forty-eight (48) month commitment period by state.

During the commitment period of 48 months, the customer's DS1 Switched Transport EFs may be moved anywhere within the same state without incurring Termination Liability. All applicable nonrecurring charges for the move will apply. When moving, the customer must place the disconnect order and the order for new service at the same time. Each order must reference the application of the Switched Transport Commitment Program.

In the event the customer's total in-service DS1 Switched Transport EFs fall below the commitment level, the Company will calculate a shortfall as determined in 3., following.

To establish a DS1 Switched Transport Commitment Program, the customer must commit a percentage in a whole number from seventy percent (70%) to one hundred percent (100%) of their total in-service DS1 Switched Transport EFs by state. The customer's commitment level (expressed in quantity of whole numbered DS1 EFs) will remain in effect for the duration of the forty-eight month term, unless adjusted as set forth in 3., following.

[1] DS1 Switched Transport Commitment Program is applicable in the states of AZ, CO, IA, MN, NE, NM, OR[2], UT and WA[2]. (C)

[2] DS1 Switched Transport Commitment Program is not applicable to DID Service.

6. SWITCHED ACCESS SERVICE

6.7 RATE REGULATIONS
6.7.16 SWITCHED TRANSPORT COMMITMENT PROGRAM

A. Description (Cont'd) (T)

If the customer has a DS1 Switched Transport Pricing Plan in the same state where the customer has requested a DS1 Switched Transport Commitment Program, the customer must convert all DS1 Switched Transport Pricing Plans and all month-to-month DS1 Switched Transport rate elements (excluding CCSAC) to the DS1 Switched Transport Commitment Program for that state. Termination Liability as set forth in 6.7.15, preceding, will not apply for those services converted to the Switched Transport Commitment Program. Only one DS1 Switched Transport Commitment Program can be in effect for a customer by state. The customer will be billed current month-to-month rate elements and will receive the DS1 Switched Transport Commitment Program credit or shortfall on the next month's billing. The minimum period for the DS1 Switched Transport Commitment Program is twelve months. (N)

To establish a DS1 Switched Transport Commitment Program (or to change the DS1 Switched Transport commitment level as set forth in 3., following) the Company must receive the customer's commitment program order by the close of business on the 27th day of the month in order for the commitment period to be effective on the first bill period of the following month.

At the end of the 48 month term, the DS1 Switched Transport Commitment Program may be converted to a new 48 month term. The customer must enroll in a new DS1 Switched Transport Commitment Program by the close of business on the 27th day of the 47th month of the existing term in order for the existing program to be converted to a new 48 month term without a lapse in the credit. If the customer does not enroll in a new term, the Company will continue to bill month-to-month rates and will discontinue the DS1 Switched Transport Commitment Program calculation.

Each month the Company will compare the customer's 48 month DS1 EF commitment level to the total number of in-service DS1 Switched Transport EFs, by state, to determine if a credit or shortfall is applicable. Once the application of a credit or shortfall is determined the Company will calculate the customer's DS1 Switched Transport Commitment Program monthly billing. (N)

6. SWITCHED ACCESS SERVICE

6.7 RATE REGULATIONS
6.7.16 SWITCHED TRANSPORT COMMITMENT PROGRAM

A. Description (Cont'd)

1. Credit Calculation (N)

The Switched Transport Commitment Program credit is determined as follows:

a. divide the total DS1 Switched Transport monthly recurring dollars billed (excluding CCSAC Service) in a state by the total number of in-service DS1 Switched Transport EFs (ordered from Section 6) in the same state to arrive at an average price, then

b. multiply the average price times the total in-service DS1 Switched Transport EF commitment level (expressed in quantity of whole number DS1 EFs) in the same state, then

c. multiply the result of b., preceding by 20% to equal the credit amount. All DS1 Switched Transport recurring rate elements (excluding CCSAC) are included in the DS1 Switched Transport Commitment Program calculation.

The credit will be applied by state on the customer's next months billing. Order activity involving moves, additions, changes or deletions, may cause the credit and or shortfall charge as set forth in 2, following, not to appear on the customer's immediate next month's billing after order completion. Previous DS1 Switched Transport Commitment Program monthly billing totals will not be recalculated for this type of order activity. Fractional charges will be reflected on the next month's billing.

2. Shortfall Calculation

For each month the in-service DS1 Switched Transport EFs fall below the DS1 Switched Transport EF commitment level (expressed in quantity of DS1 EFs), the customer will be charged a shortfall on their next month's billing. If a customer's shortfall is due to Company reasons (e.g., a sale of serving wire centers or exchanges), a shortfall charge will not apply.

a. The Company will determine the average price as set forth in 1., preceding, then

b. multiply the average price times the difference between the DS1 Switched Transport EF commitment level (expressed in quantity of DS1 EFs) and the actual in-service DS1 Switched Transport EFs for a given state to derive the shortfall.

The shortfall charge will be applied by state on the customer's next month's billing. (N)

6. SWITCHED ACCESS SERVICE

6.7 RATE REGULATIONS
6.7.16 SWITCHED TRANSPORT COMMITMENT PROGRAM

A. Description (Cont'd)

3. Adjusting the Commitment Level (N)

a. Increasing the Commitment Level

The DS1 Switched Transport EF commitment level by state may be increased. The customer must request the increase in writing (by certified U.S. Mail return receipt requested). An increase request in the commitment level received by the close of business on the 27th of the month will be effective the first bill period of the following month. An increase in the commitment level will not change the expiration date of the DS1 Switched Transport Commitment Program.

b. Decreasing the Commitment Level

The state DS1 Switched Transport EF commitment level may be decreased. The customer must notify the Company in writing (by certified U.S. mail return receipt requested). A decrease request in the commitment level received by the close of business on the 27th of the month will be effective the first bill period of the following month. A decrease in the commitment level will not change the expiration date of the DS1 Switched Transport Commitment Program. The Company will compare the decrease request to the initial total in-service Switched Transport EFs to determine if the decrease request is below the initial 70% commitment level requirement. If the decrease request is below the initial 70% requirement, the Commitment Program will be discontinued and Termination Liability charges will apply as set forth in B., following.

Customers may upgrade to a Switched Transport DS3 Pricing Plan without incurring Termination Liability as set forth in the Waiver Policy in C., following. In addition, the initial Switched Transport DS1 EF commitment level and initial total in-service Switched Transport DS1 EFs may be decreased by the number of DS1 Switched Transport EFs migrated to a Switched Transport DS3 Entrance Facility.

If the decrease is due to Company reasons (e.g., a sale of serving wire centers or exchanges), Termination Liability will not apply. (N)

6. SWITCHED ACCESS SERVICE

6.7 RATE REGULATIONS
6.7.16 SWITCHED TRANSPORT COMMITMENT PROGRAM (Cont'd)

B. Termination Liability[1] (C)

When a customer chooses to discontinue the entire Switched Transport Commitment Program before the 48 month expiration date, decrease the commitment level below the 70% minimum requirement or migrate to other Section 6 Switched Access Services, Termination Liability charges apply (unless the customer satisfies the conditions specified in the Waiver Policy as set forth in C., following).

Termination charges are determined based on the status of the twelve month minimum period requirement as set forth in 1. and 2., following:

1. Should the customer choose to discontinue the Switched Transport Commitment Program prior to completion of the twelve month minimum period, termination charges equal to one-hundred percent (100%) of the total DS1 Switched Transport current monthly charges for the remaining months of the minimum period apply. In addition, forty percent (40%) of the total DS1 Switched Transport current (C) monthly charges for the remaining months of the Switched Transport Commitment Program term will apply (e.g., if a customer discontinues after completing 8 months of a 48 month term, the termination charge will be the total DS1 Switched Transport current monthly charges multiplied by 100% for the remaining 4 months of the minimum period requirement then, the total DS1 Switched Transport current monthly charges multiplied by 40% for the remaining (C) 36 months of the term).

2. Should the customer choose to discontinue the Switched Transport Commitment Program after the completion of the twelve month minimum period, termination charges equal to forty percent (40%) of the total DS1 Switched Transport current (C) monthly charges for the remaining portion of the term will apply (e.g., if a customer discontinues after completing 20 months of a 48 month term, the termination charge will be the total DS1 Switched Transport current monthly charges multiplied by 40%, multiplied by the remaining 28 months of the term). (C)

[1] Switched Transport Commitment Programs in service prior to August 12, 1997, (N) will retain the 15% Termination Liability application for the duration of the existing fixed period only. (N)

6. SWITCHED ACCESS SERVICE

6.7 RATE REGULATIONS
6.7.16 SWITCHED TRANSPORT COMMITMENT PROGRAM (Cont'd) (T)

C. Waiver Policy (N)

A waiver of the Switched Transport Commitment Program Termination Liability charge as set forth in B., preceding, may occur when the customer upgrades to a Switched Transport DS3 Pricing Plan and the following conditions are met:

- The transport service between the customer's premises and the serving wire center and/or Hub (e.g., Switched Transport EF, or PLTS Channel Termination and/or associated Switched Transport or PLTS mileage and/or multiplexing) is provided by the Company.

- a new minimum period applies to the new Switched Transport DS3 Pricing Plan or PLTS DS3 Pricing Plan.

- The customer must satisfy the existing twelve month minimum period of the Switched Transport Commitment Program. Should the customer choose to discontinue the Switched Transport Commitment Program prior to completion of the twelve month minimum period, Termination Liability charges equal to one-hundred percent (100%) of the total DS1 Switched Transport current monthly charges for the remaining months of the minimum period will apply.

- The order to disconnect the existing Switched Transport Commitment Program DS1 service and the order for the new Switched Transport DS3 Pricing Plan service are received by the Company at the same time and both orders must reference the application of the Switched Transport Commitment Program Waiver Policy. (N)

6. SWITCHED ACCESS SERVICE

6.7 RATE REGULATIONS

6.7.16 SWITCHED TRANSPORT COMMITMENT PROGRAM (T)

C. Waiver Policy (Cont'd) (T)

- The total value of the new Switched Transport DS3 Pricing Plan service must be equal to or greater than 115% of the remaining value of the existing Switched Transport Commitment Program (nonrecurring charges and Special Construction charges will not be used for the Waiver calculation). To determine the remaining dollar value of the DS1 Switched Transport Commitment Program, the calculation is determined as follows: (N)

a. multiply the number of decreased DS1 Switched Transport EFs by the average price as set forth in A.1., preceding (e.g., a decrease of 100 DS1 Switched Transport EFs multiplied by the average price of $200.00 = $20,000.00)

b. multiply a., preceding by the number of months remaining in the DS1 Switched Transport Commitment Program. (e.g., $20,000.00 multiplied by 10 months),

c. multiply the answer from b., preceding, by the Waiver Policy % (e.g., $200,000 multiplied by 115%) and

d. the dollar value of the new service must be equal to or greater than the answer derived in c, preceding, to waive the Termination Liability (e.g., the new service dollar value must be equal to or greater than $230,000.00).

In addition, the remaining DS1 Switched Transport EF commitment level may be decreased by the number of DS1 Switched Transport EFs migrated to Switched Transport DS3 facilities, at the customer's request, without incurring Termination Liability. (N)

6. SWITCHED ACCESS SERVICE

6.7 RATE REGULATIONS
6.7.16 SWITCHED TRANSPORT COMMITMENT PROGRAM (Cont'd)

D. Commitment Program Nonrecurring Charge Reduction

1. General[1]

When the customer's DS1 Switched Transport is under a DS1 Switched Transport Commitment Program a nonrecurring charge reduction may apply. DS1 Switched Transport nonrecurring charges associated with a forty-eight month (48) commitment term will be reduced fifty percent (50%) when the access order is received within 180 days of the commitment establishment date.

When the customer has DS1 Switched Transport ordered from Section 6 on a Switched Transport Commitment Program and has Switched Access Service provisioned as Shared Use on PLTS DS1 Service under a RCP, the Company will use the Switched Transport Commitment Program establishment date as the beginning date through day 180 to determine the NRC reduction eligibility by state. Nonrecurring charges on access orders received after day 180 from the establishment date of the Switched Transport Commitment program will not be reduced.

A NRC reduction may be applied to DS1 Switched Access Service work activities for installation of service, service rearrangements, rollovers and moves. Nonrecurring charges for work activities performed at the line group, trunk group, end office or tandem level or for 500 Access Service (6.8.2.F), 900 Access Service (6.8.6), Dedicated Network Access Link (6.8.1.F), Direct Inward Dial (6.8.2.C) Switched Data Service (6.8.7) and CCSAC (20.8) are not eligible for a NRC reduction.

In addition to the conditions described preceding, Switched Access Service nonrecurring charges, as set forth in 6.8, following, will be reduced when the following conditions in 2., through 3., following, are met.

[1] The Switched Transport Commitment Program NRC reduction is applicable in the states of AZ, CO, IA, MN, NE, NM, OR, UT and WA. (C)

6. SWITCHED ACCESS SERVICE

6.7 RATE REGULATIONS
6.7.16 SWITCHED TRANSPORT COMMITMENT PROGRAM

D. Commitment Program Nonrecurring Charge Reduction (Cont'd)

2. Line or Trunk Work Activity

When the Switched Access Service work activity is at the line or trunk level for installation of service, service rearrangements, rollovers and moves, the customer of record for the line or trunk and the customer of record for the Company-provided DS1 facility the line or trunk is provisioned on must be the same customer. The Company will use the customer's Switched Transport Commitment Program term establishment date to determine the NRC reduction eligibility.

3. Facility Work Activity

When Switched Access Service work activity is at the DS1 facility level for installation of service, service rearrangements, rollovers and moves, the Company will use the customer's Switched Transport Commitment Program term establishment date to determine the NRC reduction eligibility.

E. Converting STCP to Partnership Program

At the customer’s option, the customer’s STCP DS1 EFs may be converted to Partnership Program at the time the customer establishes Partnership Program as set forth in 7.1.3, following. Switched Transport month-to-month rate elements (T)
currently in effect as of the establishment date of the Partnership Program will be used for the Partnership Program calculation. The STCP commitment level will be decreased for each in-service STCP DS1 EF converted to Partnership Program within a LATA in the same state as the STCP. Termination Liability will not apply for those services converted to Partnership Program. A new minimum period of twelve (12) months applies. The commitment level and credit calculation for Partnership Program are set forth in 7.1.3, following. (T)

6. SWITCHED ACCESS SERVICE

6.7 RATE REGULATIONS

6.7.17 PARTNERSHIP PROGRAM

Switched Transport DS1 and DS3 provided on a portion of the capacity of a Shared Use PLTS facility are included in the Partnership Program when the PLTS facility has been enrolled in a Partnership Program. At the customer's option, Switched Transport DS1 and DS3 provided as non-shared (i.e., a facility provisioned as 100% Switched Transport without any PLTS provisioning) may also be included in the Partnership Program. The terms and conditions set forth in 7.1.3, following, and the conditions described below must be met in order for Switched Transport DS1 and DS3 rate elements to be included under the Partnership Program: (T)

- Interconnectors have taken either 100 DS1-equivalent cross-connects for the transmission of Switched Access traffic in Zone 1 offices in a state or have taken an average of 25 DS1-equivalent cross-connects for the transmission of Switched Access traffic per Zone 1 office in a state.[1]

- The Switched Transport DS1 and DS3 rate elements will bill as month-to-month rate elements for the same duration of time remaining on the Partnership Program fixed period.

- The Switched Transport DS1 and DS3 rate elements will have the same minimum period as remaining on the Partnership Program.

- The Switched Transport DS1 and DS3 rate elements can not participate in any other pricing plan option or STCP in the same LATA as the Partnership Program except as set forth in 7.1.3, following. (T)

- A Nonrecurring Charge Reduction for Pricing Plans as set forth in 6.7.15.F., preceding, is available to customers when Switched Access is associated with the customer's Partnership Program.

[1] Partnership Program is available for Switched Access Service in the states of AZ,CO, IA, MN, NE, NM, OR, UT and WA.

6. SWITCHED ACCESS SERVICE

6.8 RATES AND CHARGES

6.8.1 SWITCHED TRANSPORT

A. Entrance Facility

1. Voice Grade - Electrical Interface, per point of termination

USOC	NONRECURRING CHARGE	MONTHLY RATE
EF2AX	$99.00	$48.06 (I)

6. SWITCHED ACCESS SERVICE

6.8 RATES AND CHARGES
6.8.1 SWITCHED TRANSPORT

A. Entrance Facility (Cont'd)

2. DS1 - Electrical Interface

a. per point of termination, per fixed period

USOC

- Monthly - Per DS1 EF2BX
- 36 Months - Per DS1 EF2BX
- 60 Months - Per DS1 EF2BX

NONRECURRING CHARGE[1]

	NON-PLAN	ZONE 1	ZONE 2	ZONE 3
- Per DS1	$313.25	$313.25	$313.25	$313.25

MONTHLY RATE[1]

	NON-PLAN	ZONE 1	ZONE 2	ZONE 3	
- Monthly	$108.44(R)	$ 99.77(R)	$108.44(R)	$117.12(R)	
- 36 Mos.	–	91.09(R)	99.77(R)	108.44 (R)	(T)
Vintage[2]		105.00	115.00		(N)
Vintage[3]				125.00	(N)
Vintage[4]				109.01	(T)
- 60 Mos.	–	79.80(R)	86.76(R)	93.69(R)	(T)
Vintage[5]		92.00			(N)
Vintage[2]			100.00	108.00	(N)
Vintage[6]			95.00		(T)

[1] Rates and charges for Non-Plan and Zones 1, 2 and 3 apply as set forth in 6.7.14.

[2] Vintage rate in effect 7/1/98 through 6/30/00. (N)
[3] Vintage rate in effect 10/19/98 through 6/30/00. (N)
[4] Vintage rate in effect 7/5/96 through 10/18/98. (T)
[5] Vintage rate in effect 7/5/96 through 6/30/00. (N)
[6] Vintage rate in effect 6/5/96 through 6/30/98. (T)

6. SWITCHED ACCESS SERVICE

6.8 RATES AND CHARGES
6.8.1 SWITCHED TRANSPORT

A. Entrance Facility (Cont'd)

3. DS3 - Electrical Interface

a. per point of termination (T)

	USOC	
• Monthly - Per DS3	EF2CX	
• 12 Months - Per DS3[2]	EF2CX	
• 24 Months - Per DS3[2]	EF2CX	
• 36 Months - Per DS3[3]	EF2CX	(T)
• 60 Months - Per DS3[3]	EF2CX	(T)
• 120 Months - Per DS3[2]	EF2CX	

NONRECURRING CHARGE[1]

	NON-PLAN	ZONE 1	ZONE 2	ZONE 3
- Per DS3	$313.25	$313.25	$313.25	$313.25

[1] Rates and charges for Non-Plan and Zones 1, 2 and 3 apply as set forth in 6.7.14, preceding. (T)

[2] 12, 24 and 120 Mos. rate elements are for the billing of Shared Use only.

[3] 36 and 60 Mos. rate elements are applied as set forth in 6.7.15, preceding. (N)

Certain material previously found on this page can now be found on Page 225.2.1.

6. SWITCHED ACCESS SERVICE

6.8 RATES AND CHARGES
6.8.1 SWITCHED TRANSPORT

A.3.a. (Cont'd)

MONTHLY RATE[1][2][3]
(DS3 Electrical Interface)

	NON-PLAN	ZONE 1	ZONE 2	ZONE 3	
- Monthly	$1,203.92(R)	$1,203.92(R)	$1,203.92(R)	$1,203.92(R)	
- 12 Mos.	–	1,167.81(R)	1,167.81(R)	1,167.81(R)	(T)
Vintage[4]		1,455.00	1,455.00	1,455.00	(N)
Vintage[5]		1,310.00	1,310.00	1,310.00	(T)
- 24 Mos.	–	1,143.70(R)	1,143.78(R)	1,143.73(R)	(T)
Vintage[4]		1,425.00	1,425.00	1,425.00	(N)
Vintage[5]		1,269.00	1,269.00	1,269.00	(T)
- 36 Mos.	–	1,083.52(R)	1,083.53 (R)	1,083.52(R)	(T)
Vintage[4]		1,350.00	1,350.00	1,350.00	(N)
Vintage[5]		1,215.00	1,215.00	1,215.00	(T)
- 60 Mos.	–	963.14(R)	963.14(R)	963.14(R)	(T)
Vintage[4]		1,200.00	1,200.00	1,200.00	(N)
Vintage[5]		1,080.00	1,080.00	1,080.00	(T)
- 120 Mos.	–	963.17(R)	963.14(R)	963.14(R)	(T)
Vintage[4]		1,200.00	1,200.00	1,200.00	(N)
Vintage[5]		1,080.00	1,080.00	1,080.00	(T)

[1] Rates and charges for Non-Plan and Zones 1, 2 and 3 apply as set forth in 6.7.14, preceding.
[2] 12, 24 and 120 Mos. rate elements are for the billing of Shared Use only.
[3] 36 and 60 Mos. rate elements are applied as set forth in 6.7.15, preceding.

[4] Vintage rate in effect 7/1/98 through 6/30/00. (N)
[5] Vintage rate in effect 7/5/96 through 6/30/98. (T)

6. SWITCHED ACCESS SERVICE

6.8 RATES AND CHARGES
6.8.1 SWITCHED TRANSPORT

A.3. (Cont'd)

b. DS3 - Electrical Interface Capacity of Two[1,2,3], per point of termination, per capacity

	USOC
• Monthly	
- Per Capacity	EF2PX
- Per DS3	EF2CX
• 12 Months	
- Per Capacity	EF2PX
- Per DS3	EF2CX
• 24 Months	
- Per Capacity	EF2PX
- Per DS3	EF2CX
• 36 Months	
- Per Capacity	EF2PX
- Per DS3	EF2CX
• 60 Months	
- Per Capacity	EF2PX
- Per DS3	EF2CX
• 120 Months	
- Per Capacity	EF2PX
- Per DS3	EF2CX

[1] For Shared Use only as set forth in 2.7.2, preceding.

[2] Applicable only in Pricing Plan states as set forth in 6.7.15, preceding.

[3] DS3 Service Electrical Interface Capacity of Two is only available as set forth in 7.12.1, following. (T)

6. SWITCHED ACCESS SERVICE

6.8 RATES AND CHARGES
6.8.1 SWITCHED TRANSPORT

A.3.b. (Cont'd)

MONTHLY RATE[1,2,3,4]
(DS3 Electrical Capacity of Two)

	NON-PLAN	ZONE 1	ZONE 2	ZONE 3
• Monthly				
- Capacity	–	$1,936.00	$1,936.00	$1,936.00
- Per DS3	–	160.00	160.00	160.00
• 12 Months				
- Capacity	–	1,878.00	1,878.00	1,878.00
- Per DS3	–	155.00	155.00	155.00
• 24 Months				
- Capacity	–	1,820.00	1,820.00	1,820.00
- Per DS3	–	150.00	150.00	150.00
• 36 Months				
- Capacity	–	1,742.00	1,742.00	1,742.00
- Per DS3	–	144.00	144.00	144.00
• 60 Months				
- Capacity	–	1,549.00	1,549.00	1,549.00
- Per DS3	–	128.00	128.00	128.00
• 120 Months				
- Capacity	–	1,549.00	1,549.00	1,549.00
- Per DS3	–	128.00	128.00	128.00

[1] Rates and charges for Non-Plan and Zones 1, 2 and 3 apply as set forth in 6.7.14, preceding.

[2] For Shared Use only as set forth in 2.7.2, preceding.

[3] Applicable only in Pricing Plan states as set forth in 6.7.15, preceding.

[4] DS3 Service Electrical Interface Capacity of Two is only available as set forth in 7.12.1, following. (T)

6. SWITCHED ACCESS SERVICE

6.8 RATES AND CHARGES
6.8.1 SWITCHED TRANSPORT

A.3. (Cont'd)

c. DS3 - Electrical Interface Capacity of Three[1,2,3], per point of termination, per capacity

	USOC
• Monthly	
- Per Capacity	EF2PX
- Per DS3	EF2CX
• 12 Months	
- Per Capacity	EF2PX
- Per DS3	EF2CX
• 24 Months	
- Per Capacity	EF2PX
- Per DS3	EF2CX
• 36 Months	
- Per Capacity	EF2PX
- Per DS3	EF2CX
• 60 Months	
- Per Capacity	EF2PX
- Per DS3	EF2CX
• 120 Months	
- Per Capacity	EF2PX
- Per DS3	EF2CX

[1] For Shared Use only as set forth in 2.7.2, preceding.

[2] Applicable only in Pricing Plan states as set forth in 6.7.15, preceding.

[3] DS3 Service Electrical Interface Capacity of Three is only available as set forth in 7.12.1, following. (T)

6. SWITCHED ACCESS SERVICE

6.8 RATES AND CHARGES
6.8.1 SWITCHED TRANSPORT
A.3.c. (Cont'd)

MONTHLY RATE[1,2,3,4] (S-y)
(DS3 Electrical Capacity of Three)

	NON-PLAN	ZONE 1	ZONE 2	ZONE 3
• Monthly				
- Capacity	–	$2,295.00	$2,295.00	$2,295.00
- Per DS3	–	133.00	133.00	133.00
• 12 Months				
- Capacity	–	2,227.00	2,227.00	2,227.00
- Per DS3	–	129.00	129.00	129.00
• 24 Months				
- Capacity	–	2,157.00	2,157.00	2,157.00
- Per DS3	–	125.00	125.00	125.00
• 36 Months				
- Capacity	–	2,066.00	2,066.00	2,066.00
- Per DS3	–	120.00	120.00	120.00
• 60 Months				
- Capacity	–	1,836.00	1,836.00	1,836.00
- Per DS3	–	106.00	106.00	106.00
• 120 Months				
- Capacity	–	1,836.00	1,836.00	1,836.00
- Per DS3	–	106.00	106.00	106.00

[1] Rates and charges for Non-Plan and Zones 1, 2 and 3 apply as set forth in 6.7.14, preceding.

[2] For Shared Use only as set forth in 2.7.2, preceding.

[3] Applicable only in Pricing Plan states as set forth in 6.7.15, preceding.

[4] DS3 Service Electrical Interface Capacity of Three is only available as set forth in Section 7.2.11, following. (C-x) (C-x)

(x) Issued under the authority of Special Permission No. 97-235.

(y) Reissued matter filed under Transmittal No. 856, scheduled to become effective August 5, 1997, subsequently deferred to September 4, 1997 by Special Permission No. 97-238.

6. SWITCHED ACCESS SERVICE

6.8 RATES AND CHARGES
6.8.1 SWITCHED TRANSPORT

A.3. (Cont'd)

d. DS3 - Electrical Interface Capacity of Six[1,2,3], per point of termination, per capacity (S-y)

	USOC
• Monthly	
- Per Capacity	EF2PX
- Per DS3	EF2CX
• 12 Months	
- Per Capacity	EF2PX
- Per DS3	EF2CX
• 24 Months	
- Per Capacity	EF2PX
- Per DS3	EF2CX
• 36 Months	
- Per Capacity	EF2PX
- Per DS3	EF2CX
• 60 Months	
- Per Capacity	EF2PX
- Per DS3	EF2CX
• 120 Months	
- Per Capacity	EF2PX
- Per DS3	EF2CX

[1] For Shared Use only as set forth in 2.7.2, preceding.

[2] Applicable only in Pricing Plan states as set forth in 6.7.15, preceding.

[3] DS3 Service Electrical Interface Capacity of Six is only available as set forth in Section 7.2.11, following. (C-x) (C-x)

(x) Issued under the authority of Special Permission No. 97-235.

(y) Reissued matter filed under Transmittal No. 856, scheduled to become effective August 5, 1997, subsequently deferred to September 4, 1997 by Special Permission No. 97-238.

6. SWITCHED ACCESS SERVICE

6.8 RATES AND CHARGES
6.8.1 SWITCHED TRANSPORT
A.3.d. (Cont'd)

MONTHLY RATE[1,2,3,4]
(DS3 Electrical Capacity of Six)

	NON-PLAN	ZONE 1	ZONE 2	ZONE 3
• Monthly				
- Capacity	–	$6,582.00	$6,582.00	$6,582.00
- Per DS3	–	81.00	81.00	81.00
• 12 Months				
- Capacity	–	6,385.00	6,385.00	6,385.00
- Per DS3	–	79.00	79.00	79.00
• 24 Months				
- Capacity	–	6,187.00	6,187.00	6,187.00
- Per DS3	–	76.00	76.00	76.00
• 36 Months				
- Capacity	–	5,923.00	5,923.00	5,923.00
- Per DS3	–	73.00	73.00	73.00
• 60 Months				
- Capacity	–	5,265.00	5,265.00	5,265.00
- Per DS3	–	67.00	67.00	67.00
• 120 Months				
- Capacity	–	5,265.00	5,265.00	5,265.00
- Per DS3	–	67.00	67.00	67.00

[1] Rates and charges for Non-Plan and Zones 1, 2 and 3 apply as set forth in 6.7.14, preceding.

[2] For Shared Use only as set forth in 2.7.2, preceding.

[3] Applicable only in Pricing Plan states as set forth in 6.7.15, preceding.

[4] DS3 Service Electrical Interface Capacity of Six is only available as set forth in 7.12.1, following. (T)

6. SWITCHED ACCESS SERVICE

6.8 RATES AND CHARGES
6.8.1 SWITCHED TRANSPORT

A.3. (Cont'd)

e. DS3 - Electrical Interface Capacity of Nine[1,2,3], per point of termination, per capacity

	USOC
• Monthly	
- Per Capacity	EF2PX
- Per DS3	EF2CX
• 12 Months	
- Per Capacity	EF2PX
- Per DS3	EF2CX
• 24 Months	
- Per Capacity	EF2PX
- Per DS3	EF2CX
• 36 Months	
- Per Capacity	EF2PX
- Per DS3	EF2CX
• 60 Months	
- Per Capacity	EF2PX
- Per DS3	EF2CX
• 120 Months	
- Per Capacity	EF2PX
- Per DS3	EF2CX

[1] For Shared Use only as set forth in 2.7.2, preceding.

[2] Applicable only in Pricing Plan states as set forth in 6.7.15, preceding.

[3] DS3 Service Electrical Interface Capacity of Nine is only available as set forth in 7.12.1, following. (T)

6. SWITCHED ACCESS SERVICE

6.8 RATES AND CHARGES
6.8.1 SWITCHED TRANSPORT

A.3.e. (Cont'd)

MONTHLY RATE[1,2,3,4]
(DS3 Electrical Capacity of Nine)

	NON-PLAN	ZONE 1	ZONE 2	ZONE 3
• Monthly				
- Capacity	–	$6,582.00	$6,582.00	$6,582.00
- Per DS3	–	81.00	81.00	81.00
• 12 Months				
- Capacity	–	6,385.00	6,385.00	6,385.00
- Per DS3	–	79.00	79.00	79.00
• 24 Months				
- Capacity	–	6,187.00	6,187.00	6,187.00
- Per DS3	–	76.00	76.00	76.00
• 36 Months				
- Capacity	–	5,923.00	5,923.00	5,923.00
- Per DS3	–	73.00	73.00	73.00
• 60 Months				
- Capacity	–	5,265.00	5,265.00	5,265.00
- Per DS3	–	67.00	67.00	67.00
• 120 Months				
- Capacity	–	5,265.00	5,265.00	5,265.00
- Per DS3	–	67.00	67.00	67.00

[1] Rates and charges for Non-Plan and Zones 1, 2 and 3 apply as set forth in 6.7.14, preceding.

[2] For Shared Use only as set forth in 2.7.2, preceding.

[3] Applicable only in Pricing Plan states as set forth in 6.7.15, preceding.

[4] DS3 Service Electrical Interface Capacity of Nine is only available as set forth in 7.12.1, following. (T)

6. SWITCHED ACCESS SERVICE

6.8 RATES AND CHARGES
6.8.1 SWITCHED TRANSPORT

A.3. (Cont'd)

f. DS3 - Electrical Interface Capacity of Twelve[1,2,3], per point of termination, per capacity

	USOC
• Monthly	
- Per Capacity	EF2PX
- Per DS3	EF2CX
• 12 Months	
- Per Capacity	EF2PX
- Per DS3	EF2CX
• 24 Months	
- Per Capacity	EF2PX
- Per DS3	EF2CX
• 36 Months	
- Per Capacity	EF2PX
- Per DS3	EF2CX
• 60 Months	
- Per Capacity	EF2PX
- Per DS3	EF2CX
• 120 Months	
- Per Capacity	EF2PX
- Per DS3	EF2CX

[1] For Shared Use only as set forth in 2.7.2, preceding.

[2] Applicable only in Pricing Plan states as set forth in 6.7.15, preceding.

[3] DS3 Service Electrical Interface Capacity of Twelve is only available as set forth in 7.12.1, following. (T)

6. SWITCHED ACCESS SERVICE

6.8 RATES AND CHARGES
6.8.1 SWITCHED TRANSPORT

A.3.f. (Cont'd)

MONTHLY RATE[1,2,3,4]
(DS3 Electrical Capacity of Twelve)

	NON-PLAN	ZONE 1	ZONE 2	ZONE 3
• Monthly				
- Capacity	–	$6,582.00	$6,582.00	$6,582.00
- Per DS3	–	81.00	81.00	81.00
• 12 Months				
- Capacity	–	6,385.00	6,385.00	6,385.00
- Per DS3	–	79.00	79.00	79.00
• 24 Months				
- Capacity	–	6,187.00	6,187.00	6,187.00
- Per DS3	–	76.00	76.00	76.00
• 36 Months				
- Capacity	–	5,923.00	5,923.00	5,923.00
- Per DS3	–	73.00	73.00	73.00
• 60 Months				
- Capacity	–	5,265.00	5,265.00	5,265.00
- Per DS3	–	67.00	67.00	67.00
• 120 Months				
- Capacity	–	5,265.00	5,265.00	5,265.00
- Per DS3	–	67.00	67.00	67.00

[1] Rates and charges for Non-Plan and Zones 1, 2 and 3 apply as set forth in 6.7.14, preceding.

[2] For Shared Use only as set forth in 2.7.2, preceding.

[3] Applicable only in Pricing Plan states as set forth in 6.7.15, preceding.

[4] DS3 Service Electrical Interface Capacity of Twelve is only available as set forth in 7.12.1, following. (T)

6. SWITCHED ACCESS SERVICE

6.8 RATES AND CHARGES
6.8.1 SWITCHED TRANSPORT

A.3. (Cont'd)

g. DS3 - Electrical Interface Capacity of Twenty-four[1,2,3], per point of termination, per capacity

	USOC
• Monthly	
- Per Capacity	EF2PX
- Per DS3	EF2CX
• 12 Months	
- Per Capacity	EF2PX
- Per DS3	EF2CX
• 24 Months	
- Per Capacity	EF2PX
- Per DS3	EF2CX
• 36 Months	
- Per Capacity	EF2PX
- Per DS3	EF2CX
• 60 Months	
- Per Capacity	EF2PX
- Per DS3	EF2CX
• 120 Months	
- Per Capacity	EF2PX
- Per DS3	EF2CX

[1] For Shared Use only as set forth in 2.7.2, preceding.

[2] Applicable only in Pricing Plan states as set forth in 6.7.15, preceding.

[3] DS3 Service Electrical Interface Capacity of Tweny-four is only available as set forth in 7.12.1, following. (T)

6. SWITCHED ACCESS SERVICE

6.8 RATES AND CHARGES
6.8.1 SWITCHED TRANSPORT
A.3.g. (Cont'd)

MONTHLY RATE[1,2,3,4]
(DS3 Electrical Capacity of Twenty-four)

	NON-PLAN	ZONE 1	ZONE 2	ZONE 3
• Monthly				
- Capacity	–	$12,850.00	$12,850.00	$12,850.00
- Per DS3	–	87.00	87.00	87.00
• 12 Months				
- Capacity	–	12,465.00	12,465.00	12,465.00
- Per DS3	–	84.00	84.00	84.00
• 24 Months				
- Capacity	–	12,079.00	12,079.00	12,079.00
- Per DS3	–	82.00	82.00	82.00
• 36 Months				
- Capacity	–	11,565.00	11,565.00	11,565.00
- Per DS3	–	79.00	79.00	79.00
• 60 Months				
- Capacity	–	10,280.00	10,280.00	10,280.00
- Per DS3	–	70.00	70.00	70.00
• 120 Months				
- Capacity	–	10,280.00	10,280.00	10,280.00
- Per DS3	–	70.00	70.00	70.00

[1] Rates and charges for Non-Plan and Zones 1, 2 and 3 apply as set forth in 6.7.14, preceding.

[2] For Shared Use only as set forth in 2.7.2, preceding.

[3] Applicable only in Pricing Plan states as set forth in 6.7.15, preceding.

[4] DS3 Service Electrical Capacity of Tweny-four is only available as set forth in 7.12.1, following. (T)

6. SWITCHED ACCESS SERVICE

6.8 RATES AND CHARGES
6.8.1 SWITCHED TRANSPORT

A.3. (Cont'd)

h. DS3 - Electrical Interface Capacity of Thirty-six[1,2,3], per point of termination, per capacity

	USOC
• Monthly	
- Per Capacity	EF2PX
- Per DS3	EF2CX
• 12 Months	
- Per Capacity	EF2PX
- Per DS3	EF2CX
• 24 Months	
- Per Capacity	EF2PX
- Per DS3	EF2CX
• 36 Months	
- Per Capacity	EF2PX
- Per DS3	EF2CX
• 60 Months	
- Per Capacity	EF2PX
- Per DS3	EF2CX
• 120 Months	
- Per Capacity	EF2PX
- Per DS3	EF2CX

[1] For Shared Use only as set forth in 2.7.2, preceding.

[2] Applicable only in Pricing Plan states as set forth in 6.7.15, preceding.

[3] DS3 Service Electrical Capacity of Thirty-six is only available as set forth in 7.12.1, following. (T)

6. SWITCHED ACCESS SERVICE

6.8 RATES AND CHARGES
6.8.1 SWITCHED TRANSPORT

A.3.h. (Cont'd)

MONTHLY RATE[1,2,3,4]
(DS3 Electrical Capacity of Thirty-six)

	NON-PLAN	ZONE 1	ZONE 2	ZONE 3
• Monthly				
- Capacity	–	$21,883.00	$21,883.00	$21,883.00
- Per DS3	–	97.00	97.00	97.00
• 12 Months				
- Capacity	–	21,212.00	21,212.00	21,212.00
- Per DS3	–	94.00	94.00	94.00
• 24 Months				
- Capacity	–	20,539.00	20,539.00	20,539.00
- Per DS3	–	91.00	91.00	91.00
• 36 Months				
- Capacity	–	19,675.00	19,675.00	19,675.00
- Per DS3	–	87.00	87.00	87.00
• 60 Months				
- Capacity	–	17,515.00	17,515.00	17,515.00
- Per DS3	–	78.00	78.00	78.00
• 120 Months				
- Capacity	–	17,515.00	17,515.00	17,515.00
- Per DS3	–	78.00	78.00	78.00

[1] Rates and charges for Non-Plan and Zones 1, 2 and 3 apply as set in 6.7.14, preceding.

[2] For Shared Use only as set forth in 2.7.2, preceding.

[3] Applicable only in Pricing Plan states as set forth in 6.7.15, preceding.

[4] DS3 Service Electrical Interface Capacity of Thirty-six is only available as set forth in 7.12.1, following. (T)

6. SWITCHED ACCESS SERVICE

6.8 RATES AND CHARGES
6.8.1 SWITCHED TRANSPORT

A. Entrance Facility (Cont'd)

4. DS3 - Optical Interface[1] (T)

a. per point of termination

	USOC
• Monthly Per DS3	EF2DX

(D)

[1] For Shared Use only as set forth in 2.7.7, preceding. (T)

6. SWITCHED ACCESS SERVICE

6.8 RATES AND CHARGES
6.8.1 SWITCHED TRANSPORT

A.4.a. (Cont'd)

	MONTHLY RATE[1,2,3] (DS3 Optical Interface)
• Monthly	
- Per DS3	$688.53(R)

[1] For Shared Use only as set forth in 2.7.7, preceding and in accordance with 7.12.1, following.

[2] Available in states where Pricing Plans are not offered and the DS3 facility is not provisioned on a higher facility.

[3] Available in all states when the DS3 facility is provisioned on a Private Line Transport Service SST facility where the common interface working at the customer's premises is at an optical level.

6. SWITCHED ACCESS SERVICE

6.8 RATES AND CHARGES
6.8.1 SWITCHED TRANSPORT

A. Entrance Facility

4. DS3 - Optical Interface[1] (Cont'd)

b. DS3 - Optical Interface Capacity of Two[1,2,3], per point of termination, per capacity

	USOC
• Monthly	
- Per Capacity	EF2LX
- Per DS3	EF2DX
• 12 Months	
- Per Capacity	EF2LX
- Per DS3	EF2DX
• 24 Months	
- Per Capacity	EF2LX
- Per DS3	EF2DX
• 36 Months	
- Per Capacity	EF2LX
- Per DS3	EF2DX
• 60 Months	
- Per Capacity	EF2LX
- Per DS3	EF2DX
• 120 Months	
- Per Capacity	EF2LX
- Per DS3	EF2DX

[1] For Shared Use only as set forth in 2.7.7, preceding.

[2] Applicable only in Pricing Plan states as set forth in 6.7.15, preceding.

[3] DS3 Service Optical Interface Capacity of Two is only available as set forth in 7.12.1, following. (T)

6. SWITCHED ACCESS SERVICE

6.8 RATES AND CHARGES
6.8.1 SWITCHED TRANSPORT

A.4.b. (Cont'd)

MONTHLY RATE[1,2,3,4]
(DS3 Optical Capacity of Two)

	NON-PLAN	ZONE 1	ZONE 2	ZONE 3
• Monthly				
- Capacity	–	$1,747.00	$1,747.00	$1,747.00
- Per DS3	–	70.00	70.00	70.00
• 12 Months				
- Capacity	–	1,695.00	1,695.00	1,695.00
- Per DS3	–	68.00	68.00	68.00
• 24 Months				
- Capacity	–	1,642.00	1,642.00	1,642.00
- Per DS3	–	66.00	66.00	66.00
• 36 Months				
- Capacity	–	1,572.00	1,572.00	1,572.00
- Per DS3	–	63.00	63.00	63.00
• 60 Months				
- Capacity	–	1,398.00	1,398.00	1,398.00
- Per DS3	–	56.00	56.00	56.00
• 120 Months				
- Capacity	–	1,398.00	1,398.00	1,398.00
- Per DS3	–	56.00	56.00	56.00

[1] Rates and charges for Non-Plan and Zones 1, 2 and 3 apply as set forth in 6.7.14, preceding.

[2] For Shared Use only as set forth in 2.7.7, preceding.

[3] Applicable only in Pricing Plan states as set forth in 6.7.15, preceding.

[4] DS3 Service Optical Interface Capacity of Two is only available as set forth in 7.12.1, following. (T)

6. SWITCHED ACCESS SERVICE

6.8 RATES AND CHARGES
6.8.1 SWITCHED TRANSPORT

A.4. (Cont'd)

c. DS3 - Optical Interface Capacity of Three[1,2,3], per point of termination, per capacity

	USOC
• Monthly	
- Per Capacity	EF2LX
- Per DS3	EF2DX
• 12 Months	
- Per Capacity	EF2LX
- Per DS3	EF2DX
• 24 Months	
- Per Capacity	EF2LX
- Per DS3	EF2DX
• 36 Months	
- Per Capacity	EF2LX
- Per DS3	EF2DX
• 60 Months	
- Per Capacity	EF2LX
- Per DS3	EF2DX
• 120 Months	
- Per Capacity	EF2LX
- Per DS3	EF2DX

[1] For Shared Use only as set forth in 2.7.7, preceding.

[2] Applicable only in Pricing Plan states as set forth in 6.7.15, preceding.

[3] DS3 Service Optical Interface Capacity of Three is only available as set forth in 7.12.1, following. (T)

6. SWITCHED ACCESS SERVICE

6.8 RATES AND CHARGES
6.8.1 SWITCHED TRANSPORT

A.4.c. (Cont'd)

MONTHLY RATE[1,2,3,4]
(DS3 Optical Capacity of Three)

	NON-PLAN	ZONE 1	ZONE 2	ZONE 3
• Monthly				
- Capacity	–	$1,747.00	$1,747.00	$1,747.00
- Per DS3	–	70.00	70.00	70.00
• 12 Months				
- Capacity	–	1,695.00	1,695.00	1,695.00
- Per DS3	–	68.00	68.00	68.00
• 24 Months				
- Capacity	–	1,642.00	1,642.00	1,642.00
- Per DS3	–	66.00	66.00	66.00
• 36 Months				
- Capacity	–	1,572.00	1,572.00	1,572.00
- Per DS3	–	63.00	63.00	63.00
• 60 Months				
- Capacity	–	1,398.00	1,398.00	1,398.00
- Per DS3	–	56.00	56.00	56.00
• 120 Months				
- Capacity	–	1,398.00	1,398.00	1,398.00
- Per DS3	–	56.00	56.00	56.00

[1] Rates and charges for Non-Plan and Zones 1, 2 and 3 apply as set forth in 6.7.14, preceding.

[2] For Shared Use only as set forth in 2.7.7, preceding.

[3] Applicable only in Pricing Plan states as set forth in 6.7.15, preceding.

[4] DS3 Service Optical Interface Capacity of Three is only available as set forth in 7.12.1, following. (T)

6. SWITCHED ACCESS SERVICE

6.8 RATES AND CHARGES
6.8.1 SWITCHED TRANSPORT

A.4. (Cont'd)

d. DS3 - Optical Interface Capacity of Six[1,2,3], per point of termination, per capacity

	USOC
• Monthly	
- Per Capacity	EF2LX
- Per DS3	EF2DX
• 12 Months	
- Per Capacity	EF2LX
- Per DS3	EF2DX
• 24 Months	
- Per Capacity	EF2LX
- Per DS3	EF2DX
• 36 Months	
- Per Capacity	EF2LX
- Per DS3	EF2DX
• 60 Months	
- Per Capacity	EF2LX
- Per DS3	EF2DX
• 120 Months	
- Per Capacity	EF2LX
- Per DS3	EF2DX

[1] For Shared Use only as set forth in 2.7.7, preceding.

[2] Applicable only in Pricing Plan states as set forth in 6.7.15, preceding.

[3] DS3 Service Optical Interface Capacity of Six is only available as set forth in 7.12.1, following. (T)

6. SWITCHED ACCESS SERVICE

6.8 RATES AND CHARGES
6.8.1 SWITCHED TRANSPORT

A.4.d. (Cont'd)

MONTHLY RATE[1,2,3,4]
(DS3 Optical Capacity of Six)

	NON-PLAN	ZONE 1	ZONE 2	ZONE 3
• Monthly				
- Capacity	–	$3,691.00	$3,691.00	$3,691.00
- Per DS3	–	40.00	40.00	40.00
• 12 Months				
- Capacity	–	3,581.00	3,581.00	3,581.00
- Per DS3	–	39.00	39.00	39.00
• 24 Months				
- Capacity	–	3,469.00	3,469.00	3,469.00
- Per DS3	–	38.00	38.00	38.00
• 36 Months				
- Capacity	–	3,321.00	3,321.00	3,321.00
- Per DS3	–	36.00	36.00	36.00
• 60 Months				
- Capacity	–	2,952.00	2,952.00	2,952.00
- Per DS3	–	34.00	34.00	34.00
• 120 Months				
- Capacity	–	2,952.00	2,952.00	2,952.00
- Per DS3	–	34.00	34.00	34.00

[1] Rates and charges for Non-Plan and Zones 1, 2 and 3 apply as set forth in 6.7.14, preceding.

[2] For Shared Use only as set forth in 2.7.7, preceding.

[3] Applicable only in Pricing Plan states as set forth in 6.7.15, preceding.

[4] DS3 Service Optical Interface Capacity of Six is only available as set forth in 7.12.1, following. (T)

6. SWITCHED ACCESS SERVICE

6.8 RATES AND CHARGES
6.8.1 SWITCHED TRANSPORT

A.4. (Cont'd)

e. DS3 - Optical Interface Capacity of Nine[1,2,3], per point of termination, per capacity

	USOC
• Monthly	
- Per Capacity	EF2LX
- Per DS3	EF2DX
• 12 Months	
- Per Capacity	EF2LX
- Per DS3	EF2DX
• 24 Months	
- Per Capacity	EF2LX
- Per DS3	EF2DX
• 36 Months	
- Per Capacity	EF2LX
- Per DS3	EF2DX
• 60 Months	
- Per Capacity	EF2LX
- Per DS3	EF2DX
• 120 Months	
- Per Capacity	EF2LX
- Per DS3	EF2DX

[1] For Shared Use only as set forth in 2.7.7, preceding.

[2] Applicable only in Pricing Plan states as set forth in 6.7.15, preceding.

[3] DS3 Service Optical Interface Capacity of Nine is only available as set forth in 7.12.1, following. (T)

6. SWITCHED ACCESS SERVICE

6.8 RATES AND CHARGES
6.8.1 SWITCHED TRANSPORT

A.4.e. (Cont'd)

MONTHLY RATE[1,2,3,4]
(DS3 Optical Capacity of Nine)

	NON-PLAN	ZONE 1	ZONE 2	ZONE 3
• Monthly				
- Capacity	–	$3,691.00	$3,691.00	$3,691.00
- Per DS3	–	40.00	40.00	40.00
• 12 Months				
- Capacity	–	3,581.00	3,581.00	3,581.00
- Per DS3	–	39.00	39.00	39.00
• 24 Months				
- Capacity	–	3,469.00	3,469.00	3,469.00
- Per DS3	–	38.00	38.00	38.00
• 36 Months				
- Capacity	–	3,321.00	3,321.00	3,321.00
- Per DS3	–	36.00	36.00	36.00
• 60 Months				
- Capacity	–	2,952.00	2,952.00	2,952.00
- Per DS3	–	34.00	34.00	34.00
• 120 Months				
- Capacity	–	2,952.00	2,952.00	2,952.00
- Per DS3	–	34.00	34.00	34.00

[1] Rates and charges for Non-Plan and Zones 1, 2 and 3 apply as set forth in 6.7.14, preceding.

[2] For Shared Use only as set forth in 2.7.7, preceding.

[3] Applicable only in Pricing Plan states as set forth in 6.7.15, preceding.

[4] DS3 Service Optical Interface Capacity of Nine is only available as set forth in 7.12.1, following. (T)

6. SWITCHED ACCESS SERVICE

6.8 RATES AND CHARGES
6.8.1 SWITCHED TRANSPORT

A.4. (Cont'd)

f. DS3 - Optical Interface Capacity of Twelve[1,2,3], per point of termination, per capacity

	USOC
• Monthly	
- Per Capacity	EF2LX
- Per DS3	EF2DX
• 12 Months	
- Per Capacity	EF2LX
- Per DS3	EF2DX
• 24 Months	
- Per Capacity	EF2LX
- Per DS3	EF2DX
• 36 Months	
- Per Capacity	EF2LX
- Per DS3	EF2DX
• 60 Months	
- Per Capacity	EF2LX
- Per DS3	EF2DX
• 120 Months	
- Per Capacity	EF2LX
- Per DS3	EF2DX

[1] For Shared Use only as set forth in 2.7.7, preceding.

[2] Applicable only in Pricing Plan states as set forth in 6.7.15, preceding.

[3] DS3 Service Optical Interface Capacity of Twelve is only available as set forth in 7.12.1, following. (T)

6. SWITCHED ACCESS SERVICE

6.8 RATES AND CHARGES
6.8.1 SWITCHED TRANSPORT

A.4.f. (Cont'd)

MONTHLY RATE[1,2,3,4]
(DS3 Optical Capacity of Twelve)

	NON-PLAN	ZONE 1	ZONE 2	ZONE 3
• Monthly				
- Capacity	–	$3,691.00	$3,691.00	$3,691.00
- Per DS3	–	40.00	40.00	40.00
• 12 Months				
- Capacity	–	3,581.00	3,581.00	3,581.00
- Per DS3	–	39.00	39.00	39.00
• 24 Months				
- Capacity	–	3,469.00	3,469.00	3,469.00
- Per DS3	–	38.00	38.00	38.00
• 36 Months				
- Capacity	–	3,321.00	3,321.00	3,321.00
- Per DS3	–	36.00	36.00	36.00
• 60 Months				
- Capacity	–	2,952.00	2,952.00	2,952.00
- Per DS3	–	34.00	34.00	34.00
• 120 Months				
- Capacity	–	2,952.00	2,952.00	2,952.00
- Per DS3	–	34.00	34.00	34.00

[1] Rates and charges for Non-Plan and Zones 1, 2 and 3 apply as set forth in 6.7.14, preceding.

[2] For Shared Use only as set forth in 2.7.7, preceding.

[3] Applicable only in Pricing Plan states as set forth in 6.7.15, preceding.

[4] DS3 Service Optical Interface Capacity of Twelve is only available as set forth in 7.12.1, following. (T)

6. SWITCHED ACCESS SERVICE

6.8 RATES AND CHARGES
6.8.1 SWITCHED TRANSPORT

A.4. (Cont'd)

g. DS3 - Optical Interface Capacity of Eighteen[1,2,3] per point of termination, per capacity

	USOC
• Monthly	
- Per Capacity	EF2LX
- Per DS3	EF2DX
• 12 Months	
- Per Capacity	EF2LX
- Per DS3	EF2DX
• 24 Months	
- Per Capacity	EF2LX
- Per DS3	EF2DX
• 36 Months	
- Per Capacity	EF2LX
- Per DS3	EF2DX
• 60 Months	
- Per Capacity	EF2LX
- Per DS3	EF2DX
• 120 Months	
- Per Capacity	EF2LX
- Per DS3	EF2DX

[1] For Shared Use only as set forth in 2.7.7, preceding.

[2] Applicable only in Pricing Plan states as set forth in 6.7.15, preceding.

[3] DS3 Service Optical Interface Capacity of Eighteen is only available as set forth in 7.12.1, following. (T)

6. SWITCHED ACCESS SERVICE

6.8 RATES AND CHARGES
6.8.1 SWITCHED TRANSPORT

A.4.g. (Cont'd)

MONTHLY RATE[1,2,3,4]
(DS3 Optical Capacity of Eighteen)

	NON-PLAN	ZONE 1	ZONE 2	ZONE 3
• Monthly				
- Capacity	–	$7,250.00	$7,250.00	$7,250.00
- Per DS3	–	52.00	52.00	52.00
• 12 Months				
- Capacity	–	7,033.00	7,033.00	7,033.00
- Per DS3	–	50.00	50.00	50.00
• 24 Months				
- Capacity	–	6,815.00	6,815.00	6,815.00
- Per DS3	–	49.00	49.00	49.00
• 36 Months				
- Capacity	–	6,525.00	6,525.00	6,525.00
- Per DS3	–	47.00	47.00	47.00
• 60 Months				
- Capacity	–	5,800.00	5,800.00	5,800.00
- Per DS3	–	42.00	42.00	42.00
• 120 Months				
- Capacity	–	5,800.00	5,800.00	5,800.00
- Per DS3	–	42.00	42.00	42.00

[1] Rates and charges for Non-Plan and Zones 1, 2 and 3 apply as set forth in 6.7.14, preceding.

[2] For Shared Use only as set forth in 2.7.7, preceding.

[3] Applicable only in Pricing Plan states as set forth in 6.7.15, preceding.

[4] DS3 Service Optical Interface Capacity of Eighteen is only available as set forth in 7.12.1, following. (T)

6. SWITCHED ACCESS SERVICE

6.8 RATES AND CHARGES
6.8.1 SWITCHED TRANSPORT

A.4. (Cont'd)

h. DS3 - Optical Interface Capacity of Twenty-four[1,2,3] per point of termination, per capacity

	USOC
• Monthly	
- Per Capacity	EF2LX
- Per DS3	EF2DX
• 12 Months	
- Per Capacity	EF2LX
- Per DS3	EF2DX
• 24 Months	
- Per Capacity	EF2LX
- Per DS3	EF2DX
• 36 Months	
- Per Capacity	EF2LX
- Per DS3	EF2DX
• 60 Months	
- Per Capacity	EF2LX
- Per DS3	EF2DX
• 120 Months	
- Per Capacity	EF2LX
- Per DS3	EF2DX

[1] For Shared Use only as set forth in 2.7.7, preceding.

[2] Applicable only in Pricing Plan states as set forth in 6.7.15, preceding.

[3] DS3 Service Optical Interface Capacity of Twenty-four is only available as set forth in 7.12.1, following. (T)

6. SWITCHED ACCESS SERVICE

6.8 RATES AND CHARGES
6.8.1 SWITCHED TRANSPORT

A.4.h. (Cont'd)

MONTHLY RATE[1,2,3,4]
(DS3 Optical Capacity of Twenty-four)

	NON-PLAN	ZONE 1	ZONE 2	ZONE 3
• Monthly				
- Capacity	–	$7,250.00	$7,250.00	$7,250.00
- Per DS3	–	52.00	52.00	52.00
• 12 Months				
- Capacity	–	7,033.00	7,033.00	7,033.00
- Per DS3	–	50.00	50.00	50.00
• 24 Months				
- Capacity	–	6,815.00	6,815.00	6,815.00
- Per DS3	–	49.00	49.00	49.00
• 36 Months				
- Capacity	–	6,525.00	6,525.00	6,525.00
- Per DS3	–	47.00	47.00	47.00
• 60 Months				
- Capacity	–	5,800.00	5,800.00	5,800.00
- Per DS3	–	42.00	42.00	42.00
• 120 Months				
- Capacity	–	5,800.00	5,800.00	5,800.00
- Per DS3	–	42.00	42.00	42.00

[1] Rates and charges for Non-Plan and Zones 1, 2 and 3 apply as set forth in 6.7.14, preceding.

[2] For Shared Use only as set forth in 2.7.7, preceding.

[3] Applicable only in Pricing Plan states as set forth in 6.7.15, preceding.

[4] DS3 Service Optical Interface Capacity of Twenty-four is only available as set forth in 7.12.1, following. (T)

6. SWITCHED ACCESS SERVICE

6.8 RATES AND CHARGES
6.8.1 SWITCHED TRANSPORT

A.4. (Cont'd)

i. DS3 - Optical Interface Capacity of Thirty-six[1,2,3] per point of termination, per capacity

	USOC
• Monthly	
- Per Capacity	EF2LX
- Per DS3	EF2DX
• 12 Months	
- Per Capacity	EF2LX
- Per DS3	EF2DX
• 24 Months	
- Per Capacity	EF2LX
- Per DS3	EF2DX
• 36 Months	
- Per Capacity	EF2LX
- Per DS3	EF2DX
• 60 Months	
- Per Capacity	EF2LX
- Per DS3	EF2DX
• 120 Months	
- Per Capacity	EF2LX
- Per DS3	EF2DX

[1] For Shared Use only as set forth in 2.7.7, preceding.

[2] Applicable only in Pricing Plan states as set forth in 6.7.15, preceding.

[3] DS3 Service Optical Interface Capacity of Thirty-six is only available as set forth in 7.12.1, following. (T)

6. SWITCHED ACCESS SERVICE

6.8 RATES AND CHARGES
6.8.1 SWITCHED TRANSPORT

A.4.i. (Cont'd)

MONTHLY RATE[1,2,3,4]
(DS3 Optical Capacity of Thirty-six)

	NON-PLAN	ZONE 1	ZONE 2	ZONE 3
• Monthly				
- Capacity	–	$11,659.00	$11,659.00	$11,659.00
- Per DS3	–	69.00	69.00	69.00
• 12 Months				
- Capacity	–	11,324.00	11,324.00	11,324.00
- Per DS3	–	67.00	67.00	67.00
• 24 Months				
- Capacity	–	10,939.00	10,939.00	10,939.00
- Per DS3	–	65.00	65.00	65.00
• 36 Months				
- Capacity	–	10,507.00	10,507.00	10,507.00
- Per DS3	–	62.00	62.00	62.00
• 60 Months				
- Capacity	–	9,355.00	9,355.00	9,355.00
- Per DS3	–	55.00	55.00	55.00
• 120 Months				
- Capacity	–	9,355.00	9,355.00	9,355.00
- Per DS3	–	55.00	55.00	55.00

[1] Rates and charges for Non-Plan and Zones 1, 2 and 3 apply as set forth in 6.7.14, preceding.

[2] For Shared Use only as set forth in 2.7.7, preceding.

[3] Applicable only in Pricing Plan states as set forth in 6.7.15, preceding.

[4] DS3 Service Optical Interface Capacity of Thirty-six is only available as set forth in 7.12.1, following. (T)

6. SWITCHED ACCESS SERVICE

6.8 RATES AND CHARGES
6.8.1 SWITCHED TRANSPORT (Cont'd)

B. Direct-Trunked Transport

1. DTT Voice Grade Monthly,
   per point of termination, per mileage band

MILEAGE BANDS	USOC	MONTHLY RATE FIXED	MONTHLY RATE PER MILE
0	1YTXA	–	–
Over 0 to 8	1YTXB	$19.52 (R)	$0.25 (I)
Over 8 to 25	1YTXC	19.91	0.14 (R)
Over 25 to 50	1YTXD	19.05	0.12
Over 50	1YTXE	24.67 (R)	0.29 (R)

6. SWITCHED ACCESS SERVICE

6.8 RATES AND CHARGES
6.8.1 SWITCHED TRANSPORT

B. Direct-Trunked Transport (Cont'd)

2. DTT DS1 Monthly,
per point of termination, per mileage band

USOC - MILEAGE BAND	MONTHLY RATE[1] NON-PLAN	ZONE 1	ZONE 2	ZONE 3
• 1YTXA 0				
- Fixed	–	–	–	–
- Per Miles	–	–	–	–
• 1YTXB Over 0 to 8				
- Fixed	$53.90 (R)	$53.90 (R)	$53.90 (R)	$53.90 (R)
- Per Mile	8.16 (R)	8.16 (R)	8.16 (R)	8.16 (R)
• 1YTXC 0ver 8 to 25				
- Fixed	68.70 (R)	68.70 (R)	68.70 (R)	68.70 (R)
- Per Mile	8.61 (R)	8.61 (R)	8.61 (R)	8.61 (R)
• 1YTXD Over 25 to 50				
- Fixed	74.65 (R)	74.65 (R)	74.65 (R)	74.65 (R)
- Per Mile	9.06 (R)	8.98 (R)	8.98 (R)	8.98 (R)
• 1YTXE Over 50				
- Fixed	82.20 (R)	82.20 (R)	82.20 (R)	82.20 (R)
- Per Mile	9.48 (R)	9.42 (R)	9.42 (R)	9.42 (R)

[1] Rates and charges for Non-Plan and Zones 1, 2 and 3 apply as set forth in 6.7.14.

6. SWITCHED ACCESS SERVICE

6.8 RATES AND CHARGES
6.8.1 SWITCHED TRANSPORT

B. Direct-Trunked Transport (Cont'd)

3. DTT DS1 Thirty-Six Months,
per point of termination, per mileage band

USOC Mileage Band	Monthly Rate[1] Non-Plan	Zone 1	Zone 2	Zone 3	
• 1YTXA 0					
- Fixed	–	–	–	–	
- Per Mile	–	–	–	–	
• 1YTXB Over 0 to 8					
- Fixed	–	$48.51 (R)	$48.51 (R)	$48.51 (R)	
Vintage[2]		77.85	77.85	77.85	(N)
- Per Mile	–	7.35 (R)	7.35 (R)	7.35 (R)	(T)
Vintage[2]		12.20	12.20	12.20	(N)
• 1YTXC 0ver 8 to 25					
- Fixed	–	61.84(R)	61.84 (R)	61.84 (R)	
Vintage[3]		98.88	98.88	98.88	(N)
- Per Mile	–	7.74(R)	7.74 (R)	7.74 (R)	(T)
Vintage[3]		12.77	12.77	12.77	(N)

[1] Rates and charges for Non-Plan and Zones 1, 2 and 3 apply as set forth in 6.7.14.

[2] Vintage rate in effect 7/5/96 through 6/30/00. (N)
[3] Vintage rate in effect 3/28/98 through 6/30/00. (N)

Certain material previously found on this page can now be found on Page 6-226.1.1.1.

6. SWITCHED ACCESS SERVICE

6.8 RATES AND CHARGES
6.8.1 SWITCHED TRANSPORT

B. Direct-Trunked Transport (Cont'd)

3. DTT DS1 Thirty-Six Months, (M)
per point of termination, per mileage band

MONTHLY RATE[1]

USOC Mileage Band	Non-Plan	Zone 1	Zone 2	Zone 3	
• 1YTXD					
Over 25 to 50					
- Fixed	–	67.19 (R)	67.19 (R)	67.19 (R)	(M)
Vintage[2]		104.72	104.72	104.72	(N)
- Per Mile	–	8.09 (R)	8.09 (R)	8.09 (R)	(M-T)
Vintage[2]		13.06	13.06	13.06	(N)
• 1YTXE					(M)
Over 50					(M)
- Fixed	–	73.98(R)	73.98 (R)	73.98(R)	(M)
Vintage[3]		115.19	115.19	115.19	(N)
- Per Mile	–	8.48(R)	8.48 (R)	8.48 (R)	(M-T)
Vintage[3]		13.52	13.52	13.52	(N)

[1] Rates and charges for Non-Plan and Zones 1, 2 and 3 apply as set forth in 6.7.14. (M)

[2] Vintage rate in effect 7/5/96 through 6/30/00. (N)
[3] Vintage rate in effect 3/28/98 through 6/30/00. (N)

Certain material on this page formerly appeared on Page 6-226.1.1.

6. SWITCHED ACCESS SERVICE

6.8 RATES AND CHARGES
6.8.1 SWITCHED TRANSPORT

B. Direct-Trunked Transport (Cont'd)

4. DTT DS1 Sixty Months,
per point of termination, per mileage band

USOC Mileage Band	Monthly Rate[1] Non-Plan	Zone 1	Zone 2	Zone 3	
• 1YTXA					
0					
- Fixed	–	–	–	–	
- Per Mile	–	–	–	–	
• 1YTXB					
Over 0 to 8					
- Fixed	–	$43.13 (R)	$43.13 (R)	$43.13 (R)	
Vintage[2]		69.20	69.20	69.20	(N)
- Per Mile	–	6.53 (R)	6.53 (R)	6.53 (R)	
Vintage[2]		10.84	10.84	10.84	(N)
• 1YTXC					
Over 8 to 25					
- Fixed	–	54.96 (R)	54.96 (R)	54.96 (R)	
Vintage[3]		87.88			(N)
Vintage[4]			87.88	87.88	(N)
- Per Mile	–	6.88 (R)	6.88 (R)	6.88 (R)	
Vintage[3]		11.35			(N)
Vintage[4]			11.35	11.35	(N)

[1] Rates and charges for Non-Plan and Zones 1, 2 and 3 apply as set forth in 6.7.14.

[2] Vintage rate in effect 7/5/96 through 6/30/00. (N)
[3] Vintage rate in effect 7/1/98 through 6/30/00. (N)
[4] Vintage rate in effect 3/29/98 through 6/30/00. (N)

Certain material previously found on this page can now be found on Page 6-226.1.3.

6. SWITCHED ACCESS SERVICE

6.8 RATES AND CHARGES
6.8.1 SWITCHED TRANSPORT

B. Direct-Trunked Transport (Cont'd)

4. DTT DS1 Sixty Months, (M)
per point of termination, per mileage band

USOC Mileage Band	Non-Plan	Monthly Rate[1] Zone 1	Zone 2	Zone 3	
• 1YTXD					
Over 25 to 50					
- Fixed	–	$59.72 (R)	$59.72 (R)	$59.72 (R)	(M)
Vintage[2]		93.08	93.08	93.08	(N)
- Per Mile	–	7.19 (R)	7.19 (R)	7.19 (R)	(M)
Vintage[2]		11.61	11.61	11.61	(N)
• 1YTXE					(M)
Over 50					(M)
- Fixed	–	65.76 (R)	65.76 (R)	65.76 (R)	(M)
Vintage[3]		102.39	102.39	102.39	(N)
- Per Mile	–	7.54 (R)	7.54 (R)	7.54 (R)	(M)
Vintage[3]		12.01	12.01	12.01	(N)

[1] Rates and charges for Non-Plan and Zones 1, 2 and 3 apply as set forth in 6.7.14. (M)

[2] Vintage rate in effect 7/5/96 through 6/30/00. (N)
[3] Vintage rate in effect 3/28/98 through 6/30/00. (N)

Certain material on this page formerly appeared on Page 6-226.1.2.

6. SWITCHED ACCESS SERVICE

6.8 RATES AND CHARGES
6.8.1 SWITCHED TRANSPORT

B. Direct-Trunked Transport (Cont'd)

5. DTT DS3 Monthly,
per point of termination, per mileage band

USOC - MILEAGE BAND	MONTHLY RATE[1] NON-PLAN	ZONE 1	ZONE 2	ZONE 3
• 1YTXA 0				
- Fixed	–	–	–	–
- Per Mile	–	–	–	–
• 1YTXB Over 0 to 8				
- Fixed	$477.65 (R)	$207.14 (R)	$207.14 (R)	$207.14 (R)
- Per Mile	78.90	43.00	43.00	43.00
• 1YTXC Over 8 to 25				
- Fixed	457.88 (R)	224.19 (R)	224.19 (R)	224.19 (R)
- Per Mile	50.88 (R)	27.73 (R)	27.73 (R)	27.73 (R)
• 1YTXD Over 25 to 50				
- Fixed	459.50 (R)	244.27 (R)	244.27 (R)	244.27 (R)
- Per Mile	51.91 (R)	28.30 (R)	28.30 (R)	28.30 (R)
• 1YTXE Over 50				
- Fixed	520.36 (R)	264.88 (R)	264.88 (R)	264.88 (R)
- Per Mile	58.94 (R)	32.12 (R)	32.12 (R)	32.12 (R)

[1] Rates and charges for Non-Plan and Zones 1, 2 and 3 apply as set forth in 6.7.14.

6. SWITCHED ACCESS SERVICE

6.8 RATES AND CHARGES
6.8.1 SWITCHED TRANSPORT

B. Direct-Trunked Transport (Cont'd)

6. DTT DS3 Twelve Months, per point of termination, per mileage band

USOC / MILEAGE BAND	NON-PLAN	MONTHLY RATE[1][2] ZONE 1	ZONE 2	ZONE 3	
• 1YTXA					
0					
- Fixed	–	–	–	–	
- Per Mile	–	–	–	–	
• 1YTXB					
Over 0 to 8					
- Fixed	–	$201.13 (R)	$201.13 (R)	$201.13 (R)	
Vintage[3]		301.00	301.00		(N)
Vintage[4]				301.00	(N)
- Per Mile	–	42.00	42.00	42.00	
Vintage[5]		40.00	40.00	40.00	(T)
• 1YTXC					
Over 8 to 25					
- Fixed	–	217.79 (R)	217.79 (R)	217.79 (R)	
Vintage[3]		340.00	340.00		(N)
Vintage[4]				340.00	(N)
- Per Mile	–	27.08 (R)	27.08 (R)	27.08 (R)	
Vintage[3]		42.00	42.00		(N)
Vintage[4]				42.00	(N)
Vintage[5]		40.00	40.00	40.00	(T)

[1] Rates and charges for Non-Plan and Zones 1, 2 and 3 apply as set forth in 6.7.14.
[2] 12 Mos. rate elements are for the billing of Shared Use only.

[3] Vintage rate in effect 7/5/96 through 6/30/00. (N)
[4] Vintage rate in effect 7/1/98 through 6/30/00. (N)
[5] Vintage rate in effect 3/29/98 through 6/30/98. (T)

6. SWITCHED ACCESS SERVICE

6.8 RATES AND CHARGES
6.8.1 SWITCHED TRANSPORT

B. Direct-Trunked Transport

6. DTT DS3 Twelve Months, per point of termination, per mileage band (Cont'd)

USOC / MILEAGE BAND	NON-PLAN	MONTHLY RATE[1][2] ZONE 1	ZONE 2	ZONE 3	
• 1YTXD					
Over 25 to 50					
- Fixed	–	$237.19 (R)	$237.19 (R)	$237.19 (R)	
Vintage[3]		369.00	369.00		(N)
Vintage[4]				369.00	(N)
- Per Mile	–	27.65 (R)	27.65 (R)	27.65 (R)	
Vintage[3]		43.00	43.00		(N)
Vintage[4]				43.00	(N)
Vintage[5]		41.00	41.00	41.00	(T)
• 1YTXE					
Over 50					
- Fixed	–	257.13 (R)	257.13 (R)	257.13 (R)	
Vintage[3]		398.00	398.00		(N)
Vintage[4]				398.00	(N)
- Per Mile	–	31.48 (R)	31.48 (R)	31.48 (R)	
Vintage[3]		49.00	49.00		(N)
Vintage[4]				49.00	(N)
Vintage[5]		47.00	47.00	47.00	(T)

[1] Rates and charges for Non-Plan and Zones 1, 2 and 3 apply as set forth in 6.7.14.
[2] 12 Mos. rate elements are for the billing of Shared Use only.

[3] Vintage rate in effect 7/5/96 through 6/30/00. (N)
[4] Vintage rate in effect 7/1/98 through 6/30/00. (N)
[5] Vintage rate in effect 3/29/98 through 6/30/98. (T)

6. SWITCHED ACCESS SERVICE

6.8 RATES AND CHARGES
6.8.1 SWITCHED TRANSPORT

B. Direct-Trunked Transport (Cont'd)

7. DTT DS3 Twenty-four Months, per point of termination, per mileage band

USOC / MILEAGE BAND	NON-PLAN	MONTHLY RATE[1][2] ZONE 1	ZONE 2	ZONE 3	
• 1YTXA					
0					
- Fixed	–	–	–	–	
- Per Mile	–	–	–	–	
• 1YTXB					
Over 0 to 8					
- Fixed	–	$194.44 (R)	$194.44 (R)	$194.44 (R)	
Vintage[3]		291.00	291.00		(N)
Vintage[4]				291.00	(N)
- Per Mile	–	40.00	40.00	40.00	
Vintage[5]		38.00	38.00	38.00	(T)
• 1YTXC					
Over 8 to 25					
- Fixed	–	210.74 (R)	210.74 (R)	210.74 (R)	
Vintage[3]		329.00	329.00		(N)
Vintage[4]				329.00	(N)
- Per Mile	–	25.79 (R)	25.79 (R)	25.79 (R)	
Vintage[3]		40.00	40.00		(N)
Vintage[4]				40.00	(N)
Vintage[5]		38.00	38.00	38.00	(T)

[1] Rates and charges for Non-Plan and Zones 1, 2 and 3 apply as set forth in 6.7.14.
[2] 24 Mos. rate elements are for the billing of Shared Use only.

[3] Vintage rate in effect 7/5/96 through 6/30/00. (N)
[4] Vintage rate in effect 7/1/98 through 6/30/00. (N)
[5] Vintage rate in effect 3/29/98 through 6/30/98. (T)

6. SWITCHED ACCESS SERVICE

6.8 RATES AND CHARGES
6.8.1 SWITCHED TRANSPORT

B. Direct-Trunked Transport

7. DTT DS3 Twenty-four Months, per point of termination, per mileage band (Cont'd)

USOC / MILEAGE BAND	NON-PLAN	MONTHLY RATE[1][2] ZONE 1	ZONE 2	ZONE 3	
• 1YTXD					
Over 25 to 50					
- Fixed	–	$229.48 (R)	$229.48 (R)	$229.48 (R)	
Vintage[3]		357.00	357.00		(N)
Vintage[4]				357.00	(N)
- Per Mile	–	26.37 (R)	26.37 (R)	26.37 (R)	
Vintage[3]		41.00	41.00		(N)
Vintage[4]				41.00	(N)
Vintage[5]		39.00	39.00	39.00	(T)
• 1YTXE					
Over 50					
- Fixed	–	248.73 (R)	248.73 (R)	248.73 (R)	
Vintage[3]		385.00	385.00		(N)
Vintage[4]				385.00	(N)
- Per Mile	–	30.19 (R)	30.19 (R)	30.19 (R)	
Vintage[3]		47.00	47.00		(N)
Vintage[4]				47.00	(N)
Vintage[5]		45.00	45.00	45.00	(T)

[1] Rates and charges for Non-Plan and Zones 1, 2 and 3 apply as set forth in 6.7.14.
[2] 24 Mos. rate elements are for the billing of Shared Use only.

[3] Vintage rate in effect 7/5/96 through 6/30/00. (N)
[4] Vintage rate in effect 7/1/98 through 6/30/00. (N)
[5] Vintage rate in effect 3/29/98 through 6/30/98. (T)

6. SWITCHED ACCESS SERVICE

6.8 RATES AND CHARGES
6.8.1 SWITCHED TRANSPORT

B. Direct-Trunked Transport (Cont'd)

8. DTT DS3 Thirty-Six Months, per point of termination, per mileage band

USOC / MILEAGE BAND	NON-PLAN	MONTHLY RATE[1] ZONE 1	ZONE 2	ZONE 3	
• 1YTXA					
0					
- Fixed	–	–	–	–	
- Per Mile	–	–	–	–	
• 1YTXB					
Over 0 to 8					
- Fixed	–	$186.43 (R)	$186.43 (R)	$186.43 (R)	
Vintage[2]		279.00	279.00		(N)
Vintage[3]				279.00	(N)
- Per Mile	–	39.00	39.00	39.00	
Vintage[4]		37.00	37.00	37.00	(T)
• 1YTXC					
Over 8 to 25					
- Fixed	–	201.77 (R)	201.77 (R)	201.77 (R)	
Vintage[2]		315.00	315.00		(N)
Vintage[3]				315.00	(N)
- Per Mile	–	25.15 (R)	25.15 (R)	25.15 (R)	
Vintage[2]		39.00	39.00		(N)
Vintage[3]				39.00	(N)
Vintage[4]		37.00	37.00	37.00	(T)

[1] Rates and charges for Non-Plan and Zones 1, 2 and 3 apply as set forth in 6.7.14.

[2] Vintage rate in effect 7/5/96 through 6/30/00. (N)
[3] Vintage rate in effect 7/1/98 through 6/30/00. (N)
[4] Vintage rate in effect 3/29/98 through 6/30/98. (T)

6. SWITCHED ACCESS SERVICE

6.8 RATES AND CHARGES
6.8.1 SWITCHED TRANSPORT

B. Direct-Trunked Transport

8. DTT DS3 Thirty-Six Months, per point of termination, per mileage band (Cont'd)

USOC / MILEAGE BAND	NON-PLAN	MONTHLY RATE[1] ZONE 1	ZONE 2	ZONE 3	
• 1YTXD					
Over 25 to 50					
- Fixed	–	$219.84 (R)	$219.84 (R)	$219.84 (R)	(T)
Vintage[2]		342.00	342.00		(N)
Vintage[3]				342.00	(N)
- Per Mile	–	25.72 (R)	25.72 (R)	25.72 (R)	
Vintage[2]		40.00	40.00		(N)
Vintage[3]				40.00	(N)
Vintage[4]		38.00	38.00	38.00	(T)
• 1YTXE					
Over 50					
- Fixed	–	238.39 (R)	238.39 (R)	238.39 (R)	
Vintage[2]		369.00	369.00		(N)
Vintage[3]				369.00	(N)
- Per Mile	–	28.91 (R)	28.91 (R)	28.91 (R)	
Vintage[2]		45.00	45.00		(N)
Vintage[3]				45.00	(N)
Vintage[4]		43.00	43.00	43.00	(T)

[1] Rates and charges for Non-Plan and Zones 1, 2 and 3 apply as set forth in 6.7.14.

[2] Vintage rate in effect 7/5/96 through 6/30/00. (N)
[3] Vintage rate in effect 7/1/98 through 6/30/00. (N)
[4] Vintage rate in effect 3/29/98 through 6/30/98. (T)

6. SWITCHED ACCESS SERVICE

6.8 RATES AND CHARGES
6.8.1 SWITCHED TRANSPORT

B. Direct-Trunked Transport (Cont'd)

9. DTT DS3 Sixty Months, per point of termination, per mileage band

USOC / MILEAGE BAND	NON-PLAN	MONTHLY RATE[1] ZONE 1	ZONE 2	ZONE 3	
• 1YTXA					
0					
- Fixed	–	–	–	–	
- Per Mile	–	–	–	–	
• 1YTXB					
Over 0 to 8					
- Fixed	–	$165.71 (R)	$165.71 (R)	$165.71 (R)	
Vintage[2]		248.00	248.00		(N)
Vintage[3]				248.00	(N)
- Per Mile	–	34.00	34.00	34.00	
Vintage[4]		32.00	32.00	32.00	(T)
• 1YTXC					
Over 8 to 25					
- Fixed	–	179.35 (R)	179.35 (R)	179.35 (R)	
Vintage[2]		280.00	280.00		(N)
Vintage[3]				280.00	(N)
- Per Mile	–	21.92 (R)	21.92 (R)	21.92 (R)	
Vintage[2]		34.00	34.00		(N)
Vintage[3]				34.00	(N)
Vintage[4]		32.00	32.00	32.00	(T)

[1] Rates and charges for Non-Plan and Zones 1, 2 and 3 apply as set forth in 6.7.14.

[2] Vintage rate in effect 7/5/96 through 6/30/00. (N)
[3] Vintage rate in effect 7/1/98 through 6/30/00. (N)
[4] Vintage rate in effect 3/29/98 through 6/30/98. (T)

6. SWITCHED ACCESS SERVICE

6.8 RATES AND CHARGES
6.8.1 SWITCHED TRANSPORT

B. Direct-Trunked Transport

9. DTT DS3 Sixty Months, per point of termination, per mileage band (Cont'd)

USOC / MILEAGE BAND	NON-PLAN	MONTHLY RATE[1] ZONE 1	ZONE 2	ZONE 3	
• 1YTXD					
Over 25 to 50					
- Fixed	–	$195.41 (R)	$195.41 (R)	$195.41 (R)	
Vintage[2]		304.00	304.00		(N)
Vintage[3]				304.00	(N)
- Per Mile	–	22.51 (R)	22.51 (R)	22.51 (R)	
Vintage[2]		35.00	35.00		(N)
Vintage[3]				35.00	(N)
Vintage[4]		33.00	33.00	33.00	(T)
• 1YTXE					
Over 50					
- Fixed	–	211.90 (R)	211.90 (R)	211.90 (R)	
Vintage[2]		328.00	328.00		(N)
Vintage[3]				328.00	(N)
- Per Mile	–	25.70 (R)	25.70 (R)	25.70 (R)	
Vintage[2]		40.00	40.00		(N)
Vintage[3]				40.00	(N)
Vintage[4]		38.00	38.00	38.00	(T)

[1] Rates and charges for Non-Plan and Zones 1, 2 and 3 apply as set forth in 6.7.14.

[2] Vintage rate in effect 7/5/96 through 6/30/00. (N)
[3] Vintage rate in effect 7/1/98 through 6/30/00. (N)
[4] Vintage rate in effect 3/29/98 through 6/30/98. (T)

6. SWITCHED ACCESS SERVICE

6.8 RATES AND CHARGES
6.8.1 SWITCHED TRANSPORT

B. Direct-Trunked Transport (Cont'd)

10. DTT DS3 One Hundred Twenty Months[2], per point of termination, per mileage band

USOC / MILEAGE BAND	NON-PLAN	MONTHLY RATE[1][2] ZONE 1	ZONE 2	ZONE 3	
• 1YTXA					
0					
- Fixed	–	–	–	–	
- Per Mile	–	–	–	–	
• 1YTXB					
Over 0 to 8					
- Fixed	–	$165.71 (R)	$165.71 (R)	$165.71 (R)	
Vintage[3]		248.00	248.00		(N)
Vintage[4]				248.00	(N)
- Per Mile	–	34.00	34.00	34.00	
Vintage[5]		32.00	32.00	32.00	(T)
• 1YTXC					
Over 8 to 25					
- Fixed	–	179.35 (R)	179.35 (R)	179.35 (R)	
Vintage[3]		280.00	280.00		(N)
Vintage[4]				280.00	(N)
- Per Mile	–	21.92 (R)	21.92 (R)	21.92 (R)	
Vintage[3]		34.00	34.00		(N)
Vintage[4]				34.00	(N)
Vintage[5]		32.00	32.00	32.00	(T)

[1] Rates and charges for Non-Plan and Zones 1, 2 and 3 apply as set forth in 6.7.14.
[2] 120 Mos. rate elements are for the billing of Shared Use only.

[3] Vintage rate in effect 7/5/96 through 6/30/00. (N)
[4] Vintage rate in effect 7/1/98 through 6/30/00. (N)
[5] Vintage rate in effect 3/29/98 through 6/30/98. (T)

6. SWITCHED ACCESS SERVICE

6.8 RATES AND CHARGES
6.8.1 SWITCHED TRANSPORT

B. Direct-Trunked Transport

10. DTT DS3 One Hundred Twenty Months[2], per point of termination, per mileage band (Cont'd)

USOC / MILEAGE BAND	NON-PLAN	MONTHLY RATE[1][2] ZONE 1	ZONE 2	ZONE 3	
• 1YTXD					
Over 25 to 50					
- Fixed	–	$195.41(R)	$195.41(R)	$195.41(R)	
Vintage[3]		304.00	304.00		(N)
Vintage[4]				304.00	(N)
- Per Mile	–	22.51 (R)	22.51 (R)	22.51 (R)	
Vintage[3]		35.00	35.00		(N)
Vintage[4]				35.00	(N)
Vintage[5]		33.00	33.00	33.00	(T)
• 1YTXE					
Over 50					
- Fixed	–	211.90 (R)	211.90 (R)	211.90 (R)	
Vintage[3]		328.00	328.00		(N)
Vintage[4]				328.00	(N)
- Per Mile	–	25.70 (R)	25.70 (R)	25.70 (R)	
Vintage[3]		40.00	40.00		(N)
Vintage[4]				40.00	(N)
Vintage[5]		38.00	38.00	38.00	(T)

[1] Rates and charges for Non-Plan and Zones 1, 2 and 3 apply as set forth in 6.7.14.
[2] 120 Mos. rate elements are for the billing of Shared Use only.

[3] Vintage rate in effect 7/5/96 through 6/30/00. (N)
[4] Vintage rate in effect 7/1/98 through 6/30/00. (N)
[5] Vintage rate in effect 3/29/98 through 6/30/98. (T)

6. SWITCHED ACCESS SERVICE

6.8 RATES AND CHARGES
6.8.1 SWITCHED TRANSPORT (Cont'd)

C. Tandem-Switched Transport

- Tandem Transmission Usage Rates

MILEAGE BANDS	RATE PER ACCESS MINUTE FIXED	RATE PER ACCESS MINUTE PER MILE
0 –	–	–
Over 0 to 8	$0.000199	$0.000020
Over 8 to 25	0.000255	0.000022 (R)
Over 25 to 50	0.000263	0.000019 (R)
Over 50	0.000265	0.000017 (R)

	RATE PER ACCESS MINUTE
• Tandem Switching Charge	$0.002989 (R)
• Common Transport Multiplexing	0.000030 (R)

	USOC	MONTHLY RATE
• Access Tandem Trunk Port Charge, Per Trunk	P4TRX	$5.24 (R)

6. SWITCHED ACCESS SERVICE

6.8 RATES AND CHARGES
6.8.1 SWITCHED TRANSPORT (Cont'd)

D. Nonrecurring Charges

1. Reserved for Future Use

	USOC	NONRECURRING CHARGE
2. Line or Trunk Installation		
a. Interface Groups 1 and 2		
• First line or trunk	NR61G	$446.82
• Each additional line or trunk	NR61K	77.40
b. Interface Group 6		
• First line or trunk	NR61H	412.28
• Each additional line or trunk	NR61L	42.64 (R)
c. Interface Group 9		
• First line or trunk	NR61J	409.32
• Each additional line or trunk	NR61M	40.34 (R)

6. SWITCHED ACCESS SERVICE

6.8 RATES AND CHARGES
6.8.1 SWITCHED TRANSPORT

D. Nonrecurring Charges (Cont'd)

3. Moves within the Same Serving Wire Center

	USOC	NONRECURRING CHARGE
a. Switched Access Service, per line or trunk associated with Interface Groups 1 and 2		
• First line or trunk	NR6SG	$318.17
• Each additional line or trunk	NR6SK	32.42
b. Switched Access Service, per line or trunk associated with Interface Group 6		
• First line or trunk	NR6SH	297.41
• Each additional line or trunk	NR6SL	10.43
c. Switched Access Service, per line or trunk associated with Interface Group 9		
• First line or trunk	NR6SJ	296.17
• Each additional line or trunk	NR6SM	9.10

6. SWITCHED ACCESS SERVICE

6.8 RATES AND CHARGES
6.8.1 SWITCHED TRANSPORT

D. Nonrecurring Charges (Cont'd)

4. Moves to a Different Serving Wire Center

	USOC	NONRECURRING CHARGE
a. Switched Access Service, per line or trunk associated with Interface Groups 1 and 2		
• First line or trunk	NR6DG	$369.87
• Each additional line or trunk	NR6DK	49.14
b. Switched Access Service per line or trunk associated with Interface Group 6		
• First line or trunk	NR6DH	335.00
• Each additional line or trunk	NR6DL	12.16
c. Switched Access Service per line or trunk associated with Interface Group 9		
• First line or trunk	NR6DJ	332.65
• Each additional line or trunk	NR6DM	9.68

6. SWITCHED ACCESS SERVICE

6.8 RATES AND CHARGES
6.8.1 SWITCHED TRANSPORT

D. Nonrecurring Charges (Cont'd)

5. Service Rearrangement

a. SS7 Out of Band Signaling (C)

(1) Service Order Rearrangement Charge

	USOC	NONRECURRING CHARGE	
• One-way transmission to SS7 CST3 or FGD two-way	NR6S1	$ 97.72	(C)
• Two-way transmission to SS7 CST3 or FGD two-way	NR6S2	97.72	(C)

(2) SS7 Trunk Rearrangement Charge (C)

(a) One-way transmission to SS7 CST3 or FGD two-way (C) (T)

• Per first trunk in a SS7 trunk group		
- Interface Groups 1 and 2	NR61U	180.34
- Interface Group 6	NR61V	176.44
- Interface Group 9	NR61W	176.44
• Per each additional trunk in a SS7 trunk group		
- Interface Groups 1 and 2	NR61X	15.18
- Interface Group 6	NR61Y	11.28
- Interface Groups 9	NR61Z	11.28

6. SWITCHED ACCESS SERVICE

6.8 RATES AND CHARGES
6.8.1 SWITCHED TRANSPORT

D.5.a.(2) (Cont'd)

(b) Two-way transmission to SS7 CST3 or FGD two-way

	USOC	NONRECURRING CHARGE
• Per first trunk in a SS7 trunk group		
- Interface Groups 1 and 2	NR62U	$152.81
- Interface Group 6	NR62V	148.91
- Interface Group 9	NR62W	148.91
• Per each additional trunk in a SS7 trunk group		
- Interface Groups 1 and 2	NR62X	12.39
- Interface Group 6	NR62Y	8.50
- Interface Group 9	NR62Z	8.50
b. CST3 or FGD Service with SS7 out of band signaling to CST3 or FGD Service with SS7 out of band signaling and Clear Channel Capability (BSE)		(M)
• Per first trunk		
- Interface Group 6	NR6RT	206.14
- Interface Group 9	NR6RU	204.66
• Per each additional trunk		
- Interface Group 6	NR6RV	22.44
- Interface Group 9	NR6RW	21.23 (M)

Certain material previously found on this page can now be found on Page 6-233.
Certain material on this page formerly appeared on Page 6-233.

6. SWITCHED ACCESS SERVICE

6.8 RATES AND CHARGES
6.8.1 SWITCHED TRANSPORT

D.5. (Cont'd)

	USOC	NONRECURRING CHARGE	
c. CST1, FGB, CST3 or FGD Tandem to Direct Routed Access			(M)
• Per first trunk in a Direct Routed Trunk Group			
- Interface Groups 1 and 2	NR6RF	$156.39	
- Interface Group 6	NR6RG	144.30	
- Interface Group 9	NR6RH	143.26	
• Per each additional trunk in a Direct Routed Trunk Group			
- Interface Groups 1 and 2	NR6RJ	27.09	
- Interface Group 6	NR6RK	15.71	
- Interface Group 9	NR6RL	14.86	(M)

Certain material previously found on this page can now be found on Page 6-232.
Certain material on this page formerly appeared on Page 6-232.

6. SWITCHED ACCESS SERVICE

6.8 RATES AND CHARGES
6.8.1 SWITCHED TRANSPORT

D.5. (Cont'd)

	USOC	NONRECURRING CHARGE	
			(M)
			(M)
d. Rollover Charges			(M)
• Voice Grade, per termination	NR6RE	57.76	(T) (T)
• DS1 or DS3, per DS1 or DS3 termination	NR6R1	See Below	(C) (C)

NONRECURRING CHARGE[1] (M)

NON-PLAN	ZONE 1	ZONE 2	ZONE 3	
$122.50	$122.50	$122.50	$122.50	(M)

[1] Rates and charges for Non-Plan and Zones 1, 2 and 3 apply as set forth in 6.7.14. (M)

Certain material on this page formerly appeared on Page 6-233.

6. SWITCHED ACCESS SERVICE

6.8 RATES AND CHARGES
6.8.1 SWITCHED TRANSPORT (Cont'd)

E. Optional Features

1. Multiple POTs Tandem Sectorization (MPTS) [1] (C)

	USOC	NONRECURRING CHARGE
• MPTS ASR (without associated trunk activity), per ASR	NR6TA	$ 46.32
• MPTS Establishment (without associated trunk activity)		
- Per CST2 or FGC sector	NR6TF	307.37
- Per CST3 or FGD sector	NR6TB	179.59
• MPTS Establishment (with associated trunk activity)		
- Per CST2 or FGC sector	NR6TG	307.37
- Per CST3 or FGD sector	NR6TC	179.59
• MPTS Rearrangement (without associated trunk activity)		
- Per CST2 or FGC sector	NR6TH	44.93
- Per CST3 or FGD sector	NR6TD	30.96
• MPTS Rearrangement (with associated trunk activity)		
- Per CST2 or FGC sector	NR6TJ	44.93
- Per CST3 or FGD sector	NR6TE	30.96

[1] Effective February 20, 1999, MPTS is limited to existing customers on existing MPTS trunk groups only. Customers with MPTS in service may augment existing MPTS trunk groups until the service is moved or disconnected. If the service is moved or disconnected, MPTS may not be reestablished. (C)

6. SWITCHED ACCESS SERVICE

6.8 RATES AND CHARGES
6.8.1 SWITCHED TRANSPORT

E. Optional Features (Cont'd)

	FID
2. Customer specification of the receive transmission level at the first point of switching within a range acceptable to the Company, per line or trunk[1]	TLV
3. Customer specification of Switched Transport Termination four-wire termination in lieu of two-wire termination, per line or trunk[2]	NC S+T+

	USOC	MONTHLY RATE
4. Self Healing Alternate Route Protection (SHARP)		
a. Monthly Charges		
• Per DS1 SHARP Facility	SHYGX	$ 53.00 (I)
• Per DS3 SHARP Facility	SHYHX	250.00

[1] Available with Interface Groups 2, 6 and 9. The range of transmission levels which may be specified is described in Technical Reference TR-NWT-000334.

[2] Available with CST1 and Feature Group B

6. SWITCHED ACCESS SERVICE

6.8 RATES AND CHARGES
6.8.1 SWITCHED TRANSPORT

E.4. (Cont'd)

b. Installation Charge

	USOC	NONRECURRING CHARGE
• Per trunk associated with Interface Group 6 DS1 SHARP facility		
- First trunk	NR61A	$491.05
- Each additional	NR61B	57.25
• Per trunk associated with Interface Group 9 DS3 SHARP facility		
- First trunk	NR61C	491.05
- Each additional	NR61D	53.45

6. SWITCHED ACCESS SERVICE

6.8 RATES AND CHARGES
6.8.1 SWITCHED TRANSPORT

E. Optional Features (Cont'd)

5. Multiplexing

a. Entrance Facility - DS1 to Voice Grade,
per multiplexing arrangement[2], per fixed period

USOC

- Monthly MKW1X
- 36 Months MKW1X
- 60 Months MKW1X

NONRECURRING CHARGE[1][2]

	NON-PLAN	ZONE 1	ZONE 2	ZONE 3
- Per DS1 to VG	$75.00	$75.00	$75.00	$75.00

MONTHLY RATE[1][2]

	NON-PLAN	ZONE 1	ZONE 2	ZONE 3	
- Monthly	$235.27 (R)	$235.27 (R)	$235.27 (R)	$235.27 (R)	
- 36 Mos. –		216.44 (R)	216.44 (R)	216.44 (R)	(T)
Vintage[3]		230.00	230.00	230.00	(N)
Vintage[4]		215.00	215.00	215.00	(T)
- 60 Mos. –		188.21 (R)	188.21 (R)	188.21 (R)	(T)
Vintage[3]		200.00	200.00	200.00	(N)

[1] Rates and charges for Non-Plan and Zones 1, 2 and 3 apply as set forth in 6.7.14.
[2] Nonrecurring charges apply when the MUX is not installed at the same time as an Entrance Facility or a DTT facility.

[3] Vintage rate in effect 7/1/98 through 6/30/00. (N)
[4] Vintage rate in effect 7/5/96 through 6/30/98. (T)

6. SWITCHED ACCESS SERVICE

6.8 RATES AND CHARGES
6.8.1 SWITCHED TRANSPORT

E.5. (Cont'd)

b. Entrance Facility - DS3 to DS1, per multiplexing arrangement, per fixed period

	USOC		USOC
• Monthly	MKW3X	• 36 Months	MKW3X
• 12 Months	MKW3X	• 60 Months	MKW3X
• 24 Months	MKW3X	• 120 Months	MKW3X

NONRECURRING CHARGE[1][2]

	NON-PLAN	ZONE 1	ZONE 2	ZONE 3
• Per DS3 to DS1	$200.00	$200.00	$200.00	$200.00

MONTHLY RATE[1][2][3]

	NON-PLAN	ZONE 1	ZONE 2	ZONE 3	
• Monthly	$280.41 (R)	$280.41 (R)	$280.41 (R)	$280.41 (R)	
• 12 Mos.	–	271.06 (R)	271.06 (R)	271.06 (R)	(T)
- Vintage[4]		290.00	290.00	290.00	(N)
- Vintage[5]		246.00	246.00	246.00	(T)
- Vintage[6]		247.00	247.00	247.00	(T)
• 24 Mos.	–	266.39 (R)	266.39 (R)	266.39 (R)	(T)
- Vintage[4]		285.00	285.00	285.00	(N)
- Vintage[5]		239.00	239.00	239.00	(T)
- Vintage[6]		240.00	240.00	240.00	(T)

[1] Rates and charges for Non-Plan and Zones 1, 2 and 3 apply as set forth in 6.7.14.
[2] Nonrecurring charges apply when the MUX is not installed at the same time as an Entrance Facility or a DTT facility.
[3] 12, 24 and 120 Mos. rate elements are for the billing of Shared Use only.

[4] Vintage rate in effect 7/1/98 through 6/30/00. (N)
[5] Vintage rate in effect 3/29/98 through 4/1/98. (T)
[6] Vintage rate in effect 4/2/98 through 6/30/98. (T)

Certain material previously found on this page can now be found on Page 6-237.1.1.

6. SWITCHED ACCESS SERVICE

6.8 RATES AND CHARGES (M)
6.8.1 SWITCHED TRANSPORT (M)
E.5.b. (Cont'd) (M-T)

	MONTHLY RATE[1][2][3]				(M)
	NON-PLAN	ZONE 1	ZONE 2	ZONE 3	
• 36 Mos.	–	$252.37 (R)	$252.37 (R)	$252.37 (R)	
- Vintage[4]		270.00	270.00	270.00	(N)
- Vintage[5]		229.00	229.00	229.00	(T)
- Vintage[6]		230.00	230.00	230.00	(T)
• 60 Mos.	–	224.33 (R)	224.33 (R)	224.33 (R)	(T)
- Vintage[4]		240.00	240.00	240.00	(N)
- Vintage[5]		203.00	203.00	203.00	(T)
- Vintage[6]		204.00	204.00	204.00	(T)
• 120 Mos.	–	224.33 (R)	224.33 (R)	224.33 (R)	(T)
- Vintage[4]		240.00	240.00	240.00	(N)
- Vintage[5]		203.00	203.00	203.00	(T)
- Vintage[6]		204.00	204.00	204.00	(T)

[1] Rates and charges for Non-Plan and Zones 1, 2 and 3 apply as set forth in 6.7.14.
[2] Nonrecurring charges apply when the MUX is not installed at the same time as an Entrance Facility or a DTT facility.
[3] 12, 24 and 120 Mos. rate elements are for the billing of Shared Use only. (M)

[4] Vintage rate in effect 7/1/98 through 6/30/00. (N)
[5] Vintage rate in effect 3/29/98 through 4/1/98. (T-M)
[6] Vintage rate in effect 4/2/98 through 6/30/98. (T-M)

Certain material on this page formerly appeared on Page 6-237.1

6. SWITCHED ACCESS SERVICE

6.8 RATES AND CHARGES
6.8.1 SWITCHED TRANSPORT

E.5. (Cont'd)

c. Direct-Trunked Transport Facility - DS1 to Voice Grade, per multiplexing arrangement[2], per fixed period

	USOC
• Monthly	M6W1X
• 36 Months	M6W1X
• 60 Months	M6W1X

NONRECURRING CHARGE[1][2]

	NON-PLAN	ZONE 1	ZONE 2	ZONE 3
- Per DS1 to VG	$75.00	$75.00	$75.00	$75.00

MONTHLY RATE[1][2]

	NON-PLAN	ZONE 1	ZONE 2	ZONE 3	
- Monthly	$235.27 (R)	$235.27 (R)	$235.27 (R)	$235.27 (R)	
- 36 Mos.	–	216.44 (R)	216.44 (R)	216.44 (R)	(T)
Vintage[3]	–	230.00	230.00	230.00	(N)
- 60 Mos.	–	188.21 (R)	188.21 (R)	188.21 (R)	(T)
Vintage[3]	–	200.00	200.00	200.00	(N)

[1] Rates and charges for Non-Plan and Zones 1, 2 and 3 apply as set forth in 6.7.14.
[2] Nonrecurring charges apply when the MUX is not installed at the same time as an Entrance Facility or a DTT facility.

[3] Vintage rate in effect 7/1/98 through 6/30/00. (N)

6. SWITCHED ACCESS SERVICE

6.8 RATES AND CHARGES
6.8.1 SWITCHED TRANSPORT

E.5. (Cont'd)

d. Direct-Trunked Transport Facility - DS3 to DS1, per multiplexing arrangement, per fixed period

	USOC		USOC
• Monthly	M6W3X	• 36 Months	M6W3X
• 12 Months	M6W3X	• 60 Months	M6W3X
• 24 Months	M6W3X	• 120 Months	M6W3X

NONRECURRING CHARGE[1][2]

	NON-PLAN	ZONE 1	ZONE 2	ZONE 3
• Per DS3 to DS1	$200.00	$200.00	$200.00	$200.00

MONTHLY RATE[1][2][3]

	NON-PLAN	ZONE 1	ZONE 2	ZONE 3	
• Monthly	$280.41 (R)	$280.41 (R)	$280.41 (R)	$280.41 (R)	
• 12 Mos.	–	271.06 (R)	271.06 (R)	271.06 (R)	(T)
- Vintage[4]		290.00	290.00	290.00	(N)
- Vintage[5]		246.00	246.00	246.00	(T)
- Vintage[6]		247.00	247.00	247.00	(T)
• 24 Mos.	–	266.39 (R)	266.39 (R)	266.39 (R)	(T)
- Vintage[4]		285.00	285.00	285.00	(N)
- Vintage[5]		239.00	239.00	239.00	(T)
- Vintage[6]		240.00	240.00	240.00	(T)

[1] Rates and charges for Non-Plan and Zones 1, 2 and 3 apply as set forth in 6.7.14.
[2] Nonrecurring charges apply when the MUX is not installed at the same time as an Entrance Facility or a DTT facility.
[3] 12, 24 and 120 Mos. rate elements are for the billing of Shared Use only.

[4] Vintage rate in effect 7/1/98 through 6/30/00. (N)
[5] Vintage rate in effect 3/29/98 through 4/1/98. (T)
[6] Vintage rate in effect 4/2/98 through 6/30/98. (T)

Certain material previously found on this page can now be found on Page 6-237.3.1.

6. SWITCHED ACCESS SERVICE

6.8 RATES AND CHARGES (M)
6.8.1 SWITCHED TRANSPORT (M)
E.5.d. (Cont'd) (M-T)

	MONTHLY RATE[1][2][3]				(M)
	NON-PLAN	ZONE 1	ZONE 2	ZONE 3	
• 36 Mos.	–	$252.37 (R)	$252.37 (R)	$252.37 (R)	
- Vintage[4]		270.00	270.00	270.00	(N)
- Vintage[5]		229.00	229.00	229.00	(T)
- Vintage[6]		230.00	230.00	230.00	(T)
• 60 Mos.	–	224.33 (R)	224.33 (R)	224.33 (R)	(T)
- Vintage[4]		240.00	240.00	240.00	(N)
- Vintage[5]		203.00	203.00	203.00	(T)
- Vintage[6]		204.00	204.00	204.00	(T)
• 120 Mos.	–	224.33 (R)	224.33 (R)	224.33 (R)	(T)
- Vintage[4]		240.00	240.00	240.00	(N)
- Vintage[5]		203.00	203.00	203.00	(T)
- Vintage[6]		204.00	204.00	204.00	(T)

[1] Rates and charges for Non-Plan and Zones 1, 2 and 3 apply as set forth in 6.7.14.
[2] Nonrecurring charges apply when the MUX is not installed at the same time as an Entrance Facility or a DTT facility.
[3] 12, 24 and 120 Mos. rate elements are for the billing of Shared Use only. (M)

[4] Vintage rate in effect 7/1/98 through 6/30/00. (N)
[5] Vintage rate in effect 3/29/98 through 4/1/98. (T-M)
[6] Vintage rate in effect 4/2/98 through 6/30/98. (T-M)

Certain material on this page formerly appeared on Page 6-237.3.

6. SWITCHED ACCESS SERVICE

6.8 RATES AND CHARGES
6.8.1 SWITCHED TRANSPORT (Cont'd)

F. Dedicated Network Access Link

	USOC	NONRECURRING CHARGE	MONTHLY RATE	
• DNAL Transport Facility				
- Make Busy Arrangement (Per Facility)				
0 to 8 miles	D5FAA	–	$ 66.96	
Over 8 to 25 miles	D5FAB	–	70.52	
Over 25 to 50 miles	D5FAC	–	78.84	
Over 50 miles	D5FAD	–	114.40	
- BCLID, MDS or MDSI (Per Facility)				(C)
0 to 8 miles	D5FBA	–	80.44	
Over 8 to 25 miles	D5FBB	–	84.00	
Over 25 to 50 miles	D5FBC	–	92.32	
Over 50 miles	D5FBD	–	127.89	
• DNAL Transport Termination (Per Point of Termination)				
- Make Busy	D5TAX	$422.08	5.71	
- BCLID MDS or MDSI	D5TBX	414.62	20.23	(C)

6. SWITCHED ACCESS SERVICE

6.8 RATES AND CHARGES (Cont'd)

6.8.2 LOCAL SWITCHING

A. Local End Office Switching	RATE PER ACCESS MINUTE
1. Premium Rates	
• LS1 - Feature Groups A and B, and Bundled *DID*[1]	$0.002342 (R)
• LS2 - Feature Groups C and D[2]	0.002342 (R)
• LS3 - CSL, CST1 and Unbundled *DID*[3]	0.002273 (R)
• LS4 - CST2 and CST3[4]	0.002273 (R)
2. Transitional Rates	
• Per Access Minute for Feature Groups and Bundled *DID*	0.001054 (R)
• Per Access Minute for CSL, CST1 and Unbundled *DID*	0.001023 (R)

[1] Except for FGA, and FGB used to terminate traffic to a WATS Access Line provided from an equal access end office. *DID* available only in ID (Spokane LATA), OR, WA.

[2] And FGA and FGB used to terminate traffic to a WATS Access Line provided from an equal access end office.

[3] Except for CSL and CST1 used to terminate traffic to a WATS Access Line provided from an equal access end office. *DID* available only in ID (Spokane LATA), OR, WA.

[4] And CSL and CST1 used to terminate traffic to a WATS Access Line provided from an equal access end office.

6. SWITCHED ACCESS SERVICE

6.8 RATES AND CHARGES

6.8.2 LOCAL SWITCHING

A. Local End Office Switching (Cont'd)

		RATE PER ACCESS MINUTE
3. End Office Shared Port		$0.000903 (R)

	USOC	MONTHLY RATE
4. End Office Dedicated Trunk Port, Per Trunk	P4TWX	$6.50 (R)

6. SWITCHED ACCESS SERVICE

6.8 RATES AND CHARGES
6.8.2 LOCAL SWITCHING (Cont'd)

	USOC	NONRECURRING CHARGE
B. BSE Order Charge, per Subsequent Order	NR4BS	$125.25
C. Common Switching Optional Features and BSEs		
		FID
1. Call Denial on line or hunt group (available with CSL and FGA), per line		CAD
2. Service Code Denial on line or hunt group (available with CSL and FGA), per line		SCD
3. Hunt Group Arrangement (available with FGA), per line		HML/HTG

	USOC	NONRECURRING CHARGE	MONTHLY RATE
Hunt Group Arrangement (BSE) (available with CSL) per line	HSHPT	–	$0.04

6. SWITCHED ACCESS SERVICE

6.8 RATES AND CHARGES
6.8.2 LOCAL SWITCHING

C. Common Switching Optional Features and BSEs (Cont'd)

		FID
4. Uniform Call Distribution Arrangement (available with FGA), per line		HTY UD

	USOC	NONRECURRING CHARGE	MONTHLY RATE
Uniform Call Distribution Arrangement (BSE) (available with CSL), per line	UMH	–	$0.42

	FID
5. Nonhunting Number for use with Hunt Group Arrangement or Uniform Call Distribution Arrangement (available with CSL and FGA), per line	NHN
6. Automatic Number Identification (available with FGB, FGC and FGD), per trunk group[1]	ANI

[1] MF Signaling or SS7 Out of Band Signaling.

6. SWITCHED ACCESS SERVICE

6.8 RATES AND CHARGES
6.8.2 LOCAL SWITCHING
C.6. (Cont'd)

	USOC	NONRECURRING CHARGE	RECURRING RATE
Automatic Number Identification (BSE) (available with CST1, CST2 and CST3)[1]			
• Per Call with CST1, CST2 and CST3		–	$0.000069
• Per trunk group with CST1 and CST2[2]	NR4AA	$286.42	–
• Per CIC Code, per trunk group with CST3[2]	NR4AB	47.47	–

Flexible Automatic Number Identification (BSE)

(Available with ANI Optional Feature on FGD or ANI (BSE) on CST3)

	USOC	NONRECURRING CHARGE	
• With associated trunk activity, per CIC Code, per end office[3]	NR4FA	$1,177.45	(C)
• Without associated trunk activity, per CIC Code per, end office[3]	NR4FB	1,224.35	(C)

[1] MF Signaling or SS7 Out of Band Signaling.

[2] Nonrecurring charges apply on subsequent orders only.

[3] Nonrecurring charges apply only to customer's ordering Flexible ANI for purposes other than determination of payphone compensation to Payphone Service Providers. (N) (N)

6. SWITCHED ACCESS SERVICE

6.8 RATES AND CHARGES
6.8.2 LOCAL SWITCHING

C. Common Switching Optional Features and BSEs (Cont'd)

		FID	
7. Up to 7-Digit Outpulsing of Access Digits to customer (available with CST1, FGB and bundled *DID*), per trunk group		USDO	
	USOC	**NONRECURRING CHARGE**	**MONTHLY RATE**
• Called Directory Number Delivery (BSE) (available with unbundled *DID*), per trunk termination	OPZPT	$37.66	$0.54 (I)
		FID	
8. Cut-Through (available with CST3 and FGD), per end office or access tandem		CTO	

6. SWITCHED ACCESS SERVICE

6.8 RATES AND CHARGES
6.8.2 LOCAL SWITCHING

C. Common Switching Optional Features and BSEs (Cont'd)

	FID
9. Delay Dial Start-Pulsing Signaling (available with CST2 and FGC), per trunk group[1]	DDSP
10. Immediate Dial-Pulse Address Signaling (available with CST2 and FGC), per trunk group	ADS IDP
11. Dial-Pulse Address Signaling (available with CST2 and FGC), per trunk group	ADS DP
12. Revertive Pulse Address Signaling (available with CST2 and FGC), per trunk group[2]	ADS RP
13. Service Class Routing (available with CST2, CST3, FGC and FGD), per trunk group	SCRT

[1] Not available in OR, WA.

[2] Available with existing service only.

6. SWITCHED ACCESS SERVICE

6.8 RATES AND CHARGES
6.8.2 LOCAL SWITCHING

C. Common Switching Optional Features and BSEs (Cont'd)

	FID	
14. Alternate Traffic Routing		
• Multiple Customer Premises Alternate Routing (available with FGB, FGC and FGD), per trunk group	ARTG	
• End Office Alternate Routing when ordered in trunks (available with FGB, FGC and FGD - Per trunk - Per trunk group	ARTG	
• End Office Alternate Routing to a customer-provided tandem premises, FGD only - Per trunk - Per trunk group	ARTG	(N) (N)

	USOC	NONRECURRING CHARGE	RECURRING RATE	
Alternate Traffic Routing (BSE)				
• Multiple Customer Premises Alternate Routing (available with CST1, CST2 and CST3), per trunk group[1]	NR4AS	$153.01	–	
• End Office Alternate Routing (available with CST1, CST2 and CST3), per trunk group[1]	NR4AT	153.01	–	
• End Office Alternate Routing to a customer-provided tandem premises, CST3 only, per trunk group[1]	NR4AU	153.01	–	(N) (N)

[1] Nonrecurring charges apply on subsequent orders only.

6. SWITCHED ACCESS SERVICE

6.8 RATES AND CHARGES
6.8.2 LOCAL SWITCHING

C. Common Switching Optional Features and BSEs (Cont'd)

	FID
15. Trunk Access Limitation Arrangement (available with CST2, CST3, FGC and FGD), per end office	CHOK
16. International Carrier Option (available with CST3 and FGD), per end office and access tandem	INCO
17. Band Advance for use with WATS Access Service (available with CSL, CST1, CST2, CST3, FGA, FGB, FGC and FGD), per hunt or trunk group	BAAD
18. Reserved for Future Use	
19. End Office End User Line Screening for use with WATS Access Service (available with CST2, CST3, FGC and FGD), per line	BAND

[1] Available with existing services only.

6. SWITCHED ACCESS SERVICE

6.8 RATES AND CHARGES
6.8.2 LOCAL SWITCHING

C. Common Switching Optional Features and BSEs (Cont'd)

	FID
20. Hunt Group for use with WATS Access Service (available with CSL, CST1, CST2, CST3, FGA, FGB, FGC and FGD), per hunt group	HML/HTG
21. Uniform Call Distribution for use with WATS Access Service (available with CSL, CST1, CST2, CST3, FGA, FGB, FGC and FGD), per hunt group	HTY UD
22. Nonhunting Number for use with Hunt Group or Uniform Call Distribution for use with WATS Access Service (available with CSL, CST1, CST2, CST3, FGA, FGB, FGC and FGD), per line	NHN

	USOC	NONRECURRING CHARGE	MONTHLY RATE
23. Call Transfer (BSE) (available with CSL and FGA), per line	EO3	–	$0.33
24. Three-Way Calling (BSE) (available with CSL and FGA), per line	ESC	–	0.14
25. Caller Identification - Number (BSE) (available with CSL and FGA), per line (calling number only)	NUB	–	0.09

6. SWITCHED ACCESS SERVICE

6.8 RATES AND CHARGES 6
6.8.2 LOCAL SWITCHING

C. Common Switching Optional Features and BSEs (Cont'd)

	USOC	NONRECURRING CHARGE	MONTHLY RATE	
26. Caller Identification - Bulk (BSE) (available with CSL and FGA)[1]				
• Call Data Input/Output Central Office Facility, each	FCX	$327.19	$220.88	(Z)
• Per multiline hunt group Terminating in Call Data I/O CO Facility	NSEHG	89.32	7.62	
27. Message Delivery Service (BSE) and Message Delivery Service - Interoffice (BSE) (available with CSL and FGA)[1]				(C) (C)
• Call Data Input/Output Central Office Facility, each	FCX	327.19	220.88	
• MDS Arrangement, per multiline hunt group terminating in an I/O CO Facility	FCXPA	142.50	8.79	(T) (T)
• MDS Call Data, per line	MBH		0.84	(T)
• MDSI Arrangement, per multiline hunt group terminating in an I/O CO Facility	FHGPA	275.00	13.00	(N)
• Call Data - Interoffice, per line	M4H	6.00	55.00	(N)

[1] These rates are in addition to the rates for the associated DNAL.

(Filed under Transmittal No 675.)

6. SWITCHED ACCESS SERVICE

6.8 RATES AND CHARGES
6.8.2 LOCAL SWITCHING

C. Common Switching Optional Features and BSEs (Cont'd)

	USOC	NONRECURRING CHARGE	MONTHLY RATE	
28. *DID* Trunk Queuing (BSE) (available with *DID*)				
• Per *DID* number equipped	UQT	–	$ 6.69	
• Per queue group	UQTPG	$149.20	–	
a. Delay Announcement				
• Standardized announcement, per announcement in announcement sequence	RED1X	102.41	63.48	(S-y)
b. Changes				
• Change in quantity of calls held in queue, per group	REAH3	142.42	–	
• Change from or to ringing or silence after announcements, change in amount of time calls are held in queue or change in amount of time between announcements	REAAY	142.42	–	(S-y)
29. Make Busy (BSE) (available with CSL and FGA), per line and/or group[1]	DXV	–	1.11	

[1] These rates are in addition to the rates for the associated DNAL.

(y) Reissued matter filed under Transmittal No. 506 to become effective August 22, 1994.

6. SWITCHED ACCESS SERVICE

6.8 RATES AND CHARGES
6.8.2 LOCAL SWITCHING

C. Common Switching Optional Features and BSEs (Cont'd)

	USOC	NONRECURRING CHARGE	MONTHLY RATE	
30. Call Forwarding - Variable (BSE) (available with CSL and FGA), per line	ESM	–	$ 0.02	
31. Queuing For Use With UCD (BSE) (available with CSL and FGA), per multiline hunt group	UQGPG	$142.42	6.15	
a. Delay Announcement				
• Standardized announcement, per announcement in announcement sequence	RED2X	102.41	60.98	(S-y)
b. Changes				
• Change in quantity of calls held in queue, per group	REAAJ	142.42	–	
• Change from or to ringing or silence after announcements, change in amount of time calls are held in queue or change in amount of time between announcements	REAAZ	142.42	–	(S-y)
32. Clear Channel Capability (BSE) (available with CST3 or FGD), per trunk group	NR4CA	25.00	–	

(y) Reissued matter filed under Transmittal No. 506 to become effective August 22, 1994.

(Instant revisions filed under Transmittal No. 513 pursuant to Special Permission No. 94-857.)

6. SWITCHED ACCESS SERVICE

6.8 RATES AND CHARGES
6.8.2 LOCAL SWITCHING (Cont'd)

D. Transport Termination Optional Features

	FID
1. Line Side Terminations (available with CSL and FGA)	
• Two Way Operation	
- Dial Pulse with Loop Start	NC +++A
- Dial Pulse with Ground Start	NC +++E
- DTMF with Loop Start	NC +++F
- DTMF with Ground Start	NC +++G
• Terminating Operation	
- Dial Pulse with Loop Start	NC +++N
- Dial Pulse with Ground Start	NC +++P
- DTMF with Loop Start	NC +++R
- DTMF with Ground Start	NC +++S
• Originating Operation	
- Loop Start	NC +++U
- Ground Start	NC +++V

6. SWITCHED ACCESS SERVICE

6.8 RATES AND CHARGES
6.8.2 LOCAL SWITCHING

D. Transport Termination Optional Features (Cont'd)

	FID	
2. Trunkside Terminations		
• Standard Trunk or Originating, (available with Trunkside Access)	TTC SO	
• Terminating (available with Trunkside Access)	TTC ST	
• Two Way (available with Trunkside Access)[1]	TTC TY	(T)
• Operator Trunk, Coin, Non-Coin or Combined Coin and Non-Coin (available with CST2, CST3, FGC and FGD)	TTC CO	
• Operator Trunk, Full Feature Arrangement (available with CST3 and FGD)	TTC FF	

[1] Two-Way Trunkside Termination is not available on CST3 or FGD Service routed via a customer-provided tandem premises. (N) (N)

6. SWITCHED ACCESS SERVICE

6.8 RATES AND CHARGES
6.8.2 LOCAL SWITCHING (Cont'd)

E. Line Termination Optional Features and BSEs

	USOC	MONTHLY RATE
1. Answer Supervision - Lineside (BSE) (available with CSL and FGA), per line	USW1X	$0.02
2. WATS Access Line Termination Options		
		FID
a. Line Side Terminations		
• Originating only loop-start, lineside connection, with DTMF address signaling per WATS Access Line		NC +++R
• Originating only loop-start, lineside connection, with dial-pulse address signaling per WATS Access Line		NC +++N
• Originating only ground-start, lineside connection, with DTMF address signaling per WATS Access Line		NC +++S
• Originating only ground start, lineside connection, with dial-pulse address signaling, per WATS Access Line		NC +++P (M)
• Terminating only loop start, lineside connection, per WATS Access Line		NC +++U
• Terminating only ground start, lineside connection, per WATS Access Line		NC +++V (M)

Certain material on this page formerly appeared on Page 6-254.

6. SWITCHED ACCESS SERVICE

6.8 RATES AND CHARGES
6.8.2 LOCAL SWITCHING

E.2.(Cont'd) (T)

	FID	
b. Trunkside Terminations:		(T)
Terminating only trunkside connection for forwarding of Dialed Number Identification to end user, per WATS Access Line	NC +++T	(T)

	USOC	NONRECURRING CHARGE	MONTHLY RATE	(M)
c. Answer Supervision				
• Originating only trunkside connection with Answer Supervision, with loop start dial tone using dial-pulse (DP) or Touch-Tone (DTMF) or Multifrequency (MF) Signaling				
- Per first line or trunk, two-wire[1]	UAS1X	$202.33	$19.90	
- Per each additional line or trunk, two-wire[1]	UASAX	103.16	19.90	
- Per first line or trunk, four-wire[2]	UAT1X	202.33	42.01	
- Per each additional line or trunk, four-wire[2]	UATAX	103.16	42.01	(M)

[1] Not available in AZ, CO, ID (Boise LATA), MT, NM, UT, WY (M)

[2] Not available in AZ, CO, ID (Boise LATA), MT, NM, UT, WY, IA, MN, NE, ND, SD (M)

Certain material on this page formerly appeared on Page 6-255.
Certain material previously found on this page can now be found on Page 6-253.

6. SWITCHED ACCESS SERVICE

6.8 RATES AND CHARGES
6.8.2 LOCAL SWITCHING (Cont'd)

F. 500 Access Service

	USOC	NONRECURRING CHARGE
• Activation, per NXX code, per required point of six-digit translation	NRB5F	$ 35.00 (R)
• Route Pattern, per required end office/tandem	NRB5B	30.00 (R)
		RECURRING CHARGE
• Carrier Identification Charge, per call		$0.005602

G. Carrier Identification Parameter (S-y)

		NONRECURRING CHARGE	
• Nonrecurring Charge, per access order	NRB1C	$ 48.00	
		MONTHLY RATE	
• Per CST3 or FG D Trunk, per month	U7CPT	$ 0.45	(S-y)

(y) Reissued material filed under Transmittal No. 942 effective September 15, 1998.

6. SWITCHED ACCESS SERVICE

6.8 RATES AND CHARGES (Cont'd)

6.8.3 RESERVED FOR FUTURE USE (T)

(D)

(D)

6. SWITCHED ACCESS SERVICE

6.8 RATES AND CHARGES (Cont'd)

6.8.4 MESSAGE UNIT CREDIT

	RATE PER ORIGINATING CSL AND FGA ACCESS MINUTE[1]
Arizona	$(0.000116) (R)
Colorado	(0.000144) |
Idaho (Boise LATA)	(0.000132) (R)
Idaho (Spokane LATA)	(0.000039) (I)
Iowa	(0.000206) (R)
Minnesota	(0.000249) |
Montana	(0.000313) |
Nebraska	(0.000212) |
New Mexico	(0.000837) |
North Dakota	(0.000120) |
Oregon	(0.000407) |
South Dakota	(0.000319) |
Utah	(0.000098) |
Washington	(0.000116) |
Wyoming	(0.000121) (R)

[1] () equals a negative amount.

6. SWITCHED ACCESS SERVICE

6.8 RATES AND CHARGES (Cont'd)

6.8.5 RESERVED FOR FUTURE USE

6.8.6 900 ACCESS SERVICE

	USOC	NONRECURRING CHARGE
• Per first NXX, per end office/ tandem	N9E	$101.71
• Per each subsequent NXX, per end office/tandem	N9G1X	23.86
• Expanded 900 Option, per end office/tandem with NXX activity (available with CST3 and FGD)	N98AX	874.81
• Expanded 900 Option, per end office/tandem without NXX activity (available with CST3 and FGD)	N98BX	950.88
		RECURRING CHARGE
• 900 Customer Identification Charge		$0.000994

6. SWITCHED ACCESS SERVICE

6.8 RATES AND CHARGES (Cont'd)

6.8.7 SWITCHED DATA SERVICE

	USOC	NONRECURRING CHARGE
• Per trunk associated with Interface Group 6		
- First trunk	NR61N	$501.36
- Each additional	NR61P	64.43
• Per trunk associated with Interface Group 9		
- First trunk	NR61Q	498.03
- Each additional	NR61R	61.57

6.8.8 INFORMATION SURCHARGE

	RATE PER ACCESS MINUTE
• Premium	$0.000000 (R)
• Transitional	0.000000 (R)

6. SWITCHED ACCESS SERVICE

6.8 RATES AND CHARGES (Cont'd)

6.8.9 800 DB SERVICE

	RATE PER CALL/QUERY
• 800 Carrier Identification Charge, per call	$0.003407 (I)
• Vertical Features	
- POTS Translation Charge, per call	0.0006915
- Call Handling & Destination Feature Charge, per query	0.0006675

.