ACCESS SERVICE

Regulations, Rates and Charges
applying to the provision of Access Services
within a Local Access and Transport Area (LATA) or
equivalent Market Area for connection to interstate
communications facilities for Interstate Customers within the
operating territories of Issuing Carriers in the attached Title Pages.

All material contained herein is new.

Access Services are provided by means of wire, fiber optics, radio or any other suitable technology or a combination thereof.

This tariff is filed under authority of Special Permission No. 93-598 of the Federal Communications Commission.

Emmanuel Staurulakis
Vice President - Operations
6315 Seabrook Road, Seabrook, Maryland 20706

ISSUING CARRIERS

NAME OF COMPANY	PREVIOUS TARIFF CANCELLED
Warwick Valley Telephone Company (NY) [Cancellation Effective September 1, 1993]	TARIFF F.C.C. NO. 1
Concord Telephone Company (SC) [Cancellation Effective July 1, 1994]	TARIFF F.C.C. NO. 1
Atlantic Telephone Membership Corporation (NC) [Cancellation Effective August 1, 1994]	TARIFF F.C.C. NO. 1
Coastal Utilities, Inc. (GA) [Cancellation Effective August 1, 1994]	TARIFF F.C.C. NO. 1
Farmers Telephone Cooperative, Inc. (SC) [Cancellation Effective August 1, 1994]	TARIFF F.C.C. NO. 1
Hargray Telephone Company, Inc. (SC) [Cancellation Effective August 1, 1994]	TARIFF F.C.C. NO. 1
Horry Telephone Cooperative, Inc. (SC) [Cancellation Effective August 1, 1994]	TARIFF F.C.C. NO. 1
Millington Telephone Company, Inc. (TN) [Cancellation Effective August 1, 1994]	TARIFF F.C.C. NO. 1
Mt. Horeb Telephone Company (WI) [Cancellation Effective August 1, 1994]	TARIFF F.C.C. NO. 1
Pineland Telephone Cooperative, Inc. (GA) [Cancellation Effective August 1, 1994]	TARIFF F.C.C. NO. 2
Rock Hill Telephone Company (SC)	
Lancaster Telephone Company (SC)	
Fort Mill Telephone Company (SC)	
Home Telephone Company (SC)	
Star Telephone Membership Corporation (SC)	
	(D)
Interstate Telephone Company (GA)	
Smart City Telecommunications LLC d/b/a Smart City Telecom (FL)	

ACCESS SERVICE

CHECK SHEET

Title Page 1 to 17-709 of this tariff and Supplements No. 7 and 8 are effective as of the date shown. Original and revised pages as named below contain all changes that are in effect on the date hereof.

Page	Number of Revision Except as Indicated	Page	Number of Revision Except as Indicated	Page	Number of Revision Except as Indicated
Title	Original	0-24.14	1st	2-27	1st
Title 2	17th	0-24.15	Original	2-27.1	Original
0-1	93rd*	0-24.16	2nd	2-28	Original
0-1.1	8th	0-24.17	2nd	2-29	Original
0-2	21st	0-24.18	2nd	2-30	Original
0-3	24th	0-24.19	4th	2-31	Original
0-4	46th	0-25	1st	2-32	1st
0-4.1	36th	0-26	1st	2-32.1	Original
0-4.2	35th	0-27	1st	2-32.2	Original
0-4.3	43rd	0-27.1	Original	2-33	1st
0-4.4	28th	0-28	1st	2-33.1	Original
0-4.5	25th	0-29	1st	2-34	3rd
0-4.6	17th*	0-30	1st	2-35	Original
0-4.7	2nd	0-31	Original	2-36	1st
0-5	Original	0-32	1st	2-37	2nd
0-6	1st	1-1	1st	2-38	Original
0-7	7th	2-1	Original	2-39	Original
0-7.1	1st	2-2	Original	2-40	Original
0-8	3rd	2-3	Original	2-41	Original
0-9	5th	2-4	Original	2-42	Original
0-9.1	1st	2-5	Original	2-43	Original
0-10	1st	2-6	Original	2-44	Original
0-11	2nd	2-7	Original	2-45	Original
0-12	3rd	2-8	1st	2-46	1st
0-13	1st	2-9	1st	2-47	Original
0-14	1st	2-9.1	Original	2-48	1st
0-15	Original	2-9.2	Original	2-49	1st
0-16	2nd	2-10	1st	2-50	1st
0-17	1st	2-11	1st	2-51	Original
0-18	Original	2-12	Original	2-52	1st
0-19	3rd	2-13	Original	2-53	2nd
0-20	Original	2-14	Original	2-54	1st
0-21	Original	2-15	Original	2-55	1st
0-22	4th	2-16	Original	2-56	2nd
0-23	5th	2-17	Original	2-57	2nd
0-23.1	Original	2-18	Original	2-58	Original
0-24	3rd	2-19	3rd	2-59	3rd
0-24.1	1st	2-19.1	Original	2-60	4th
0-24.2	1st	2-19.2	Original	2-60.1	1st
0-24.3	4th	2-20	2nd	2-61	1st
0-24.4	1st	2-20.1	Original	2-62	Original
0-24.5	1st	2-21	4th	2-63	1st
0-24.6	1st	2-22	2nd	2-64	1st
0-24.7	Original	2-22.1	Original	2-64.1	1st
0-24.8	Original	2-23	2nd	2-65	3rd
0-24.9	1st	2-24	2nd	2-66	1st
0-24.10	2nd	2-25	3rd	2-67	2nd
0-24.11	2nd	2-25.1	Original	2-67.1	Original
0-24.12	1st	2-25.2	Original	2-68	2nd
0-24.13	1st	2-25.3	Original	2-68.1	1st
		2-26	2nd	2-69	1st
				2-70	Original

*Issued July 2, 2004

Emmanuel Staurulakis
President
6315 Seabrook Road, Seabrook, Maryland 20706

ACCESS SERVICE

CHECK SHEET

Page	Number of Revision Except as Indicated
2-71	3rd
2-71.1	Original
2-72	4th
2-73	3rd
2-73.1	Original
2-74	2nd
2-75	3rd
2-76	3rd
2-77	6th*
2-77.1	Original
2-78	4th
2-79	Original
3-1	2nd
3-2	2nd
3-3	1st
3-4	1st
3-5	2nd
3-6	1st
3-7	2nd
3-8	2nd
3-9	1st
3-10	1st
3-11	1st
3-12	2nd
3-13	1st
3-14	2nd
3-15	1st
3-16	1st
3-17	1st
3-18	1st
3-19	1st
3-20	1st
3-21	2nd
3-22	2nd
3-23	2nd

* Issued: April 19, 2004

ACCESS SERVICE
CHECK SHEET

Page	Number of Revision Except as Indicated	Page	Number of Revision Except as Indicated	Page	Number of Revision Except as Indicated
3-24	2nd	6-10.2	4th	6-54	Original
3-25	4th* (x)	6-10.3	4th	6-55	Original
4-1	1st	6-10.4	3rd	6-56	Original
4-2	Original	6-10.5	3rd	6-57	Original
4-3	1st	6-10.6	Original	6-58	2nd
4-4	1st	6-11	2nd	6-59	Original
4-5	Original	6-12	2nd	6-60	Original
4-6	1st	6-13	2nd	6-61	Original
4-7	2nd	6-14	2nd	6-62	Original
4-8	1st	6-15	Original	6-63	Original
5-1	1st	6-16	Original	6-64	Original
5-2	1st	6-17	1st	6-65	Original
5-3	1st	6-18	Original	6-66	Original
5-4	1st	6-19	Original	6-67	Original
5-5	1st	6-20	1st	6-68	2nd
5-5.1	2nd	6-21	3rd	6-69	1st
5-6	1st	6-21.1	Original	6-70	Original
5-7	2nd	6-22	Original	6-71	Original
5-8	2nd	6-23	Original	6-72	Original
5-9	Original	6-24	Original	6-73	Original
5-10	Original	6-25	Original	6-74	Original
5-11	Original	6-26	1st	6-75	Original
5-12	Original	6-27	Original	6-76	1st
5-13	Original	6-28	Original	6-77	Original
5-14	Original	6-29	Original	6-78	Original
5-14.1	Original	6-30	2nd	6-79	Original
5-15	Original	6-31	1st	6-80	Original
5-16	1st	6-31.1	Original	6-81	2nd
5-17	Original	6-32	Original	6-82	Original
5-18	3rd	6-33	1st	6-83	Original
5-18.1	1st	6-34	2nd	6-84	1st
5-19	5th	6-35	3rd	6-85	Original
5-20	1st	6-35.1	Original	6-86	1st
5-21	Original	6-36	3rd	6-87	Original
5-22	1st	6-36.1	2nd	6-88	1st
5-23	2nd	6-37	Original	6-89	1st
5-24	Original	6-38	Original	6-90	1st
5-25	1st	6-39	Original	6-91	Original
5-26	1st	6-40	Original	6-92	1st
6-1	1st	6-41	1st	6-93	Original
6-2	1st	6-42	Original	6-94	Original
6-3	Original	6-43	1st	6-95	2nd
6-4	1st	6-44	1st	6-96	2nd
6-5	Original	6-45	1st	6-97	2nd
6-6	1st	6-46	1st	6-98	Original
6-7	2nd	6-47	Original	6-99	Original
6-7.1	3rd	6-48	2nd	6-100	2nd
6-8	1st	6-49	3rd	6-101	2nd
6-9	4th	6-50	2nd	6-102	1st
6-10	2nd	6-51	2nd	6-103	Original
6-10.1	1st	6-52	1st	6-104	1st
		6-53	Original	6-105	Original

*Issued March 27, 2003
(x) Filed under authority of Special Permission No. 03-030 of the Federal Communications Commission.

Emmanuel Staurulakis
President
6315 Seabrook Road, Seabrook, Maryland 20706

ACCESS SERVICE

CHECK SHEET

Page	Number of Revision Except as Indicated	Page	Number of Revision Except as Indicated	Page	Number of Revision Except as Indicated
6-106	Original	7-23	Original	7-61.6	Original
6-107	Original	7-24	Original	7-61.7	Original
6-108	Original	7-25	1st	7-62	1st
6-109	3rd	7-26	1st	7-63	Original
6-110	1st	7-27	2nd	8-1	1st
6-111	Original	7-28	1st	9-1	Original
6-112	1st	7-29	1st	10-1	Original
6-113	1st	7-30	1st	10-2	1st
6-114	Original	7-31	Original	10-3	1st
6-115	2nd	7-32	1st	10-4	Original
6-116	Original	7-33	Original	10-5	Original
6-117	1st	7-34	1st	10-6	1st
6-118	1st	7-34.1	1st	10-7	1st
6-119	2nd	7-34.2	1st	10-8	Original
6-120	1st	7-34.3	1st	11-1	Original
6-121	1st	7-34.4	1st	11-2	Original
6-122	1st	7-34.5	Original	12-1	1st
6-123	3rd	7-34.6	Original	13-1	1st
6-123.1	Original	7-34.7	Original	13-2	1st
6-123.2	Original	7-34.8	Original	13-3	1st
6-124	Original	7-34.9	Original	13-4	Original
6-125	1st	7-35	1st	13-5	1st
6-126	2nd	7-36	1st	13-6	Original
6-127	1st	7-37	1st	13-7	Original
6-128	1st	7-38	1st	13-8	Original
6-129	1st	7-39	1st	13-9	1st
6-130	1st	7-40	1st	13-10	Original
6-131	1st	7-41	1st	13-11	1st
6-132	Original	7-42	Original	13-12	Original
6-133	Original	7-43	Original	13-13	1st
6-134	Original	7-44	Original	13-14	Original
6-135	1st	7-45	Original	13-15	1st
7-1	1st	7-46	Original	13-16	3rd
7-2	Original	7-47	Original	13-17	1st
7-3	1st	7-48	Original	13-18	2nd
7-4	Original	7-49	Original	13-19	2nd
7-5	Original	7-50	Original	13-20	2nd
7-6	1st	7-51	Original	13-20.1	Original
7-7	Original	7-52	Original	13-21	2nd*
7-8	Original	7-53	1st	13-21.1	1st*
7-9	Original	7-54	Original	13-22	2nd*
7-10	1st	7-55	Original	13-23	Original
7-11	Original	7-56	Original	13-24	1st
7-12	Original	7-57	1st	13-25	Original
7-13	1st	7-58	1st	14-1	Original
7-13.1	1st	7-58.1	2nd	15-1	1st
7-14	1st	7-59	2nd	15-2	Original
7-15	Original	7-59.1	Original	15-3	1st
7-16	Original	7-60	1st	15-4	Original
7-17	Original	7-61	1st	15-5	1st
7-18	Original	7-61.1	2nd	15-6	Original
7-19	Original	7-61.2	Original	15-7	1st
7-20	Original	7-61.3	Original	15-8	1st
7-21	1st	7-61.4	Original	15-9	Original
7-22	3rd	7-61.5	Original	15-10	Original

*Issued: March 31, 2004

Emmanuel Staurulakis
President
6315 Seabrook Road, Seabrook, Maryland 20706

ACCESS SERVICE

CHECK SHEET

Page	Number of Revision Except as Indicated
15-11	Original
15-12	Original
15-13	Original
15-14	Original
15-15	Original
15-16	Original
15-17	Original
15-18	Original
15-19	Original
15-20	Original
15-21	Original
15-22	1st
15-23	Original
15-24	1st
15-25	1st
15-26	1st
15-27	1st
15-28	Original
15-29	Original
15-30	Original
15-31	Original
15-32	Original
15-33	Original
15-34	1st
15-35	Original
15-35.1	Original
15-36	Original
15-37	1st
15-38	1st
15-39	Original
15-40	1st
15-41	Original
15-42	Original
15-43	Original
15-44	Original
15-45	1st
15-46	Original
15-47	Original
15-48	Original
15-49	Original
15-50	Original
15-51	Original
15-52	Original
15-53	Original
15-54	Original
15-55	1st
16-1	2nd
16-2	2nd
16-3	Original

Page	Number of Revision Except as Indicated
16-4	1st
16-4.1	Original
16-5	1st
16-5.1	Original
16-6	2nd
16-7	2nd
16-8	1st
16-8.1	Original
16-8.2	Original
16-9	Original
16-10	Original
16-11	Original
16-11.1	Original
16-11.2	Original
16-11.3	Original
16-11.4	Original
16-12	2nd
16-12.1	Original
16-13	1st
16-14	1st
16-15	2nd
16-16	1st
16-17	1st
16-18	Original
16-19	1st
16-20	1st
16-20.1	Original
16-20.2	Original
16-20.3	1st
16-20.4	Original
16-20.5	Original
16-21	2nd
16-22	Original
16-23	Original
16-24	1st
16-25	Original
16-26	1st
16-27	Original
16-28	Original
16-29	Original
16-30	Original
16-31	Original
16-32	Original
16-33	Original
16-34	Original
16-35	Original
16-36	Original
16-37	Original
16-38	Original
16-39	Original

Page	Number of Revision Except as Indicated
16-40	Original
16-41	Original
16-42	Original
16-43	Original
16-44	Original
16-45	Original
16-46	Original
16-47	Original
16-48	Original
16-49	Original
16-50	Original
16-51	Original
16-52	Original
16-53	Original
16-54	Original
16-55	Original
16-56	Original
16-57	Original
16-58	Original
16-59	Original
16-60	Original
16-61	Original
16-62	1st
16-63	Original
16-64	Original
16-65	Original
16-66	Original
16-67	Original
16-68	Original
16-69	Original
16-70	Original
16-71	Original
16-72	Original
16-72.1	Original
16-73	Original
16-74	Original
16-75	Original
16-76	Original
16-77	Original
16-78	Original
16-79	3rd*
16-79.1	Original
16-80	1st
16-81	1st
16-81.1	Original
16-82	1st
16-83	2nd
16-84	1st
16-85	1st
16-86	1st
16-87	1st

*Issued May 26, 2004

Emmanuel Staurulakis
President
6315 Seabrook Road, Seabrook, Maryland 20706

ACCESS SERVICE

CHECK SHEET

Page	Number of Revision Except as Indicated
16-88	Original
16-89	Original
16-90	Original
16-91	Original
16-92	Original
16-93	Original
16-94	Original
16-95	Original
16-96	Original
16-97	Original
16-98	Original
16-99	Original
16-100	Original
16-101	Original
16-102	Original
17-1	Original
17-2	10th*
17-3	7th*
17-4	10th*
17-5	6th
17-5.1	8th*
17-5.2	2nd
17-6	Original
17-7	3rd*
17-8	9th*
17-9	Original
17-10	Original
17-11	Original
17-12	Original
17-13	8th*
17-14	Original
17-15	5th
17-16	3rd
17-17	Original
17-18	Original
17-19	Original
17-20	8th*
17-21	Original
17-22	8th*
17-23	2nd
17-24	Original
17-25	Original
17-26	Original
17-27	2nd
17-28	2nd
17-29	2nd
17-30	2nd
17-31	Original
17-32	Original
17-33	Original
17-34	3rd
17-34.1	4th
17-35	Original
17-36	Original
17-37	Original
17-38	3rd
17-39	9th*
17-40	2nd
17-41	6th*
17-42	11th*
17-43	Original
17-44	Original
17-45	9th*
17-46	9th*
17-47	Original
17-48	Original
17-49	Original
17-50	Original
17-51	8th*
17-52	5th
17-53	5th
17-54	6th*
17-55	5th
17-56	Original
17-57	Original
17-58	8th*
17-59	Original

*Issued June 16, 2004

Emmanuel Staurulakis
President
6315 Seabrook Road, Seabrook, Maryland 20706

ACCESS SERVICE

CHECK SHEET

Page	Number of Revision Except as Indicated	Page	Number of Revision Except as Indicated	Page	Number of Revision Except as Indicated
17-60	7th	17-107	Original	17-145	2nd
17-61	7th	17-108	1st	17-146	2nd
17-62	1st	17-109	6th	17-146.1	5th
17-62.1	Original	17-110	Original	17-146.2	1st
17-63	Original	17-111	Original	17-146.3	2nd
17-64	Original	17-112	Original	17-146.4	1st
17-65	1st	17-112.1	2nd	17-146.5	Original
17-66	1st	17-112.2	Original	17-147	3rd
17-67	1st	17-112.3	Original	17-148	3rd
17-68	1st	17-112.4	Original	17-149	11th
17-69	Original	17-112.5	Original	17-150	12th
17-70	Original	17-112.6	Original	17-151	8th
17-71	Original	17-112.7	Original	17-152	Original
17-72	1st	17-112.8	Original	17-153	Original
17-73	7th	17-112.9	Original	17-154	Original
17-74	Original	17-113	5th	17-155	Original
17-75	Original	17-114	4th	17-156	2nd
17-76	Original	17-115	13th	17-157	8th
17-76.1	3rd	17-115.1	2nd	17-158	1st
17-76.2	Original	17-116	10th	17-159	6th
17-76.3	Original	17-117	2nd	17-160	5th
17-77	3rd	17-118	2nd	17-161	2nd
17-78	4th	17-119	2nd	17-162	Original
17-79	11th	17-120	4th	17-163	Original
17-80	11th	17-121	4th	17-164	7th
17-81	8th	17-122	10th	17-165	1st
17-82	5th	17-123	6th	17-166	7th
17-83	Original	17-124	8th	17-167	5th
17-84	Original	17-125	7th	17-168	2nd
17-85	Original	17-126	3rd	17-169	Original
17-86	Original	17-127	3rd	17-170	Original
17-87	Original	17-128	3rd	17-171	Original
17-88	7th	17-129	9th	17-172	Original
17-89	Original	17-130	3rd	17-173	Original
17-90	Original	17-131	9th	17-174	Original
17-91	Original	17-132	4th	17-175	Original
17-92	Original	17-133	5th	17-176	Original
17-93	Original	17-134	2nd	17-177	1st
17-94	Original	17-135	2nd	17-178	4th
17-95	7th	17-136	2nd	17-179	Original
17-96	Original	17-137	2nd	17-180	Original
17-97	6th	17-138	2nd	17-181	Original
17-98	5th	17-139	2nd	17-181.1	1st
17-99	1st	17-140	2nd	17-182	3rd
17-100	Original	17-141	2nd	17-183	5th
17-101	Original	17-142	3rd	17-184	13th* (x)
17-102	Original	17-143	6th	17-185	11th
17-103	Original	17-144	2nd	17-186	9th
17-104	Original			17-187	Original
17-105	Original			17-188	Original
17-106	Original			17-189	Original

*Issued June 30, 2004

(x) Filed under authority of Special Permission No. 04-053 of the Federal Communications Commission.

Emmanuel Staurulakis
President
6315 Seabrook Road, Seabrook, Maryland 20706

ACCESS SERVICE

CHECK SHEET

Page	Number of Revision Except as Indicated	
17-190	Original	
17-191	Original	
17-192	11th*	(x)
17-193	3rd	
17-194	8th*	(x)
17-195	9th*	(x)
17-196	Original	
17-197	Original	
17-198	Original	
17-199	11th*	(x)
17-200	8th*	(x)
17-201	10th*	(x)
17-202	10th*	(x)
17-203	1st	
17-204	Original	
17-205	Original	
17-206	Original	
17-207	Original	
17-208	Original	
17-209	Original	
17-210	Original	
17-211	Original	
17-212	1st	
17-213	6th	
17-214	Original	
17-215	Original	
17-216	Original	
17-216.1	1st	
17-216.2	1st	
17-216.3	1st	
17-216.4	Original	
17-216.5	Original	
17-216.6	Original	
17-217	3rd	
17-218	2nd	
17-219	11th	
17-220	12th	
17-221	8th	
17-222	Original	
17-223	Original	
17-224	Original	
17-225	Original	
17-226	Original	

Page	Number of Revision Except as Indicated
17-227	8th
17-228	5th
17-229	6th
17-230	3rd
17-231	Original
17-232	Original
17-233	Original
17-234	8th
17-235	Original
17-236	7th
17-237	7th
17-238	2nd
17-239	Original
17-240	Original
17-241	Original
17-242	Original
17-243	Original
17-244	Original
17-245	Original
17-246	Original
17-247	1st
17-248	7th
17-249	Original
17-250	Original
17-251	Original
17-251.1	1st
17-251.2	1st
17-251.3	Original
17-251.4	Original
17-251.5	Original
17-251.6	Original
17-251.7	Original
17-251.8	Original
17-251.9	Original
17-251.10	Original
17-252	3rd
17-253	4th
17-254	8th
17-255	8th
17-256	8th
17-257	Original
17-258	Original
17-259	Original
17-260	Original

Page	Number of Revision Except as Indicated
17-261	Original
17-262	7th
17-263	1st
17-264	3rd
17-265	4th
17-266	2nd
17-267	Original
17-268	Original
17-269	8th
17-270	Original
17-271	6th
17-272	5th
17-273	Original
17-274	Original
17-275	Original
17-276	Original
17-277	Original
17-278	Original
17-279	Original
17-280	Original
17-281	Original
17-282	1st
17-283	3rd
17-284	Original
17-285	Original
17-286	Original
17-286.1	3rd
17-287	3rd
17-288	1st
17-289	9th
17-290	10th
17-291	9th
17-292	Original
17-293	Original
17-294	Original
17-295	Original
17-296	Original
17-297	7th
17-298	Original
17-299	Original
17-300	Original

*Issued June 30, 2004

(x) Filed under authority of Special Permission No. 04-053 of the Federal Communications Commission.

Emmanuel Staurulakis
President
6315 Seabrook Road, Seabrook, Maryland 20706

ACCESS SERVICE

CHECK SHEET

Page	Number of Revision Except as Indicated	Page	Number of Revision Except as Indicated	Page	Number of Revision Except as Indicated
17-301	Original	17-343	2nd	17-388	1st
17-302	Original	17-344	Original	17-389	1st
17-303	Original	17-345	Original	17-390	2nd
17-304	9th	17-346	Original	17-391	1st
17-305	Original	17-347	Original	17-392	1st
17-306	10th	17-348	Original	17-393	1st
17-307	Original	17-349	Original	17-394	3rd
17-308	2nd	17-350	Original	17-395	4th*
17-308.1	Original	17-351	Original	17-396	9th*
17-309	Original	17-352	1st	17-397	6th*
17-310	1st	17-353	6th	17-398	Original
17-311	Original	17-354	Original	17-399	Original
17-312	Original	17-355	Original	17-400	Original
17-313	Original	17-356	Original	17-401	Original
17-314	Original	17-356.1	2nd*	17-402	Original
17-315	Original	17-357	1st	17-403	6th*
17-316	Original	17-358	4th	17-404	Original
17-317	1st	17-359	2nd	17-405	3rd*
17-318	2nd	17-360	2nd	17-406	3rd*
17-319	Original	17-361	5th	17-407	Original
17-320	Original	17-362	6th	17-408	Original
17-321	Original	17-363	5th	17-409	Original
17-321.1	Original	17-364	1st	17-410	5th*
17-321.2	Original	17-365	1st	17-411	Original
17-321.3	Original	17-366	1st	17-412	6th*
17-322	2nd	17-367	1st	17-413	5th*
17-323	2nd	17-368	1st	17-414	2nd
17-324	2nd	17-369	5th	17-415	Original
17-325	9th	17-370	1st	17-415.1	3rd*
17-326	8th	17-371	4th	17-416	Original
17-327	Original	17-372	1st	17-417	Original
17-328	Original	17-373	1st	17-418	Original
17-329	Original	17-374	1st	17-419	Original
17-330	Original	17-375	1st	17-420	Original
17-331	Original	17-376	1st	17-421	Original
17-332	7th	17-377	1st	17-422	Original
17-333	Original	17-378	5th	17-423	1st
17-334	Original	17-379	1st	17-424	4th
17-335	Original	17-380	1st	17-425	Original
17-336	Original	17-381	1st	17-426	Original
17-337	Original	17-382	1st	17-427	Original
17-338	Original	17-383	1st	17-427.1	2nd*
17-339	7th	17-384	1st	17-427.2	2nd*
17-340	Original	17-385	1st	17-427.2.1	1st
17-341	6th	17-386	1st	17-427.2.2	1st*
17-342	Original	17-387	1st	17-427.3	Original
				17-428	3rd

* Issued June 24, 2004

Emmanuel Staurulakis
President
6315 Seabrook Road, Seabrook, Maryland 20706

ACCESS SERVICE
CHECK SHEET

Page	Number of Revision Except as Indicated
17-429	2nd
17-430	8th*
17-431	6th*
17-432	Original
17-433	Original
17-434	Original
17-435	Original
17-436	Original
17-437	6th*
17-438	Original
17-439	4th*
17-440	4th*
17-441	Original
17-442	Original
17-443	Original
17-444	5th*
17-445	Original
17-446	6th*
17-447	1st
17-448	2nd
17-449	Original
17-449.1	Original
17-450	Original
17-451	Original
17-452	Original
17-453	Original
17-454	Original
17-455	Original
17-456	Original
17-457	1st
17-458	4th
17-459	Original
17-460	Original
17-461	Original
17-461.1	4th*
17-461.2	1st
17-461.2.1	1st
17-461.2.2	1st*
17-461.3	Original
17-462	3rd
17-463	3rd
17-464	8th*
17-465	6th*
17-466	Original
17-467	Original
17-468	Original
17-469	Original
17-470	Original
17-471	6th*
17-472	Original
17-473	4th*
17-474	3rd

*Issued June 24, 2004

Page	Number of Revision Except as Indicated
17-475	Original
17-476	Original
17-477	Original
17-478	6th*
17-479	Original
17-480	6th*
17-481	2nd*
17-482	2nd
17-483	Original
17-483.1	Original
17-484	Original
17-485	Original
17-486	Original
17-487	Original
17-488	Original
17-489	Original
17-490	Original
17-491	1st
17-492	4th
17-493	Original
17-494	Original
17-495	Original
17-495.1	1st
17-495.2	1st
17-495.2.1	1st
17-495.2.2	1st*
17-495.3	Original
17-496	3rd
17-497	4th
17-498	7th*
17-499	7th*
17-500	Original
17-501	Original
17-502	Original
17-503	Original
17-504	Original
17-505	6th*
17-506	Original
17-507	2nd
17-508	Original
17-509	Original
17-510	Original
17-511	Original
17-512	7th*
17-513	Original
17-514	6th*
17-515	Original
17-516	2nd*
17-517	Original
17-518	Original
17-519	Original
17-520	Original

Page	Number of Revision Except as Indicated
17-521	Original
17-522	Original
17-523	Original
17-524	Original
17-525	1st
17-526	4th
17-527	Original
17-528	Original
17-529	Original
17-529.1	Original
17-529.2	Original
17-529.3	1st*
17-529.4	1st*
17-529.5	1st*
17-530	3rd
17-531	1st
17-532	6th
17-533	6th
17-534	Original
17-535	Original
17-536	Original
17-537	Original
17-538	Original
17-539	6th
17-540	Original
17-541	Original
17-542	Original
17-543	Original
17-544	Original
17-545	Original
17-546	1st
17-547	Original
17-548	3rd
17-549	Original
17-550	Original
17-550.1	Original
17-551	Original
17-552	Original
17-553	Original
17-554	Original
17-555	Original
17-556	Original
17-557	Original
17-558	Original
17-559	1st
17-560	Original
17-561	Original
17-562	Original
17-563	Original
17-563.1	1st
17-564	3rd
17-565	4th
17-566	6th
17-566.1	3rd

6315 Seabrook Road, Seabrook, Maryland 20706

ACCESS SERVICE

CHECK SHEET

Page	Number of Revision Except as Indicated
17-567	5th
17-568	1st
17-569	1st
17-570	1st
17-571	1st
17-572	1st
17-573	5th
17-574	3rd
17-575	4th
17-576	4th
17-577	1st
17-578	1st
17-579	1st
17-580	5th
17-581	3rd
17-582	5th
17-583	3rd
17-584	3rd
17-585	1st
17-586	1st
17-587	2nd
17-588	2nd
17-589	2nd
17-590	1st
17-591	1st
17-592	1st
17-593	2nd
17-594	2nd
17-595	1st
17-596	1st
17-597	1st
17-597.1	5th
17-597.1.1	2nd
17-597.2	1st
17-597.3	1st
17-598	2nd
17-599	2nd
17-600	4th
17-601	3rd
17-602	1st
17-603	1st
17-604	1st
17-605	1st
17-606	1st
17-607	3rd
17-608	1st
17-609	1st
17-610	1st
17-611	1st
17-612	1st
17-613	2nd
17-614	1st
17-615	2nd
17-616	1st
17-617	2nd
17-618	1st
17-619	1st
17-620	1st
17-621	1st
17-622	1st
17-623	1st
17-624	1st
17-625	1st
17-626	2nd
17-627	2nd
17-628	1st
17-629	1st
17-630	1st
17-630.1	1st
17-630.2	1st
17-630.3	1st
17-631	5th
17-631.1	8th
17-632	Original
17-633	5th
17-634	4th
17-635	Original
17-636	Original
17-637	Original
17-638	Original
17-639	Original
17-640	4th
17-641	Original
17-642	3rd
17-643	2nd
17-644	Original
17-645	Original
17-646	4th
17-647	Original
17-648	4th
17-649	Original
17-650	Original
17-651	Original
17-652	Original
17-653	Original
17-654	Original
17-655	Original
17-656	Original
17-657	Original
17-658	Original
17-659	1st
17-660	1st
17-661	Original
17-662	Original
17-663	Original
17-664	4th
17-665	6th
17-666	7th
17-667	7th
17-668	4th
17-669	4th
17-670	4th
17-671	4th
17-672	4th
17-673	6th
17-674	6th
17-675	4th
17-676	4th
17-677	4th
17-678	6th
17-679	4th
17-680	6th
17-681	7th
17-682	4th
17-683	4th
17-684	4th
17-685	4th
17-686	4th
17-687	4th
17-688	4th
17-689	5th*
17-690	5th
17-691	6th
17-692	6th
17-692.1	1st
17-692.2	1st
17-692.3	Original
17-692.4	Original
17-692.5	Original
17-692.6	Original

*Issued July 2, 2004

Emmanuel Staurulakis
President
6315 Seabrook Road, Seabrook, Maryland 20706

ACCESS SERVICE

CHECK SHEET

Page	Number of Revision Except as Indicated	Page	Number of Revision Except as Indicated	Page	Number of Revision Except as Indicated
17-693	4th				
17-694	4th				
17-695	4th				
17-696	2nd				
17-697	2nd				
17-698	Original				
17-699	Original				
17-700	Original				
17-701	Original				
17-702	Original				
17-703	Original				
17-704	Original				
17-705	1st*				
17-706	1st*				
17-707	1st*				
17-708	Original				
17-709	Original				

*Issued March 31, 2004

Emmanuel Staurulakis
President
6315 Seabrook Road, Seabrook, Maryland 20706

ACCESS SERVICE

Under authority of the Federal Communications Commission's Order In the Matter of December 17, 2001 MAG Access Charge Tariff Filings, DA 01-3023 released December 31, 2001, the effective date of the tariff revisions contained in the following tariff pages originally filed under Transmittal No. 63 and Transmittal No. 64 are advanced for one day to December 31, 2001 and then suspended for a period of one day, and become effective on January 1, 2002.

Page Number – Transmittal No. 63	Page Number – Transmittal No. 64
57th Revised Page 0-1	58th Revised Page 0-1
17th Revised Page 0-2	30th Revised Page 0-4.3
39th Revised Page 0-4	1st Revised Page 17-322
22nd Revised Page 0-4.1	
23rd Revised Page 0-4.2	
29th Revised Page 0-4.3	
20th Revised Page 0-4.4	
14th Revised Page 0-4.5	
2nd Revised Page 4-7	
4th Revised Page 6-9	
3rd Revised Page 6-10.5	
7th Revised Page 17-2	
5th Revised Page 17-3	
3rd Revised Page 17-4	
6th Revised Page 17-5.1	
7th Revised Page 17-8	
6th Revised Page 17-13	
5th Revised Page 17-15	
6th Revised Page 17-20	
1st Revised Page 17-38	
6th Revised Page 17-39	
9th Revised Page 17-42	
7th Revised Page 17-46	
6th Revised Page 17-51	
6th Revised Page 17-58	
9th Revised Page 17-79	
10th Revised Page 17-80	
6th Revised Page 17-81	
6th Revised Page 17-88	
9th Revised Page 17-115	
6th Revised Page 17-116	
6th Revised Page 17-122	
9th Revised Page 17-149	
10th Revised Page 17-150	
6th Revised Page 17-151	
6th Revised Page 17-157	
8th Revised Page 17-184	
9th Revised Page 17-185	
6th Revised Page 17-186	
6th Revised Page 17-192	

Continued…

ACCESS SERVICE

Page Number – Transmittal No. 63 (Cont'd)

4th Revised Page 17-195
6th Revised Page 17-199
9th Revised Page 17-219
10th Revised Page 17-220
6th Revised Page 17-221
6th Revised Page 17-227
6th Revised Page 17-234
6th Revised Page 17-254
7th Revised Page 17-255
6th Revised Page 17-256
6th Revised Page 17-262
6th Revised Page 17-269
7th Revised Page 17-289
8th Revised Page 17-290
7th Revised Page 17-291
8th Revised Page 17-325
6th Revised Page 17-326
6th Revised Page 17-332
7th Revised Page 17-396
4th Revised Page 17-397
4th Revised Page 17-403
6th Revised Page 17-430
4th Revised Page 17-431
4th Revised Page 17-437
6th Revised Page 17-464
4th Revised Page 17-465
4th Revised Page 17-471
4th Revised Page 17-478
4th Revised Page 17-498
4th Revised Page 17-499
4th Revised Page 17-512
4th Revised Page 17-532
4th Revised Page 17-533
4th Revised Page 17-539
2nd Revised Page 17-548
2nd Revised Page 17-565
4th Revised Page 17-566
3rd Revised Page 17-567
3rd Revised Page 17-573
1st Revised Page 17-574
2nd Revised Page 17-575
2nd Revised Page 17-576
3rd Revised Page 17-580
1st Revised Page 17-581
3rd Revised Page 17-582

Continued…

ACCESS SERVICE

Page Number – Transmittal No. 63 (Cont'd)

1st Revised Page 17-583
1st Revised Page 17-584
3rd Revised Page 17-600
2nd Revised Page 17-601
2nd Revised Page 17-607
3rd Revised Page 17-631
1st Revised Page 17-631.1
3rd Revised Page 17-633
2nd Revised Page 17-634
2nd Revised Page 17-640
2nd Revised Page 17-642
2nd Revised Page 17-643
2nd Revised Page 17-646
2nd Revised Page 17-648
4th Revised Page 17-665
5th Revised Page 17-666
5th Revised Page 17-667
4th Revised Page 17-673
4th Revised Page 17-674
4th Revised Page 17-678
4th Revised Page 17-680
5th Revised Page 17-681

ACCESS SERVICE

Under authority of the Federal Communications Commission's Order In the Matter of July 1, 2004 Annual Access Charge Tariff Filings, DA 04-1997 released July 1, 2004, the effective date of the tariff revisions contained in the following tariff pages originally filed under Transmittal No. 96 and Transmittal No. 97 are advanced for one day to June 30, 2004 and then suspended for a period of one day, and become effective on July 1, 2004.

Transmittal No. 96
Coastal Utilities, Inc.
Concord Telephone Company
Horry Telephone Cooperative, Inc.

Page Number
89th Revised Page 0-1
36th Revised Page 0-4.1
34th Revised Page 0-4.2
42nd Revised Page 0-4.3
9th Revised Page 17-39
6th Revised Page 17-41
11th Revised Page 17-42
9th Revised Page 17-45
9th Revised Page 17-46
8th Revised Page 17-51
6th Revised Page 17-54
8th Revised Page 17-58
7th Revised Page 17-60
7th Revised Page 17-61
13th Revised Page 17-115
10th Revised Page 17-116
4th Revised Page 17-120
4th Revised Page 17-121
10th Revised Page 17-122
6th Revised Page 17-123
8th Revised Page 17-124
9th Revised Page 17-129
9th Revised Page 17-131
5th Revised Page 17-133
1st Revised Page 17-146.2
2nd Revised Page 17-146.3
11th Revised Page 17-219
12th Revised Page 17-220
8th Revised Page 17-221
8th Revised Page 17-227
5th Revised Page 17-228
6th Revised Page 17-229
8th Revised Page 17-234
7th Revised Page 17-236
7th Revised Page 17-237
1st Revised Page 17-251.2

Transmittal No. 97
Fort Mill Telephone Company
Lancaster Telephone Company
Rock Hill Telephone Company

Page Number
90th Revised Page 0-1
28th Revised Page 0-4.4
25th Revised Page 0-4.5
4th Revised Page 17-395
9th Revised Page 17-396
6th Revised Page 17-397
6th Revised Page 17-403
3rd Revised Page 17-405
3rd Revised Page 17-406
5th Revised Page 17-410
6th Revised Page 17-412
5th Revised Page 17-413
3rd Revised Page 17-415.1
2nd Revised Page 17-427.1
2nd Revised Page 17-427.2
1st Revised Page 17-427.2.2
8th Revised Page 17-430
6th Revised Page 17-431
6th Revised Page 17-437
4th Revised Page 17-439
4th Revised Page 17-440
5th Revised Page 17-444
6th Revised Page 17-446
4th Revised Page 17-461.1
1st Revised Page 17-461.2.2
8th Revised Page 17-464
6th Revised Page 17-465
6th Revised Page 17-471
4th Revised Page 17-473
6th Revised Page 17-478
6th Revised Page 17-480
2nd Revised Page 17-481
1st Revised Page 17-495.2.2

ACCESS SERVICE

TABLE OF CONTENTS

Page No.

Title Page ..... Title

Check Sheet 1

Table Of Contents 5

Concurring Carriers 25

Connecting Carriers 25

Other Participating Carriers 25

Registered Service Marks 25

Registered Trademarks 25

Explanation Of Symbols 26

Explanation Of Abbreviations 26

Reference To Other Tariffs 28

Reference To Technical Publications 28

1. APPLICATION OF TARIFF 1-1

2. GENERAL REGULATIONS 2-1

2.1 Undertaking of the Telephone Company 2-1

2.1.1 Scope 2-1
2.1.2 Limitations 2-1
2.1.3 Liability 2-3
2.1.4 Provision of Services 2-7
2.1.5 Facility Terminations 2-7
2.1.6 Service Maintenance 2-7
2.1.7 Changes and Substitutions 2-8
2.1.8 Refusal and Discontinuance of Service 2-9
2.1.9 Notification of Service-Affecting Activities 2-12
2.1.10 Coordination with Respect to Network Contingencies 2-12
2.1.11 Provision and Ownership of Telephone Numbers 2-12

ACCESS SERVICE

TABLE OF CONTENTS (Cont'd)

Page No.

2. GENERAL REGULATIONS (Cont'd)

2.2 Use 2-13

2.2.1 Interference or Impairment 2-13
2.2.2 Unlawful and Abusive Use 2-13

2.3 Obligations of the Customer 2-14

2.3.1 Damages 2-14
2.3.2 Ownership of Facilities and Theft 2-14
2.3.3 Equipment Space and Power 2-15
2.3.4 Availability for Testing 2-15
2.3.5 Limitation of Use of Metallic Facilities 2-15
2.3.6 Balance 2-16
2.3.7 Design of Customer Services 2-16
2.3.8 References to the Telephone Company 2-16
2.3.9 Claims and Demands for Damages 2-17
2.3.10 Coordination with Respect to Network Contingencies 2-18
2.3.11 Jurisdictional Report and Certification Requirements ..... 2-18 (T)
2.3.12 Determination of Interstate Charges for Mixed Interstate and Intrastate Access Service 2-26

2.4 Payment Arrangements and Credit Allowances 2-27

2.4.1 Payment of Rates, Charges and Deposits 2-27
2.4.2 Minimum Periods 2-34
2.4.3 Cancellation of an Order for Service 2-35
2.4.4 Credit Allowance for Service Interruptions 2-35
2.4.5 Re-establishment of Service Following Fire, Flood or Other Occurrence 2-42
2.4.6 Title or Ownership Rights 2-43
2.4.7 Access Services Provided By More Than One Telephone Company 2-43

2.5 Connections 2-58

ACCESS SERVICE

TABLE OF CONTENTS (Cont'd)

Page No.

2. GENERAL REGULATIONS (Cont'd)

2.6 Definitions 2-59

800 Series Service 2-59
800 Series DataBase Access Service 2-59
Access Code 2-59
Access Minutes 2-59
Access Tandem 2-59
Add/Drop Multiplexing 2-60
Advanced Intelligent Network (AIN) 2-60
Aggregator 2-59
Answer/Disconnect Supervision 2-60
Asymmetrical Digital Subscriber Line (ADSL) 2-60
Asynchronous Transfer Mode (ATM) 2-60
Attenuation Distortion 2-60.1
Balance (100 Type) Test Line 2-60.1
Bit 2-60.1
Billing Name and Address ..... 2-60.1 (N)
Business Day 2-60.1
Busy Hour Minutes of Capacity (BHMC) 2-61
Call 2-61
Carrier Identification Code (CIC) 2-61
Carrier or Common Carrier 2-61
CCS 2-61
Cell 2-61
Central Office 2-61
Central Office Maintenance Technician 2-62
Central Office Prefix 2-62
Channel(s) 2-62
Channel Service Unit 2-62
Channelize 2-62
C-Message Noise 2-62
C-Notched Noise 2-63
Coin Station 2-63
Committed Information Rate 2-63
Common Line 2-63
Common Channel Signalling 2-63
Communications System 2-63
Customer(s) 2-63
Customer Designated Premises 2-64
Customer Node 2-64

ACCESS SERVICE

TABLE OF CONTENTS (Cont'd)

Page No.

2. GENERAL REGULATIONS (Cont'd)

2.6 Definitions (Cont'd)

Data Transmission (107 Type) Test Line 2-64
Decibel 2-64
Decibel Reference Noise C-Message Weighting 2-64
Decibel Reference Noise C-Message Referenced to 0 2-64
Detail Billing 2-64
Digital Subscriber Line (DSL) 2-64.1
Digital Subscriber Line (DSL) Access Service Connection Point 2-64.1
Digital Switched 56 Service 2-64.1
Direct-Trunked Transport 2-64.1
Directory Assistance (Interstate) 2-65
Directory Assistance Location (Interstate) 2-65
Downstream 2-65
Dual Tone Multifrequency Address Signaling 2-65
Echo Control 2-65
Echo Path Loss 2-65
Echo Return Loss 2-65
Effective - 2-wire 2-66
Effective - 4-wire 2-66
End Office 2-66
End User 2-66
Enhanced Service 2-67
Entrance Facility 2-67
Entry Switch 2-67
Envelope Delay Distortion 2-67
Equal Level Echo Path Loss 2-67
Ethernet ..... 2-67 (N)
Exchange ..... 2-67.1 (T)
Exit Message ..... 2-67.1 (T)
Expected Measured Loss 2-68
Extended Area Service 2-68
Extended PVC 2-68

ACCESS SERVICE

TABLE OF CONTENTS (Cont'd)

Page No.

2. GENERAL REGULATIONS (Cont'd)

2.6 Definitions (Cont'd)

First Point of Switching 2-68
Frame 2-68
Frame Relay Access Connection (FRAC) ..... 2-68 (N)
Frame Relay Access Customer Port 2-68
Frame Relay Access Service 2-68.1
Frame Relay End User Port 2-68.1
Frame Relay Inter-network Connection (FRIC) ..... 2-68.1 (N)
Frame Relay Inter-network Customer Port ..... 2-68.1 (N)
Frequency Shift 2-68.1
Grandfathered 2-68.1
Host Central Office 2-68.1
Hub 2-68.1
Immediately Available Funds 2-69
Impedance Balance 2-69
Impulse Noise 2-69
Individual Case Basis 2-69
Initial Address Message 2-69
Inserted Connection Loss 2-69
Installation and Repair Technician 2-70
Interexchange Carrier (IC) or Interexchange Common Carrier 2-70
Intermediate Hub 2-70
Intermodulation Distortion 2-70
Interstate Communications 2-70
Intrastate Communications 2-70
Legal Holiday 2-71
Line Side Connection 2-71
Local Access and Transport Area (LATA) 2-71
Local Area Network 2-71
Local Number Portability (LNP) ..... 2-71 (N)
Location Routing Number (LRN) ..... 2-71 (N)
Loss Deviation ..... 2-71.1 (T)
Major Fraction Thereof ..... 2-71.1 (T)

Certain material formerly found on this page now appears on Original Page 0-7.1.

ACCESS SERVICE

TABLE OF CONTENTS (Cont'd)

Page No.

2. GENERAL REGULATIONS (Cont'd)

2.6 Definitions (Cont'd)

Message 2-71.1
Milliwatt (102 Type) Test Line ..... 2-71.1 (T)
N-1 Carrier 2-72
Network Control Signaling 2-72
Nonpublished Number ..... 2-72 (N)
Nonsynchronous Test Line 2-72
North American Numbering Plan 2-72
Off-hook 2-72
On-hook 2-73
Open Circuit Test Line 2-73
Optical Carrier Channel 2-73
Optical Carrier Rate (OC-N) 2-73
Optical Carrier Rate Concatenated 2-73
Optical Line Termination 2-73
Originating Direction 2-73
Pay Telephone 2-73
Payphone Service Provider 2-73.1
Permanent Virtual Connection (PVC) 2-73.1
Phase Jitter 2-73.1
Point of Termination 2-73.1
Premises 2-73
Primary Exchange Carrier 2-74
Release Message 2-74
Remote Switching Modules/Systems 2-74
Return Loss 2-74
Registered Equipment 2-74
Signal Transfer Point (STP) 2-74
Service Access Code 2-75
Service Switching Point (SSP) 2-75
Serving Wire Center 2-75
Seven Digit Manual Test Line 2-75
Shortage of Facilities or Equipment 2-75
Short Circuit Test Line 2-75
Signal-To-C-Notched Noise Ratio 2-75
Signaling Point (SP) 2-76
Signaling Point of Interface (SPOI) 2-76
Signaling System 7 (SS7) 2-76
Signaling Transfer Point (STP) 2-76
Signal Transfer Point (STP) Port 2-76
Signaling Return Loss 2-76
Special Order 2-76
Standard PVC 2-76
Study Area 2-77
Subtending End Office of an Access Tandem 2-76
Super Intermediate Hub 2-76
Synchronous Optical Network (SONET) 2-77
Synchronous Test Line 2-77
Synchronous Transport Signal (STS) 2-77
Tandem Switched Transport 2-77.1
Terminating Direction 2-77.1
Terminus Hub 2-77.1
Throughput 2-77.1
Transmission Measuring (105 Type) Test Line/Responder 2-77.1

ACCESS SERVICE

TABLE OF CONTENTS (Cont'd)

Page No.

2. GENERAL REGULATIONS (Cont'd)

2.6 Definitions (Cont'd)

Transmission Path 2-77.1
Trunk 2-77
Trunk Group 2-78
Trunk Side Connection 2-78
Two-Wire to Four-Wire Conversion 2-78
Unlisted Number ..... 2-78 (N)
Upstream 2-78
V and H Coordinates Method 2-78
WATS Serving Office 2-78
Wireless Switching Center 2-78
Wire Center ..... 2-79 (T)

ACCESS SERVICE

TABLE OF CONTENTS (Cont'd)

Page No.

3. CARRIER COMMON LINE ACCESS SERVICE AND FEDERAL UNIVERSAL SERVICE CHARGE ..... 3-1 (T) (T)

3.1 General Description 3-1

3.2 Limitations 3-2

3.2.1 Exclusions 3-2
3.2.2 Access Groups 3-2
3.2.3 WATS Access Lines 3-2

3.3 Undertaking of the Telephone Company 3-3

3.3.1 Provision of Service 3-3
3.3.2 Interstate and Intrastate Use 3-3

3.4 Obligations of the Customer 3-3

3.4.1 Switched Access Service Requirement 3-3
3.4.2 Supervision 3-3

3.5 Determination of Usage Subject to Carrier Common Line Access Charges 3-4

3.5.1 Determination of Jurisdiction 3-4
3.5.2 Cases Involving Usage Recording By the Customer 3-4
3.5.3 Local Exchange Access and the Enhanced Services Exemption 3-5

ACCESS SERVICE

TABLE OF CONTENTS (Cont'd)

Page No.

3. CARRIER COMMON LINE ACCESS SERVICE AND FEDERAL UNIVERSAL SERVICE CHARGE (Cont'd) (T) (T)

3.6 Resold Services 3-5

3.6.1 Scope 3-5
3.6.2 Customer Obligations Concerning the Resale of MTS and MTS-type Services 3-6
3.6.3 Resale Documentation Provided by the Customer 3-7
3.6.4 Rate Regulations Concerning the Resale of MTS and MTS-type Services 3-8

3.8 Rate Regulations 3-20

3.8.1 Billing of Charges 3-20
3.8.2 Measuring and Recording of Call Detail 3-20
3.8.3 Unmeasured Feature Group A and B Usage 3-21
3.8.4 Percent Interstate Use (PIU) 3-21
3.8.5 Determination of Premium and Non-Premium Charges 3-22

3.9 Federal Universal Service Charge ..... 3-25 (N)

3.9.1 Rate Application ..... 3-25 (N)

ACCESS SERVICE

TABLE OF CONTENTS (Cont'd)

Page No.

4. END USER ACCESS SERVICE 4-1

4.1 General Description 4-1

4.2 Limitations 4-1

4.3 Undertaking of the Telephone Company 4-1

4.4 Obligations of Radio Common Carriers 4-2

4.5 Payment Arrangements and Credit Allowances 4-2

4.5.1 Minimum Period 4-2
4.5.2 Cancellation of Orders 4-2
4.5.3 Changes to Orders 4-2
4.5.4 Allowance for Interruptions 4-2
4.5.5 Temporary Suspension of Service 4-2

4.6 Rate Regulations 4-3

4.6.1 Who Is Billed 4-3
4.6.2 Multiparty Service 4-3
4.6.3 Pay Telephone Service 4-3
4.6.4 Business Services 4-3
4.6.5 Radio Common Carriers 4-6
4.6.6 Remote Call Forwarding 4-6
4.6.7 Residence Services 4-7
4.6.8 End User Port Charge ..... 4-7 (N)

ACCESS SERVICE

TABLE OF CONTENTS (Cont'd)

Page No.

5. ACCESS ORDERING 5-1

5.1 General 5-1

5.1.1 Service Installation 5-2
5.1.2 Expedited Orders 5-3
5.1.3 Selection of Facilities for Access Orders 5-4

5.2 Ordering Requirements 5-5

5.2.1 Switched Access Service 5-5
5.2.2 Special Access Service 5-11
5.2.3 WATS or WATS-type Service 5-13
5.2.4 Mixed Use Facilities - Switched and Special Access 5-13
5.2.5 Miscellaneous Services 5-14
5.2.6 Frame Relay Access Service ..... 5-14.1 (N)

5.3 Access Orders for Services Provided by More Than One Telephone Company 5-15

5.3.1 Non Meet Point Billing Ordering 5-15
5.3.2 Meet Point Billing Ordering 5-16

5.4 Charges Associated with Access Ordering 5-18

5.4.1 Access Order Charge 5-18
5.4.2 Miscellaneous Service Order Charge 5-19
5.4.3 Access Order Change Charges 5-20

5.5 Minimum Periods and Cancellations 5-23

5.5.1 Minimum Periods 5-23
5.5.2 Development of Minimum Period Charges 5-23
5.5.3 Cancellation of an Access Order 5-24
5.5.4 Partial Cancellation Charge 5-26

ACCESS SERVICE

TABLE OF CONTENTS (Cont'd)

Page No.

6 SWITCHED ACCESS SERVICE 6-1

6.1 General 6-1

6.1.1 Description and Provision of Switched Access Service Arrangements 6-2
6.1.2 Ordering Options and Conditions 6-5
6.1.3 Rate Categories 6-5
6.1.4 Special Facilities Routing ..... 6-21.1 (M)
6.1.5 Design Layout Report ..... 6-21.1 (M)

6.2 Undertaking of the Telephone Company 6-22

6.2.1 Network Management 6-22
6.2.2 Transmission Specifications 6-23
6.2.3 Provision of Service Performance Data 6-24
6.2.4 Testing 6-24
6.2.5 Determination of Number of Transmission Paths 6-26
6.2.6 Trunk Group Measurement Reports 6-27

6.3 Obligations of the Customer 6-28

6.3.1 Report Requirements 6-28
6.3.2 Trunk Group Measurement Reports 6-29
6.3.3 Supervisory Signaling 6-29
6.3.4 Short Duration Mass Calling Requirements 6-29

ACCESS SERVICE

TABLE OF CONTENTS (Cont'd)

Page No.

6. SWITCHED ACCESS SERVICE (Cont'd)

6.4 Rate Regulations 6-30

6.4.1 Description and Application of Rates and Charges 6-30
6.4.2 Minimum Monthly Charge 6-45
6.4.3 Change of Switched Access Service Arrangements 6-46
6.4.4 Moves 6-47
6.4.5 Local Information Delivery Services 6-47
6.4.6 Mileage Measurement 6-48
6.4.7 Mixed Use 6-53
6.4.8 Message Unit Credit for Feature Group A 6-53
6.4.9 Application of Rates for Feature Group A Extension Service 6-54

6.5 Description and Provision of Feature Group A (FGA) 6-55

6.5.1 Description 6-55
6.5.2 Optional Features 6-59
6.5.3 Optional Features Provided in Local Tariffs 6-61
6.5.4 Measuring Access Minutes 6-61
6.5.5 Testing Capabilities 6-65

6.6 Description and Provision of Feature Group B (FGB) 6-66

6.6.1 Description 6-66
6.6.2 Optional Features 6-70
6.6.3 Design and Traffic Routing 6-72
6.6.4 Measuring Access Minutes 6-72
6.6.5 Testing Capabilities 6-77

ACCESS SERVICE

TABLE OF CONTENTS (Cont'd)

Page No.

6. SWITCHED ACCESS SERVICE (Cont'd)

6.7 Description and Provision of Feature Group C (FGC) 6-78

6.7.1 Description 6-78
6.7.2 Optional Features 6-83
6.7.3 Design and Traffic Routing 6-86
6.7.4 Measuring Access Minutes 6-87
6.7.5 Design Blocking Probability 6-91
6.7.6 Testing Capabilities 6-93

6.8 Description and Provision of Feature Group D (FGD) 6-94

6.8.1 Description 6-94
6.8.2 Optional Features 6-99
6.8.3 Design and Traffic Routing 6-101
6.8.4 Measuring Access Minutes 6-101
6.8.5 Design Blocking Probability 6-104
6.8.6 Network Blocking Charge 6-106
6.8.7 Testing Capabilities 6-107

6.9 Chargeable and Nonchargeable Optional Features 6-108

6.9.1 Common Switching Nonchargeable Optional Features 6-109
6.9.2 Transport Termination Nonchargeable Optional Features 6-124
6.9.3 Chargeable Optional Features 6-126

6.10 Database Services ..... 6-131 (N)

6.10.1 Service Provider Number Portability (SPNP) Service ..... 6-131 (N)

ACCESS SERVICE

TABLE OF CONTENTS (Cont'd)

Page No.

7. SPECIAL ACCESS SERVICE 7-1

7.1 General 7-1

7.1.1 Channel Types 7-1
7.1.2 Service Descriptions 7-4
7.1.3 Service Configurations 7-6
7.1.4 Alternate Use 7-11
7.1.5 Special Facilities Routing 7-11
7.1.6 Design Layout Report 7-11
7.1.7 Acceptance Testing 7-12
7.1.8 Ordering Options and Conditions 7-12

7.2 Rate Regulations 7-13

7.2.1 Rate Categories 7-13
7.2.2 Types of Rates and Charges 7-16
7.2.3 Moves 7-20
7.2.4 Minimum Periods 7-21
7.2.5 Mileage Measurement 7-22
7.2.6 Facility Hubs 7-23
7.2.7 Mixed Use Analog and Digital High Capacity Services 7-26
7.2.8 High Capacilty Optional Rate Plans 7-27
7.2.9 Other Optional Rate Plans ..... 7-34.1 (N)

7.3 Surcharge For Special Access Service 7-35

7.3.1 General 7-35
7.3.2 Application 7-35
7.3.3 Exemption of Special Access Service 7-36
7.3.4 Rate Regulations 7-37

ACCESS SERVICE

TABLE OF CONTENTS (Cont'd)

Page No.

7. SPECIAL ACCESS SERVICE (Cont'd)

7.4 Metallic Service

7.4.1 Basic Channel Description 7-39
7.4.2 Technical Specifications Packages and Network Channel Interface 7-39
7.4.3 Optional Features and Functions 7-39

7.5 Telegraph Grade Service 7-40

7.5.1 Basic Channel Description 7-40
7.5.2 Technical Specifications Packages andNetwork Channel Interfaces 7-40
7.5.3 Optional Features and Functions 7-40

7.6 Voice Grade Service 7-41

7.6.1 Basic Channel Description 7-41
7.6.2 Technical Specifications Packages and Network Channel Interfaces 7-41
7.6.3 Optional Features and Functions 7-41

7.7 Program Audio Service 7-49

7.7.1 Basic Channel Description 7-49
7.7.2 Technical Specifications Packages and Network Channel Interfaces 7-49
7.7.3 Optional Features and Functions 7-49

7.8 Video Service 7-51

7.8.1 Basic Channel Description 7-51
7.8.2 Technical Specifications Packages and Network Channel Interfaces 7-51

ACCESS SERVICE

TABLE OF CONTENTS (Cont'd)

Page No.

7. SPECIAL ACCESS SERVICE (Cont'd)

7.9 Digital Data Service 7-52

7.9.1 Basic Channel Description 7-52
7.9.2 Technical Specifications Packages and Network Channel Interfaces 7-52
7.9.3 Optional Features and Functions 7-53

7.10 High Capacity Service 7-54

7.10.1 Basic Channel Description 7-54
7.10.2 Technical Specifications Packages and Network Channel Interfaces 7-55
7.10.3 Optional Features and Functions 7-56

7.11 Synchronous Optical Channel Service ..... 7-59 (C)

7.11.1 Basic Channel Description 7-59
7.11.2 Network Channel Interfaces 7-60
7.11.3 Optional Features and Functions ..... 7-60 (C)

7.12 Digital Access Cross Connect Service ..... 7-62 (N)

7.12.1 Service Description 7-62
7.12.2 Service Configuration 7-62

7.13 Individual Case Filings ..... 7-63 (M)

ACCESS SERVICE

TABLE OF CONTENTS (Cont'd)

Page No.

9. RESERVED FOR FUTURE USE 9-1

ACCESS SERVICE

TABLE OF CONTENTS (Cont'd)

Page No.

10. SPECIAL FEDERAL GOVERNMENT ACCESS SERVICES 10-1

10.1 General 10-1

10.2 Emergency Conditions 10-2

10.3 Facility Availability 10-2

10.4 Federal Government Regulations 10-2

10.5 Service Offerings to the Federal Government 10-3

10.5.1 Type and Description 10-3
10.5.2 Mileage Application 10-6

10.6 Rates and Charges 10-7

10.6.1 General 10-7
10.6.2 Voice Grade Special Access 10-7
10.6.3 Move Charges 10-7

11. SPECIAL FACILITIES ROUTING OF ACCESS SERVICES 11-1

11.1 Description 11-1

11.1.1 Diversity 11-1
11.1.2 Avoidance 11-1
11.1.3 Diversity and Avoidance Combined 11-1
11.1.4 Cable-Only Facilities 11-1

12. SPECIAL CONSTRUCTION 12-1

ACCESS SERVICE

TABLE OF CONTENTS (Cont'd)

Page No.

13. ADDITIONAL ENGINEERING, ADDITIONAL LABOR AND MISCELLANEOUS SERVICES 13-1

13.1 Additional Engineering 13-1

13.2 Additional Labor 13-2

13.2.1 Overtime Installation 13-2
13.2.2 Overtime Repair 13-2
13.2.3 Stand by 13-2
13.2.4 Testing and Maintenance with Other Telephone Companies 13-2
13.2.5 Other Labor 13-2

13.3 Miscellaneous Services 13-3

13.3.1 Testing Services 13-3
13.3.2 Maintenance of Service 13-10
13.3.3 Telecommunications Service Priority 13-10
13.3.4 Miscellaneous Equipment 13-11

13.4 Presubscription 13-13

13.5 (D)

13.6 Unauthorized Primary Interexchange Carrier (PIC) Change ..... 13-18 (C)

13.7 (D)

13.8 Blocking Service 13-19

13.8.1 International Blocking Service 13-19
13.8.2 900 Blocking Service 13-20.1

13.9 Billing Name and Address Service 13-21

13.9.1 General Description 13.21

13.9.2 Undertaking of the Telephone Company 13-21.1

13.9.3 Obligations of the Customer 13-22

13.9.4 Rate Regulations 13-22

13.10 Originating Line Screening (OLS) Service 13-23

13.11 Nonchargeable Confirmation Services 13-23

13.11.1 Billed Number Screening (BNS) 13-23

13.11.2 Originating Line Screening (OLS) 13-23

13.12 Coin Supervision Additive Service 13-23

ACCESS SERVICE

TABLE OF CONTENTS (Cont'd)

Page No.

13.13 Central Office Blocking Service 13-24

13.14 Flexible Automatic Number Identification Service 13-25

14. RESERVED FOR FUTURE USE 14-1

15. ACCESS SERVICE INTERFACES AND TRANSMISSION SPECIFICATIONS 15-1

15.1 Switched Access Service 15-1

15.1.1 Local Transport Interface Groups 15-1
15.1.2 Standard Transmission Specifications 15-11
15.1.3 Data Transmission Parameters 15-20

15.2 Special Access Service 15-24

15.2.1 Network Channel (NC) Codes 15-27
15.2.2 Network Channel Interface (NCI) Codes 15-36

16. PUBLIC PACKET DATA NETWORK 16-1

16.1 Frame Relay Service 16-1

16.1.1 General 16-1
16.1.2 Rate Regulations 16-5
16.1.3 Optional Rate Plans ..... 16-11.1 (N)

16.2 Asymmetrical Digital Subscriber Line (ADSL) Service 16-12

16.2.1 General Description 16-12
16.2.2 Rate Regulations 16-15
16.2.3 ADSL Service Discount Pricing Arrangement ..... 16-20.1 (N)

16.3 Symmetrical Digital Subscriber Line (SDSL) Service 16-21

16.3.1 General 16-21
16.3.2 Limitations 16-23
16.3.3 Undertaking of the Telephone Company 16-24
16.3.4 Obligations of the Customer 16-24
16.3.5 Rate Regulations 16-25

16.4 Telecommunications Service Provider Service Access (TSPSA) 16-27

16.4.1 General Description 16-27
16.4.2 Service Provisioning 16-28
16.4.3 Ordering Specifications and Provisions 16-30
16.4.4 Limitations 16-33
16.4.5 Rate Elements 16-35
16.4.6 Rate Applications 16-37
16.4.7 Term Pricing 16-38

ACCESS SERVICE

TABLE OF CONTENTS (Cont'd)

Page No.

17. PUBLIC PACKET DATA NETWORK (Cont'd) ..... 16-1 (N)

16.5 Multi-Megabit Ethernet Transmission Service (METS) 16-41

16.5.1 General Description 16-41
16.5.2 Typical Arrangements 16-42
16.5.3 Rate Regulations 16-45

16.6 High Speed Internet (HSI) Access Service 16-51

16.6.1 General Description 16-51
16.6.2 Rate Regulations 16-55

16.7 Asynchronous Transfer Mode Cell Relay Access Service (ATM-CRS) 16-61

16.7.1 General 16-61
16.7.2 Service Description 16-61
16.7.3 Obligations of the Customer 16-62
16.7.4 Rate Regulations 16-62

16.8 Wholesale Digital Subscriber Line (DSL) Transport Service 16-79

16.8.1 General 16-79
16.8.2 Service Description 16-79
16.8.3 Service Classes and Options 16-82
16.8.4 DSL Provisioning 16-84
16.8.5 DSL Rate Regulations ..... 16-87 (N)

ACCESS SERVICE

TABLE OF CONTENTS (Cont'd)

Page No.

17. RATES AND CHARGES - General 17-1

17.1 Common Line Access Service, End User Port Charges, and Federal Universal Service Charge (T)
- Warwick Valley Telephone Company 17-2

17.1.1 Carrier Common Line Access Service 17-2
17.1.2 End User Access Service 17-2
17.1.3 Federal Universal Service Charge 17-4
17.1.4 End User Port Charges ..... 17-4 (N)

17.2 Switched Access Service - Warwick Valley Telephone Company 17-5

17.2.1 Nonrecurring Charges 17-5
17.2.2 Local Transport 17-5
17.2.3 End Office 17-8
17.2.4 Reserved for Future Use 17-9
17.2.5 Assumed Minutes of Use 17-10
17.2.6 Operator Transfer Service 17-10

17.3 Special Access Service - Warwick Valley Telephone Company 17-11

17.3.1 Surcharge for Special Access Service 17-11
17.3.2 Metallic Service 17-12
17.3.3 Telegraph Grade Service 17-13
17.3.4 Voice Grade Service 17-14
17.3.5 Program Audio Service 17-18
17.3.6 Video Service 17-20
17.3.7 Digital Data Service 17-21
17.3.8 High Capacity Service 17-23
17.3.9 Individual Case Filings 17-26
17.3.10 High Capacity Optional Rate Plan Availability 17-27

17.4 Other Services - Warwick Valley Telephone Company 17-28

17.4.1 Access Ordering 17-28
17.4.2 Additional Engineering 17-29
17.4.3 Additional Labor 17-31
17.4.4 Miscellaneous Services 17-33
17.4.5 Special Federal Government Access Services 17-36
17.4.6 Special Facilities Routing of Access Services 17-37
17.4.7 Specialized Service or Arrangements 17-38

ACCESS SERVICE

TABLE OF CONTENTS (Cont'd)

Page No.

17. RATES AND CHARGES - General 17-38

17.1 Common Line Access Service - Concord Telephone Company 17-38

17.1.1 Carrier Common Line Access Service 17-38
17.1.2 End User Access Service 17-38
17.1.3 Lifeline Assistance and Universal Service Fund Charges 17-40

17.2 Switched Access Service - Concord Telephone Company 17-41

17.2.1 Nonrecurring Charges 17-42
17.2.2 Local Transport 17-46
17.2.3 End Office 17-46
17.2.4 Reserved for Future Use 17-46
17.2.5 Assumed Minutes of Use 17-47
17.2.6 Operator Transfer Service 17-47

17.3 Special Access Service - Concord Telephone Company 17-48

17.3.1 Surcharge for Special Access Service 17-49
17.3.2 Metallic Service 17-49
17.3.3 Telegraph Grade Service 17-50
17.3.4 Voice Grade Service 17-51
17.3.5 Program Audio Service 17-55
17.3.6 Video Service 17-57
17.3.7 Digital Data Service 17-58
17.3.8 High Capacity Service 17-60
17.3.9 Individual Case Filings 17-63
17.3.10 High Capacity Optional Rate Plan Availability 17-64

17.4 Other Services - Concord Telephone Company 17-65

17.4.1 Access Ordering 17-65
17.4.2 Additional Engineering 17-66
17.4.3 Additional Labor 17-67
17.4.4 Miscellaneous Services 17-69
17.4.5 Special Federal Government Access Services 17-74
17.4.6 Special Facilities Routing of Access Services 17-75
17.4.7 Specialized Service or Arrangements 17-76
17.4.8 Public Packet Data Network ..... 17-76.1 (N)

Emmanuel Staurulakis
Vice President - Operations
6315 Seabrook Road, Seabrook, Maryland 20706

ACCESS SERVICE

TABLE OF CONTENTS (Cont'd)

Page No.

17. RATES AND CHARGES - General 17-77

17.1 Common Line Access Service - Atlantic Telephone Membership Corporation ... 17-77

17.1.1 Carrier Common Line Access Service 17-77
17.1.2 End User Access Service 17-77
17.1.3 Lifeline Assistance and Universal Service Fund Charges 17-77

17.2 Switched Access Service - Atlantic Telephone Membership Corporation 17-78

17.2.1 Nonrecurring Charges 17-78
17.2.2 Local Transport 17-79
17.2.3 End Office 17-81
17.2.4 Reserved for Future Use 17-83
17.2.5 Assumed Minutes of Use 17-84

17.3 Special Access Service - Atlantic Telephone Membership Corporation 17-85

17.3.1 Surcharge for Special Access Service 17-85
17.3.2 Metallic Service 17-86
17.3.3 Telegraph Grade Service 17-87
17.3.4 Voice Grade Service 17-88
17.3.5 Program Audio Service 17-92
17.3.6 Video Service 17-94
17.3.7 Digital Data Service 17-95
17.3.8 High Capacity Service 17-97
17.3.9 Individual Case Filings 17-100

17.4 Other Services - Atlantic Telephone Membership Corporation 17-101

17.4.1 Access Ordering 17-101
17.4.2 Additional Engineering 17-102
17.4.3 Additional Labor 17-103
17.4.4 Miscellaneous Services 17-105
17.4.5 Special Federal Government Access Services 17-110
17.4.6 Special Facilities Routing of Access Services 17-111
17.4.7 Specialized Service or Arrangements 17-112
17.4.8 Public Packet Data Network ..... 17-112.1 (N)

(D)

ACCESS SERVICE

TABLE OF CONTENTS (Cont'd)

Page No.

17. RATES AND CHARGES - General 17-113

17.1 Common Line Access Service - Coastal Utilities, Inc. 17-113

17.1.1 Carrier Common Line Access Service 17-113
17.1.2 End User Access Service 17-113
17.1.3 Lifeline Assistance and Universal Service Fund Charges 17-113

17.2 Switched Access Service - Coastal Utilities, Inc. 17-114

17.2.1 Nonrecurring Charges 17-114
17.2.2 Local Transport 17-115
17.2.3 End Office 17-116
17.2.4 Reserved for Future Use 17-117
17.2.5 Assumed Minutes of Use 17-118
17.2.6 Operator Transfer Service 17-118

17.3 Special Access Service - Coastal Utilities, Inc. 17-119

17.3.1 Surcharge for Special Access Service 17-119
17.3.2 Metallic Service 17-120
17.3.3 Telegraph Grade Service 17-121
17.3.4 Voice Grade Service 17-122
17.3.5 Program Audio Service 17-126
17.3.6 Video Service 17-128
17.3.7 Digital Data Service 17-129
17.3.8 High Capacity Service 17-131
17.3.9 Individual Case Filings 17-134

17.4 Other Services - Coastal Utilities, Inc. 17-135

17.4.1 Access Ordering 17-135
17.4.2 Additional Engineering 17-136
17.4.3 Additional Labor 17-137
17.4.4 Miscellaneous Services 17-139
17.4.5 Special Federal Government Access Services 17-144
17.4.6 Special Facilities Routing of Access Services 17-145
17.4.7 Specialized Service or Arrangements 17-146
17.4.8 Public Packet Data Network ..... 17-146.1 (Z)

ACCESS SERVICE

TABLE OF CONTENTS (Cont'd)

Page No.

17. RATES AND CHARGES - General 17-147

17.1 Common Line Access Service - Farmers Telephone Cooperative, Inc. 17-147

17.1.1 Carrier Common Line Access Service 17-147
17.1.2 End User Access Service 17-147
17.1.3 Lifeline Assistance and Universal Service Fund Charges 17-147

17.2 Switched Access Service - Farmers Telephone Cooperative, Inc. 17-148

17.2.1 Nonrecurring Charges 17-148
17.2.2 Local Transport 17-149
17.2.3 End Office 17-151
17.2.4 Reserved for Future Use 17-152
17.2.5 Assumed Minutes of Use 17-153

17.3 Special Access Service - Farmers Telephone Cooperative, Inc. 17-154

17.3.1 Surcharge for Special Access Service 17-154
17.3.2 Metallic Service 17-155
17.3.3 Telegraph Grade Service 17-156
17.3.4 Voice Grade Service 17-157
17.3.5 Program Audio Service 17-161
17.3.6 Video Service 17-163
17.3.7 Digital Data Service 17-164
17.3.8 High Capacity Service 17-166
17.3.9 Individual Case Filings 17-169

17.4 Other Services - Farmers Telephone Cooperative, Inc. 17-170

17.4.1 Access Ordering 17-170
17.4.2 Additional Engineering 17-171
17.4.3 Additional Labor 17-172
17.4.4 Miscellaneous Services 17-173
17.4.5 Special Federal Government Access Services 17-179
17.4.6 Special Facilities Routing of Access Services 17-180
17.4.7 Specialized Service or Arrangements 17-181
17.4.8 Public Packet Data Network ..... 17-181.1 (N)

ACCESS SERVICE

TABLE OF CONTENTS (Cont'd)

Page No.

17. RATES AND CHARGES - General 17-182

17.1 Common Line Access Service - Hargray Telephone Company, Inc. 17-182

17.1.1 Carrier Common Line Access Service 17-182
17.1.2 End User Access Service 17-182
17.1.3 Lifeline Assistance and Universal Service Fund Charges 17-182

17.2 Switched Access Service - Hargray Telephone Company, Inc. 17-183

17.2.1 Nonrecurring Charges 17-183
17.2.2 Local Transport 17-184
17.2.3 End Office 17-186
17.2.4 Reserved for Future Use 17-187
17.2.5 Assumed Minutes of Use 17-188

17.3 Special Access Service - Hargray Telephone Company, Inc. 17-189

17.3.1 Surcharge for Special Access Service 17-189
17.3.2 Metallic Service 17-190
17.3.3 Telegraph Grade Service 17-191
17.3.4 Voice Grade Service 17-192
17.3.5 Program Audio Service 17-196
17.3.6 Video Service 17-198
17.3.7 Digital Data Service 17-199
17.3.8 High Capacity Service 17-201
17.3.9 Individual Case Filings 17-204

17.4 Other Services - Hargray Telephone Company, Inc. 17-205

17.4.1 Access Ordering 17-205
17.4.2 Additional Engineering 17-206
17.4.3 Additional Labor 17-207
17.4.4 Miscellaneous Services 17-209
17.4.5 Special Federal Government Access Services 17-214
17.4.6 Special Facilities Routing of Access Services 17-215
17.4.7 Specialized Service or Arrangements 17-216
17.4.8 Public Packet Data Network ..... 17-216.1 (N)

ACCESS SERVICE

TABLE OF CONTENTS (Cont'd)

Page No.

17. RATES AND CHARGES - General 17-217

17.1 Common Line Access Service-Horry Telephone Cooperative, Inc. 17-217

17.1.1 Carrier Common Line Access Service 17-217
17.1.2 End User Access Service 17-217
17.1.3 Lifeline Assistance and Universal Service Fund Charges 17-217

17.2 Switched Access Service - Horry Telephone Cooperative, Inc. 17-218

17.2.1 Nonrecurring Charges 17-218
17.2.2 Local Transport 17-219
17.2.3 End Office 17-221
17.2.4 Reserved for Future Use 17-222
17.2.5 Assumed Minutes of Use 17-223

17.3 Special Access Service - Horry Telephone Cooperative, Inc. 17-224

17.3.1 Surcharge for Special Access Service 17-224
17.3.2 Metallic Service 17-225
17.3.3 Telegraph Grade Service 17-226
17.3.4 Voice Grade Service 17-227
17.3.5 Program Audio Service 17-231
17.3.6 Video Service 17-233
17.3.7 Digital Data Service 17-234
17.3.8 High Capacity Service 17-236
17.3.9 Individual Case Filings 17-239

17.4 Other Services - Horry Telephone Cooperative, Inc. 17-240

17.4.1 Access Ordering 17-240
17.4.2 Additional Engineering 17-241
17.4.3 Additional Labor 17-242
17.4.4 Miscellaneous Services 17-244
17.4.5 Special Federal Government Access Services 17-249
17.4.6 Special Facilities Routing of Access Services 17-250
17.4.7 Specialized Service or Arrangements 17-251
17.4.8 Public Packet Data Network ..... 17-251.1 (N)

ACCESS SERVICE

TABLE OF CONTENTS (Cont'd)

Page No.

17. RATES AND CHARGES - General ..... 17-252 (T)(x)

17.1 Common Line Access Service-Millington Telephone Company, Inc. 17-252

17.1.1 Carrier Common Line Access Service 17-252
17.1.2 End User Access Service 17-252
17.1.3 Lifeline Assistance and Universal Service Fund Charges 17-252

17.2 Switched Access Service - Millington Telephone Company, Inc. 17-253

17.2.1 Nonrecurring Charges 17-253
17.2.2 Local Transport 17-254
17.2.3 End Office 17-255
17.2.4 Reserved for Future Use 17-257
17.2.5 Assumed Minutes of Use 17-258

17.3 Special Access Service - Millington Telephone Company, Inc. 17-259

17.3.1 Surcharge for Special Access Service 17-259
17.3.2 Metallic Service 17-260
17.3.3 Telegraph Grade Service 17-261
17.3.4 Voice Grade Service 17-262
17.3.5 Program Audio Service 17-266
17.3.6 Video Service 17-268
17.3.7 Digital Data Service 17-269
17.3.8 High Capacity Service 17-271
17.3.9 Individual Case Filings 17-272

17.4 Other Services - Millington Telephone Company, Inc. 17-275

17.4.1 Access Ordering 17-275
17.4.2 Additional Engineering 17-276
17.4.3 Additional Labor 17-277
17.4.4 Miscellaneous Services 17-279
17.4.5 Special Federal Government Access Services 17-284
17.4.6 Special Facilities Routing of Access Services 17-285
17.4.7 Specialized Service or Arrangements ..... 17-286 (T)(x)

(x) Transferred from Millington Telephone Company, Inc. Tariff F.C.C. No. 1.

ACCESS SERVICE

TABLE OF CONTENTS (Cont'd)

Page No.

17. RATES AND CHARGES - General ..... 17-287 (T)(x)

17.1 Common Line Access Service - Mt. Horeb Telephone Company 17-287

17.1.1 Carrier Common Line Access Service 17-287
17.1.2 End User Access Service 17-287
17.1.3 Lifeline Assistance and Universal Service Fund Charges 17-287

17.2 Switched Access Service - Mt. Horeb Telephone Company 17-288

17.2.1 Nonrecurring Charges 17-288
17.2.2 Local Transport 17-289
17.2.3 End Office 17-291
17.2.4 Reserved for Future Use 17-291
17.2.5 Assumed Minutes of Use 17-293

17.3 Special Access Service - Mt. Horeb Telephone Company 17-294

17.3.1 Surcharge for Special Access Service 17-294
17.3.2 Metallic Service 17-295
17.3.3 Telegraph Grade Service 17-296
17.3.4 Voice Grade Service 17-297
17.3.5 Program Audio Service 17-301
17.3.6 Video Service 17-303
17.3.7 Digital Data Service 17-304
17.3.8 High Capacity Service 17-306
17.3.9 Individual Case Filings 17-309

17.4 Other Services - Mt. Horeb Telephone Company 17-310

17.4.1 Access Ordering 17-310
17.4.2 Additional Engineering 17-311
17.4.3 Additional Labor 17-312
17.4.4 Miscellaneous Services 17-314
17.4.5 Special Federal Government Access Services 17-318
17.4.6 Special Facilities Routing of Access Services 17-320
17.4.7 Specialized Service or Arrangements ..... 17-321 (T)(x)

(x) Transferred from Mt. Horeb Telephone Company Tariff F.C.C. No. 1.

ACCESS SERVICE

TABLE OF CONTENTS (Cont'd)

Page No.

17. RATES AND CHARGES - General 17-322

17.1 Common Line Access Service - Pineland Telephone Cooperative, Inc. 17-322

17.1.1 Carrier Common Line Access Service 17-322
17.1.2 End User Access Service 17-322
17.1.3 Lifeline Assistance and Universal Service Fund Charges 17-323

17.2 Switched Access Service - Pineland Telephone Cooperative, Inc. 17-324

17.2.1 Nonrecurring Charges 17-324
17.2.2 Local Transport 17-325
17.2.3 End Office 17-326
17.2.4 Reserved for Future Use 17-327
17.2.5 Assumed Minutes of Use 17-328

17.3 Special Access Service - Pineland Telephone Cooperative, Inc. 17-329

17.3.1 Surcharge for Special Access Service 17-329
17.3.2 Metallic Service 17-330
17.3.3 Telegraph Grade Service 17-331
17.3.4 Voice Grade Service 17-332
17.3.5 Program Audio Service 17-336
17.3.6 Video Service 17-338
17.3.7 Digital Data Service 17-339
17.3.8 High Capacity Service 17-341
17.3.9 Individual Case Filings 17-344

17.4 Other Services - Pineland Telephone Cooperative, Inc. 17-345

17.4.1 Access Ordering 17-345
17.4.2 Additional Engineering 17-346
17.4.3 Additional Labor 17-347
17.4.4 Miscellaneous Services 17-349
17.4.5 Special Federal Government Access Services 17-354
17.4.6 Special Facilities Routing of Access Services 17-355
17.4.7 Specialized Service or Arrangements 17-356
17.4.8 Public Packet Data Network ..... 17-356.1 (N)

ACCESS SERVICE

TABLE OF CONTENTS (Cont'd)

Page No.

(D)

(D)

ACCESS SERVICE

TABLE OF CONTENTS (Cont'd)

Page No.

17. RATES AND CHARGES - General 17-394

17.1 Common Line Access Service - Rock Hill Telephone Company 17-394

17.1.1 Carrier Common Line Access Service 17-394
17.1.2 End User Access Service 17-394
17.1.3 Lifeline Assistance and Universal Service Fund Charges 17-394

17.2 Switched Access Service - Rock Hill Telephone Company 17-395

17.2.1 Nonrecurring Charges 17-395
17.2.2 Local Transport 17-396
17.2.3 End Office 17-397
17.2.4 Reserved for Future Use 17-398
17.2.5 Assumed Minutes of Use 17-399

17.3 Special Access Service - Rock Hill Telephone Company 17-400

17.3.1 Surcharge for Special Access Service 17-400
17.3.2 Metallic Service 17-401
17.3.3 Telegraph Grade Service 17-402
17.3.4 Voice Grade Service 17-403
17.3.5 Program Audio Service 17-407
17.3.6 Video Service 17-409
17.3.7 Digital Data Service 17-410
17.3.8 High Capacity Service 17-412
17.3.9 Individual Case Filings 17-415
17.3.10 Synchronous Optical Channel Service 17-415.1

17.4 Other Services - Rock Hill Telephone Company 17-416

17.4.1 Access Ordering 17-416
17.4.2 Additional Engineering 17-417
17.4.3 Additional Labor 17-418
17.4.4 Miscellaneous Services 17-420
17.4.5 Special Federal Government Access Services 17-425
17.4.6 Special Facilities Routing of Access Services 17-426
17.4.7 Specialized Service or Arrangements 17-427
17.4.8 Public Packet Data Network ..... 17-427.1 (N)

ACCESS SERVICE

TABLE OF CONTENTS (Cont'd)

Page No.

17. RATES AND CHARGES - General 17-428

17.1 Common Line Access Service - Lancaster Telephone Company 17-428

17.1.1 Carrier Common Line Access Service 17-428
17.1.2 End User Access Service 17-428
17.1.3 Lifeline Assistance and Universal Service Fund Charges 17-428

17.2 Switched Access Service - Lancaster Telephone Company 17-429

17.2.1 Nonrecurring Charges 17-429
17.2.2 Local Transport 17-430
17.2.3 End Office 17-431
17.2.4 Reserved for Future Use 17-432
17.2.5 Assumed Minutes of Use 17-433

17.3 Special Access Service - Lancaster Telephone Company 17-434

17.3.1 Surcharge for Special Access Service 17-434
17.3.2 Metallic Service 17-435
17.3.3 Telegraph Grade Service 17-436
17.3.4 Voice Grade Service 17-437
17.3.5 Program Audio Service 17-441
17.3.6 Video Service 17-443
17.3.7 Digital Data Service 17-444
17.3.8 High Capacity Service 17-446
17.3.9 Individual Case Filings 17-449

17.4 Other Services - Lancaster Telephone Company 17-450

17.4.1 Access Ordering 17-450
17.4.2 Additional Engineering 17-451
17.4.3 Additional Labor 17-452
17.4.4 Miscellaneous Services 17-454
17.4.5 Special Federal Government Access Services 17-459
17.4.6 Special Facilities Routing of Access Services 17-460
17.4.7 Specialized Service or Arrangements 17-461
17.4.8 Public Packet Data Network ..... 17-461.1 (N)

ACCESS SERVICE

TABLE OF CONTENTS (Cont'd)

Page No.

17. RATES AND CHARGES - General 17-462

17.1 Common Line Access Service - Fort Mill Telephone Company 17-462

17.1.1 Carrier Common Line Access Service 17-462
17.1.2 End User Access Service 17-462
17.1.3 Lifeline Assistance and Universal Service Fund Charges 17-462

17.2 Switched Access Service - Fort Mill Telephone Company 17-463

17.2.1 Nonrecurring Charges 17-463
17.2.2 Local Transport 17-464
17.2.3 End Office 17-465
17.2.4 Reserved for Future Use 17-466
17.2.5 Assumed Minutes of Use 17-467

17.3 Special Access Service - Fort Mill Telephone Company 17-468

17.3.1 Surcharge for Special Access Service 17-468
17.3.2 Metallic Service 17-469
17.3.3 Telegraph Grade Service 17-470
17.3.4 Voice Grade Service 17-471
17.3.5 Program Audio Service 17-475
17.3.6 Video Service 17-477
17.3.7 Digital Data Service 17-478
17.3.8 High Capacity Service 17-480
17.3.9 Individual Case Filings 17-483

17.4 Other Services - Fort Mill Telephone Company 17-484

17.4.1 Access Ordering 17-484
17.4.2 Additional Engineering 17-485
17.4.3 Additional Labor 17-486
17.4.4 Miscellaneous Services 17-488
17.4.5 Special Federal Government Access Services 17-493
17.4.6 Special Facilities Routing of Access Services 17-494
17.4.7 Specialized Service or Arrangements 17-495
17.4.8 Public Packet Data Network ..... 17-495.1 (N)

ACCESS SERVICE

TABLE OF CONTENTS (Cont'd)

Page No.

17. RATES AND CHARGES - General 17-496

17.1 Common Line Access Service - Home Telephone Company 17-496

17.1.1 Carrier Common Line Access Service 17-496
17.1.2 End User Access Service 17-496
17.1.3 Lifeline Assistance and Universal Service Fund Charges 17-496

17.2 Switched Access Service - Home Telephone Company 17-497

17.2.1 Nonrecurring Charges 17-497
17.2.2 Local Transport 17-498
17.2.3 End Office 17-499
17.2.4 Reserved for Future Use 17-500
17.2.5 Assumed Minutes of Use 17-501

17.3 Special Access Service - Home Telephone Company 17-502

17.3.1 Surcharge for Special Access Service 17-502
17.3.2 Metallic Service 17-503
17.3.3 Telegraph Grade Service 17-504
17.3.4 Voice Grade Service 17-505
17.3.5 Program Audio Service 17-509
17.3.6 Video Service 17-511
17.3.7 Digital Data Service 17-512
17.3.8 High Capacity Service 17-514
17.3.9 Individual Case Filings 17-517

17.4 Other Services - Home Telephone Company 17-518

17.4.1 Access Ordering 17-518
17.4.2 Additional Engineering 17-519
17.4.3 Additional Labor 17-520
17.4.4 Miscellaneous Services 17-522
17.4.5 Special Federal Government Access Services 17-527
17.4.6 Special Facilities Routing of Access Services 17-528
17.4.7 Specialized Service or Arrangements 17-529
17.4.8 Public Packet Data Network ..... 17-529.1 (N)

ACCESS SERVICE

TABLE OF CONTENTS (Cont'd)

Page No.

17. RATES AND CHARGES - General ..... 17-530 (N)

17.1 Common Line Access Service - Star Telephone Membership Corporation. 17-530

17.1.1 Carrier Common Line Access Service 17-530
17.1.2 End User Access Service 17-530
17.1.3 Lifeline Assistance and Universal Service Fund Charges 17-530

17.2 Switched Access Service - Star Telephone Membership Corporation 17-531

17.2.1 Nonrecurring Charges 17-531
17.2.2 Local Transport 17-532
17.2.3 End Office 17-533
17.2.4 Reserved for Future Use 17-534
17.2.5 Assumed Minutes of Use 17-535

17.3 Special Access Service - Star Telephone Membership Corporation 17-536

17.3.1 Surcharge for Special Access Service 17-536
17.3.2 Metallic Service 17-537
17.3.3 Telegraph Grade Service 17-538
17.3.4 Voice Grade Service 17-539
17.3.5 Program Audio Service 17-543
17.3.6 Video Service 17-545
17.3.7 Digital Data Service 17-546
17.3.8 High Capacity Service 17-548
17.3.9 Individual Case Filings 17-551

17.4 Other Services - Star Telephone Membership Corporation. 17-552

17.4.1 Access Ordering 17-552
17.4.2 Additional Engineering 17-553
17.4.3 Additional Labor 17-554
17.4.4 Miscellaneous Services 17-556
17.4.5 Special Federal Government Access Services 17-561
17.4.6 Special Facilities Routing of Access Services 17-562
17.4.7 Specialized Service or Arrangements ..... 17-563 (N)

ACCESS SERVICE

TABLE OF CONTENTS (Cont'd)

Page No.

(D)

(D)

ACCESS SERVICE

TABLE OF CONTENTS (Cont'd)

Page No.

(D)

(D)

ACCESS SERVICE

TABLE OF CONTENTS (Cont'd)

Page No.

17. RATES AND CHARGES - General 17-631

17.1 Common Line Access Service, End User Port Charges and Federal Universal Service Charge – Interstate Telephone Company. ..... 17-631 (T)

17.1.1 Carrier Common Line Access Service 17-631
17.1.2 End User Access Service 17-631
17.1.3 Federal Universal Service Charge 17-631.1
17.1.4 End User Port Charges ..... 17-631.1 (N)

17.2 Switched Access Service – Interstate Telephone Company 17-632

17.2.1 Nonrecurring Charges 17-632
17.2.2 Local Transport 17-633
17.2.3 End Office 17-634
17.2.4 Reserved for Future Use 17-635
17.2.5 Assumed Minutes of Use 17-636
17.2.6 Operator Transfer Service 17-636

17.3 Special Access Service – Interstate Telephone Company 17-637

17.3.1 Surcharge for Special Access Service 17-637
17.3.2 Metallic Service 17-638
17.3.3 Telegraph Grade Service 17-639
17.3.4 Voice Grade Service 17-640
17.3.5 Program Audio Service 17-644
17.3.6 Video Service 17-645
17.3.7 Digital Data Service 17-646
17.3.8 High Capacity Service 17-648
17.3.9 Individual Case Filings 17-651

17.4 Other Services – Interstate Telephone Company 17-652

17.4.1 Access Ordering 17-652
17.4.2 Additional Engineering 17-653
17.4.3 Additional Labor 17-654
17.4.4 Miscellaneous Services 17-656
17.4.5 Special Federal Government Access Services 17-661
17.4.6 Special Facilities Routing of Access Services 17-662
17.4.7 Specialized Service or Arrangements 17-663

ACCESS SERVICE

TABLE OF CONTENTS (Cont'd)

Page No.

17. RATES AND CHARGES - General ..... 17-664 (N)

17.1 Common Line Access Service – Smart City Telecommunications LLC d/b/a Smart City Telecom. 17-664

17.1.1 Reserved 17-664
17.1.2 End User Access Service 17-664
17.1.3 Federal Universal Service Charge (FUSC) 17-664

17.2 Switched Access Service – Smart City Telecommunications LLC d/b/a Smart City Telecom 17-665

17.2.1 Nonrecurring Charges 17-665
17.2.2 Local Transport 17-667
17.2.3 End Office 17-669
17.2.4 Reserved for Future Use 17-671
17.2.5 Operator Transfer Service 17-671
17.2.6 Directory Assistance Service 17-672
17.2.7 Assumed Minutes of Use 17-674

17.3 Special Access Service – Smart City Telecommunications LLC d/b/a Smart City Telecom. 17-675

17.3.1 Surcharge for Special Access Service 17-675
17.3.2 Metallic Service 17-675
17.3.3 Telegraph Grade Service 17-676
17.3.4 Voice Grade Service 17-677
17.3.5 Program Audio Service 17-682
17.3.6 Video Service 17-684
17.3.7 Digital Data Service 17-685
17.3.8 High Capacity Service 17-687
17.3.9 Individual Case Filings 17-690
17.3.10 Synchronous Optical Channel Service 17-691

17.4 Other Services – Smart City Telecommunications LLC d/b/a Smart City Telecom 17-693

17.4.1 Access Ordering 17-693
17.4.2 Additional Engineering 17-694
17.4.3 Additional Labor 17-695
17.4.4 Miscellaneous Services 17-697
17.4.5 Special Federal Government Access Services 17-702
17.4.6 Special Facilities Routing of Access Services 17-703
17.4.7 Specialized Service or Arrangements 17-704
17.4.8 Wholesale Digital Subscriber Line (DSL) Transport Service 17-705
17.4.9 Asynchronous Transfer Mode (ATM) Service ..... 17-709 (N)

ACCESS SERVICE

CONCURRING CARRIERS

NONE

CONNECTING CARRIERS

NO CONNECTING CARRIERS

OTHER PARTICIPATING CARRIERS

NO OTHER PARTICIPATING CARRIERS

REGISTERED SERVICE MARKS

NONE

REGISTERED TRADEMARKS

NONE

ACCESS SERVICE

EXPLANATION OF SYMBOLS

C	- to signify changed regulation.
D	- to signify discontinued rate or regulation.
I	- to signify increase to a rate or charge.
M	- to signify matter relocated without change.
N	- to signify new rate or regulation.
R	- to signify reduction to a rate or charge.
S	- to signify matter reissued without change.
T	- to signify a change in text but no change in rate or regulation.
Z	- to signify a correction.

EXPLANATION OF ABBREVIATIONS

ADA	- Abbreviated Dialing Arrangement	
ADM	- Add/Drop Multiplexing	(N)
ADSL	- Asymmetric Digital Subscriber Line	(N)
AML	- Actual Measured Loss	
ANI	- Automatic Number Identification	
AP	- Program Audio	
AT&T	- American Telephone and Telegraph Company	
ATM	- Asynchronous Transfer Mode	(N)
ATM-CRS	- Synchronous Transfer Mode Cell Relay Access Service	(N)
BHMC	- Busy Hour Minutes of Capacity	
CBR	- Constant Bit Rate	(N)
CDP	- Customer Designated Premises	
CCS	- Common Channel Signaling	(N)
CI	- Channel Interface	
CIR	- Committed Information Rate	(N)
CO	- Central Office	
Cont'd	- Continued	
CPE	- Customer Provided Equipment	
CPN	- Calling Party Number	(N)
CSP	- Carrier Selection Parameter	(N)
DA	- Directory Assistance	
dB	- decibel	
dBrnC	- Decibel Reference Noise C-Message Weighting	
dBrnCO	- Decibel Reference Noise C-Message Weighted O	
dc	- direct current	
DDD	- Direct Distance Dialing	
DSL	- Digital Subscriber Line	(N)
EAS	- Extended Area Service	
EDD	- Envelope Delay Distortion	
EML	- Expected Measured Loss	
EPL	- Echo Path Loss	
ERL	- Echo Return Loss	
ESS	- Electronic Switching System	
ESSX	- Electronic Switching System Exchange	
f	- frequency	
F.C.C.	- Federal Communications Commission	

ACCESS SERVICE

EXPLANATION OF ABBREVIATIONS (Cont'd)

FRAS	- Frame Relay Access Service	(N)
HC	- High Capacity	
Hz	- Hertz	
C	- Interexchange Carrier	
ICB	- Individual Case Basis	
ICL	- Inserted Connection Loss	
ISDN BRI	- Integrated Services Digital Network Basic Rate Interface	(N)
ISDN PRI	- Integrated Services Digital Network Primary Rate Interface	(N)
kbps	- kilobits per second	
kHz	- kilohertz	
LAN	- Local Area Network	
LATA	- Local Access and Transport Area	
LNP	- Local Number Portability	(N)
LRN	- Location Routing Number	(N)
ma	- milliamperes	
Mbps	- Megabits per second	
mcs	- Microsecond	
MHz	- Megahertz	
MRC	- Monthly Recurring Charge	
MT	- Metallic	
MTS	- Message Telecommunications Service(s)	
NNI	- Network to Network Interface	(N)
MTSO	- Mobile Telephone Switching Office	
NPA	- Numbering Plan Area	
NRC	- Nonrecurring Charge	
NXX	- Three-Digit Central Office Prefix	
OC	- Optical Carrier	(N)
OLT	- Optical Line Termination	(N)
PBX	- Private Branch Exchange	
PIC	- Presubscribed Interexchange Carrier	
POT	- Point of Termination	
PVC	- Permanent Virtual Connection	
SAC	- Service Access Code	
SDSL	- Symmetric Digital Subscriber Line	(N)
SNAL	- Signaling Network Access Line	(N)
SONET	- Synchronous Optical Network	(N)
SP	- Signaling Point	(N)
SPOI	- Signaling Point of Interface	(N)
SRL	- Singing Return Loss	
SSP	- Service Switching Point	(N)
SS7	- Signaling System 7	(N)
STP	- Signal Transfer point	(N)
STS	- Synchronous Transport Signal	(N)
SWC	- Serving Wire Center	
TG	- Telegraph Grade	

Certain material formerly found on this page now appears on Original Page 0-27.1.

ACCESS SERVICE

EXPLANATION OF ABBREVIATIONS (Cont'd)

TLP	- Transmission Level Point	(M)
TV	- Television	(M)
UBR	- Unspecified Bit Rate	(N)
UNI	- User Network Interface	(N)
V & H	- Vertical & Horizontal	(M)
VBR-nrt	- Variable Bit Rate – Non-real time	(N)
VBR-rt	- Variable Bit Rate – Real Time	(N)
VCC	- Virtual Circuit Channel	(N)
VG	- Voice Grade	(M)
VP	- Virtual Path	(N)
WATS	- Wide Area Telecommunications Service(s)	(M)
WSO	- WATS Serving Office	(M)

Material currently found on this page formerly appeared on Original Page 0-27.

ACCESS SERVICE

REFERENCE TO OTHER TARIFFS

Whenever reference is made in this tariff to other tariffs of the Telephone Company, the reference is to the tariffs in force as of the effective date of this tariff, and to amendments thereto and successive issues thereof.

The following tariffs are referenced in this tariff and may be obtained from the Federal Communications Commission's commercial contractor:

National Exchange Carrier Association, Inc. Special Construction Tariff F.C.C. No. 3	National Exchange Carrier Association, Inc. Wire Center Information Tariff F.C.C. No. 4	National Exchange Carrier Association, Inc. Tariff F.C.C. No. 5

REFERENCE TO TECHNICAL PUBLICATIONS

The following technical publications are referenced in this tariff and may be obtained from Telcordia Technologies Inc. (formerly Bell Communications Research, Inc. (Bellcore), Direct Sales, 8 Corporate Place, Piscataway, NJ 08854-4156.

Technical Reference:

GR-253-CORE Issue 2 Synchronous Optical Network (SONET) (N)
Transport Systems: Common Generic Criteria
Issued: December 1995

GR-1374-CORE Issue 1 SONET Inter-Carrier Interface Physical Layer Generic Criteria for Carriers
Issued: December 1994 (N)

PUB 41004 (MDP-326-584) Data Communications Using Voiceband Private Line Channels (T)
Issued: October 1973

PUB 62310 (MDP-326-726) Digital Data System Channel Interface Specification (T)
Issued: September 1983

(D)
(D)

TR-NPL-000258 Compatibility Information for Feature Group D Switched Access Service
Issued: October 1985

(T)

GR-334-CORE Issue 1 Switched Access Service - Transmission Parameter Limits and Interface Combinations (T)
Issued: June 1994

Certain material formerly found on this page now appears on Original Page 0-32.

ACCESS SERVICE

REFERENCE TO TECHNICAL PUBLICATIONS (Cont'd)

TR-NWT-000335, Issue 3 Voice Grade Special Access Service - Transmission Parameter Limits and Interface Combinations (T)
Issued: May 1993 (T)

TR-NPL-000336 Metallic and Telegraph Grade Special Access Service - Transmission Parameter Limits and Interface Combinations
Issued: October 1987

GR-337-CORE, Issue 1 Program Audio Special Access Service and Local Channel Services (T)
Issued: December 1995 (T)

GR-338-CORE, Issue 1 Television Special Access and Local Channel Services - Transmission Parameter Limits and Interface Combinations (T)
Issued: December 1995 (T)

TR-NWT-000341 Digital Data Special Access Service - Transmission Parameter and Interface Combinations (T)
Issued: Issue 2, February 1993 (T)

GR-342-CORE, Issue 1 High Capacity Digital Special Access Service - Transmission Parameter Limits and Interface Combinations (T)
Issued: December 1995 (T)

SR-307 Common Language NC/NCI Dictionary (T)
Issued: Issue 1, July 2002 (T)

GR-506-CORE, Issue LATA Switching Systems Generic Requirements (LSSGR) (T)
Issued: June 1996 (T)

GR-54-CORE, Issue 1 DS1 High Capacity Digital Service (N)
End User Metallic Interface Specifications
Issued: December 1995

GR-905-CORE, Issue 5 Common Channel Signaling Network Interface Specification
Available: December 2001

TR-TSV-001370 Generic Requirements for Exchange Access Frame Relay PVC Service
Issued: Issue 1, May 1993

GR-394-CORE Issue 2 Switching System Generic Requirements for Interexchange Carrier Interconnection Using the Integrated Services Digital Network User Part (ISDNUP)
Issued: November 1998

GR-2936-CORE Issue 3 Local Number Portability (LNP) Capability Specification (N)
Service Provider Portability
Issued: November 1997 (D)
(D)

Certain material formerly found on this page now appears on 1st Revised Page 0-30.

ACCESS SERVICE

REFERENCE TO TECHNICAL PUBLICATIONS (Cont'd)

Telecommunications Transmission Engineering (M)
Volume 3 - Networks and Services (Chapters 6 and 7)
Third Edition, 1980 (T)
Issued: August 1989 (T)

The following technical publication is referenced in this tariff and may be obtained from the National Exchange Carrier Association, Inc., Director - Tariff and Regulatory Matters, 80 So. Jefferson Road, Whippany, NJ 07981 and the Federal Communications Commission's commercial contractor. (T)

PUB AS No. 1, Issue II Access Service
Issued: May, 1984
Addendum: March 1987 (M)

The following publications are referenced in this tariff and may be obtained from the Government Printing Office, Superintendent of Documents, Document Control Branch, 941 N. Capital St., N.E., Washington, D.C. 20401.

Telecommunications Service Priority (TSP) System for National Security Emergency Preparedness (NSEP) Service Vendor Handbook, National Communications System (NCSH 3-1-2).

Issued July, 1990
Available August, 1990

Telecommunication Service Priority (TSP) System for National Security Emergency Preparedness (NSEP) Service User Manual, National Communications System (NCSM 3-1-1).

Issued July, 1990
Available August, 1990

ACCESS SERVICE

REFERENCE TO TECHNICAL PUBLICATIONS (Cont'd)

The following publication is referenced in this tariff and may be obtained from Director-Sales Operations, Integrated Network Corporation, P.O. Box 6875, Bridgewater, NJ 08807. (N)

Integrated Network Corporation
Document CB-INC-100
Available: June 1990

The following technical publications are referenced in this tariff and may be obtained from American National Standards Institute, 1430 Broadway, New York, New York 10018.

ANSI T1.102-1993, Digital Hierarchy - Electrical Interfaces.

ANSI T1.105-1995, Synchronous Optical Network (SONET) – Basic Description including Multiplex Structure, Rates and Formats.

ANSI T1.602-1996, Integrated Services Digital Network (ISDN) – Data-Link Layer Signaling Specification for Application at the User-Network Interface.

ANSI T1.606-1990, Integrated Services Digital Network (ISDN) - Architectural Framework and Service Description for Frame-Relaying Bearer Service.

ANSI T1.606a-1992, Supplement to ANSI T1.606-1990 Integrated Services Digital Network (ISDN) - Architectural Framework and Service Description for Frame-Relaying Bearer Service (Congestion Management and Frame Size).

ANSI T1.617-1991, Integrated Services Digital Network (ISDN) - Signaling Specification for Frame Relay Bearer Service for Digital Subscriber Signaling System Number 1 (DSS1).

ANSI T1.617a-1994, Integrated Services Digital Network (ISDN) - Signaling Specification for Frame Relay Bearer Service for Digital Subscriber Signaling System Number 1 (DSS1) Protocol Encapsulation and PICS).

ANSI T1.618-1991, Integrated Services Digital Network (ISDN) - Core Aspects of Frame Protocol for Use with Frame Relay Bearer Service.

ANSI T1.413-1998, Network and Customer Installation Interfaces - Asymmetric Digital Subscriber Line (ADSL) Metallic Interface. (N)

ACCESS SERVICE

REFERENCE TO TECHNICAL PUBLICATIONS (Cont'd)

The following technical publication is referenced in this tariff and may be obtained from the Institute of Electrical and Electronics Engineers, Inc. (IEEE), 445 Hoes Lane, P. O. Box 1331, Piscataway, NJ 08855-1331 (www.ieee.org).

IEEE Std. 802.3 - 2000, Part 3, Clauses 14, 15, 21, 26, 29, and 34 through 38 - Information Technology – Telecommunications and Information Exchange Between Systems – Local and Metropolitan Area Networks – Specific Requirements

The following technical publications are referenced in this tariff and may be obtained from the Alliance for Telecommunications Industry Solutions (ATIS), 1200 G Street N.W., Suite 500, Washington, DC 20005 (www.atis.org).

Multiple Exchange Carrier Access Billing (MECAB) Guidelines
Issued: January, 2003

Multiple Exchange Carrier Ordering and Design (MECOD) Guidelines
Issued: February 2002

The following technical publications are referenced in this tariff and may be obtained from The ATM Forum, Presidio of San Francisco, P.O. Box 29920, 572B Ruger Street, San Francisco, CA 94129-0920 (www.atmforum.com).

The ATM Forum Technical Committee, ATM User-Network Interface (UNI) Signalling Specification, Version 4.0, af-sig-0061.000, July, 1996.

The ATM Forum Technical Committee, BISDN Inter Carrier Interface (B-ICI) Specification, Version 2.0 (Integrated), af-bici-0013.003, December, 1995.

The ATM Forum Technical Committee, Private Network – Network Interface Specification, Version 1.0 (PNNI 1.0) af-pnni-0055.000, March, 1996.

The following technical publications are referenced in this tariff and may be viewed online without charge on the Internet Engineering Task Force web site (www.ietf.org) using the "RFC Pages" link. (N)

Request For Comments (RFC) 791, Internet Protocol, DARPA Internet Program Protocol Specification, September 1981.

Request For Comments (RFC) 1483, Multiprotocol Encapsulation over ATM Adaptation Layer 5, July 1993. (N)

ACCESS SERVICE

1. Application of Tariff

1.1 This tariff contains regulations, rates and charges applicable to the provision of Carrier Common Line, End User Access, Switched Access, Special Access, Lifeline Assistance, Universal Service Fund and other miscellaneous services, hereinafter referred to collectively as service(s). These services are provided to customers by the Issuing Carriers of this tariff, hereinafter the Telephone Company. This tariff also contains Access Ordering regulations and charges that are applicable when these services are ordered or modified by the customer. (D) (D)

1.2 The provision of such services by the Telephone Company as set forth in this tariff does not constitute a joint undertaking with the customer for the furnishing of any service. (D) (D)

ACCESS SERVICE

2. General Regulations

2.1 Undertaking of the Telephone Company

2.1.1 Scope

(A) The Telephone Company does not undertake to transmit messages under this tariff.

(B) The Telephone Company shall be responsible only for the installation, operation and maintenance of the services it provides.

(C) The Telephone Company will, for maintenance purposes, test its service only to the extent necessary to detect and/or clear troubles.

(D) Services are provided 24 hours daily, seven days per week, except as set forth in other applicable sections of this tariff.

(E) The Telephone Company does not warrant that its facilities and services meet standards other than those set forth in this tariff.

(F) The Telephone Company provides only those services that are contained in this tariff that the Telephone Company is technically capable of providing.

2.1.2 Limitations

(A) Assignment or Transfer of Services

The customer may assign or transfer the use of services provided under this tariff only where there is no interruption of use or relocation of the services. Such assignment or transfer may be made to:

(1) another customer, whether an individual, partnership, association or corporation, provided the assignee or transferee assumes all outstanding indebtedness for such services, and the unexpired portion of the minimum period and the termination liability applicable to such services, if any; or

ACCESS SERVICE

2. General Regulations (Cont'd)

2.1 Undertaking of the Telephone Company (Cont'd)

2.1.2 Limitations (Cont'd)

(A) Assignment or Transfer of Services (Cont'd)

(2) a court-appointed receiver, trustee or other person acting pursuant to law in bankruptcy, receivership, reorganization, insolvency, liquidation or other similar proceedings, provided the assignee or transferee assumes the unexpired portion of the minimum period and the termination liability applicable to such services, if any.

In all cases of assignment or transfer, the written acknowledgement of the Telephone Company is required prior to such assignment or transfer. This acknowledgement shall be made within 15 days from the receipt of notification. All regulations and conditions contained in this tariff shall apply to such assignee or transferee.

The assignment or transfer of services does not relieve or discharge the assignor or transferor from remaining jointly or severally liable with the assignee or transferee for any obligations existing at the time of the assignment or transfer.

(B) Use and Restoration of Services

The use and restoration of services shall be in accordance with Part 64, Subpart D, Appendix A, of the Federal Communications Commission's Rules and Regulations, which specifies the priority system for such activities. (x) | (x)

(x) Filed under authority of Special Permission No. 93-598 of the Federal Communications Commission.

ACCESS SERVICE

2. General Regulations (Cont'd)

2.1 Undertaking of the Telephone Company (Cont'd)

2.1.2 Limitations (Cont'd)

(C) Sequence of Provisioning

Subject to compliance with the rules mentioned in (B) preceding, the services offered herein will be provided to customers on a first-come, first-served basis.

The first-come, first-served sequence shall be based upon the received time and date recorded, by stamp or other notation, by the Telephone Company on customer access orders. These orders must contain all the information as required for each respective service as delineated in other sections of this tariff. Customer orders shall not be deemed to have been received until such information is provided. Should questions arise which preclude order issuance due to missing information or the need for clarification, the Telephone Company will attempt to seek such missing information or clarification on a verbal basis.

2.1.3 Liability

(A) Limits of Liability

The Telephone Company's liability, if any, for its willful misconduct is not limited by this tariff. With respect to any other claim or suit, by a customer or by any others, for damages associated with the installation, provision, termination, maintenance, repair or restoration of service, and subject to the provisions of (B) through (G) following, the Telephone Company's liability if any, shall not exceed an amount equal to the proportionate charge for the service for the period during which the service was affected. This liability for damages shall be in addition to any amounts that may otherwise be due the customer under this tariff as a Credit Allowance for a Service Interruption.

ACCESS SERVICE

2. General Regulations (Cont'd)

2.1 Undertaking of the Telephone Company (Cont'd)

2.1.3 Liability (Cont'd)

(B) Acts or Omissions

The Telephone Company shall not be liable for any act or omission of any other carrier or customer providing a portion of a service, nor shall the Telephone Company for its own act or omission hold liable any other carrier or customer providing a portion of a service.

(C) Damages to Customer Premises

The Telephone Company is not liable for damages to the customer premises resulting from the furnishing of a service, including the installation and removal of equipment and associated wiring, unless the damage is caused by the Telephone Company's negligence.

(D) Indemnification of Telephone Company

(1) By the End User

The Telephone Company shall be indemnified, defended and held harmless by the end user against any claim, loss or damage arising from the end user's use of services offered under this tariff, involving:

(A) Claims for libel, slander, invasion of privacy, or infringement of copyright arising from the end user's own communications;

ACCESS SERVICE

2. General Regulations (Cont'd)

2.1 Undertaking of the Telephone Company (Cont'd)

2.1.3 Liability (Cont'd)

(D) Indemnification of Telephone Company (Cont'd)

(1) By the End User (Cont'd)

(B) Claims for patent infringement arising from the end user's acts combining or using the service furnished by the Telephone Company in connection with facilities or equipment furnished by the end users or customer; or

(C) All other claims arising out of any act or omission of the end user in the course of using services provided pursuant to this tariff.

(2) By the Customer

The Telephone Company shall be indemnified, defended and held harmless by the customer against any claim, loss or damage arising from the customer's use of services offered under this tariff, involving:

(A) Claims for libel, slander, invasion of privacy, or infringement of copyright arising from the customer's own communications;

(B) Claims for patent infringement arising from the customer's acts combining or using the service furnished by the Telephone Company in connection with facilities or equipment furnished by the end user or customer; or

(C) All other claims arising out of any act or omission of the customer in the course of using services provided pursuant to this tariff.

ACCESS SERVICE

2. General Regulations (Cont'd)

2.1 Undertaking of the Telephone Company (Cont'd)

2.1.3 Liability (Cont'd)

(E) Explosive Atmospheres

The Telephone Company does not guarantee or make any warranty with respect to its services when used in an explosive atmosphere. The Telephone Company shall be indemnified, defended and held harmless by the customer from any and all claims by any person relating to such customer's use of services so provided.

(F) No License Granted

No license under patents (other than the limited license to use) is granted by the Telephone Company or shall be implied or arise by estoppel, with respect to any service offered under this tariff. The Telephone Company will defend the customer against claims of patent infringement arising solely from the use by the customer of services offered under this tariff and will indemnify such customer for any damages awarded based solely on such claims.

(G) Circumstances Beyond the Telephone Company's Control

The Telephone Company's failure to provide or maintain services under this tariff shall be excused by labor difficulties, governmental orders, civil commotions, criminal actions taken against the Telephone Company, acts of God and other circumstances beyond the Telephone Company's reasonable control, subject to the Credit Allowance for a Service Interruption as set forth in 2.4.4 following.

ACCESS SERVICE

2. General Regulations (Cont'd)

2.1 Undertaking of the Telephone Company (Cont'd)

2.1.4 Provision of Services

The Telephone Company will provide to the customer, upon reasonable notice, services offered in other applicable sections of this tariff at rates and charges specified therein. Services will be made available to the extent that such services are or can be made available with reasonable effort, and after provision has been made for the Telephone Company's telephone exchange services.

2.1.5 Facility Terminations

The services provided under this tariff will include any entrance cable or drop wiring and wire or intrabuilding cable to that point where provision is made for termination of the Telephone Company's outside distribution network facilities at a suitable location inside a customer-designated premises. Such wiring or cable will be installed by the Telephone Company to the Point of Termination. Moves of the Point of Termination at the customer designated premises will be as set forth in 6.4.4 and 7.2.3 following.

2.1.6 Service Maintenance

The services provided under this tariff shall be maintained by the Telephone Company. The customer or others may not rearrange, move, disconnect, remove or attempt to repair any facilities provided by the Telephone Company, other than by connection or disconnection to any interface means used, except with the written consent of the Telephone Company.

ACCESS SERVICE

2. General Regulations (Cont'd)

2.1 Undertaking of the Telephone Company (Cont'd)

2.1.7 Changes and Substitutions

Except as provided for equipment and systems subject toFCC Part 68 Regulations at 47 C.F.R. Section 68.110(b), the Telephone Company may, where such action is reasonably required in the operation of its business, substitute, change or rearrange any facilities used in providing service under this tariff. Such actions may include, without limitation:

- substitution of different metallic facilities,
- substitution of carrier or derived facilities for metallic facilities used to provide other than metallic facilities,

(D)
|
(D)

- change of minimum protection criteria,
- change of operating or maintenance characteristics of facilities, or
- change of operations or procedures of the Telephone Company.

In case of any such substitution, change or rearrangement, the transmission parameters will be within the range as set forth in Section 15. following. The Telephone Company shall not be responsible if any such substitution, change or rearrangement renders any customer furnished services obsolete or requires modification or alteration thereof or otherwise affects their use or performance. If such substitution, change or rearrangement materially affects the operating characteristics of the facility, the Telephone Company will provide reasonable notification to the customer in writing. Reasonable time will be allowed for any redesign and implementation required by the change in operating characteristics. The Telephone Company will work cooperatively with the customer to determine reasonable notification procedures.

ACCESS SERVICE

2. General Regulations (Cont'd)

2.1 Undertaking of the Telephone Company (Cont'd)

2.1.8 Refusal and Discontinuance of Service

(A) If a customer fails to comply with 2.1.6 preceding (Service Maintenance) or Sections 2.3.1, 2.3.4, 2.3.6, 2.3.11, 2.4.1 or 2.5, following (respectively, Damages, Availability for Testing, Balance, Jurisdictional Report and Certification Requirements, Payment of Rates, Charges or Deposits; or Connections), including any customer's failure to make payments on the date and times therein specified, the Telephone Company may, on thirty (30) calendar days written notice by Certified U.S. Mail, or overnight delivery to the person designated by that customer to receive such notices of noncompliance, take the following actions: (C) | (C) (T) (T) (C) (C) | (C)

- refuse additional applications for service and/or refuse to complete any pending orders for service, and/or

- discontinue the provision of service to the customer.

In the case of discontinuance all applicable charges, including termination charges, shall become due.

Certain material formerly found on this page can now be found on Original Page 2-9.2

ACCESS SERVICE

2. General Regulations (Cont'd)

2.1 Undertaking of the Telephone Company (Cont'd)

2.1.8 Refusal and Discontinuance of Service (Cont'd)

(B) In addition to and not in limitation of the provisions in (A), above, if a customer fails to comply with Section 2.4.1, following (Payment of Rates, Charges and Deposits), including any payments to be made by it on the dates and times therein specified, the Telephone Company may take the actions specified in (A), above, with regard to services provided hereunder to that customer on fifteen (15) calendar days written notice to the person designated by that customer to receive such notices of noncompliance, such notice period to start the day after the notice is sent by overnight delivery, if the customer has not complied with respect to amounts due in a subject bill on subject deposit request and either: (N)

(1) the Telephone Company has sent the subject bill to the customer within seven (7) business days of the bill date; or
(2) the Telephone Company has sent the subject bill to the customer more than thirty (30) calendar days before notice under this section is given; or
(3) the Telephone Company has sent the subject deposit request to the customer more than fifteen (15) business days before notice under this section is given.

In all other cases, the Telephone Company will give thirty (30) calendar days written notice pursuant to (A), above. The Telephone Company will maintain records sufficient to validate the date upon which a bill or deposit request was sent to the customer. Action specified in (A), above, will not be taken with regard to the subject bill or subject deposit request if the customer cures the noncompliance prior to the expiration of the fifteen (15) or thirty (30) days notice period, as applicable.

(C) If notice is given by overnight delivery under (A) or (B), above, it shall be performed by a reputable overnight delivery service such as, or comparable to, the U.S. Postal Service Express Mail, United Parcel Service, or Federal Express. (N)

ACCESS SERVICE

2. General Regulations (Cont'd)

2.1 Undertaking of the Telephone Company (Cont'd)

2.1.8 Refusal and Discontinuance of Service (Cont'd)

(D) The provisions in (A) and (B), above, shall not apply to charges that a customer does not pay based on the submission of a good faith dispute pursuant to Section 2.4.1(D), following (Billing Disputes). (N) (N)

(E) If a customer fails to comply with 2.2.2, following (Unlawful and Abusive Use), the Telephone Company may, upon written request from a customer, or another exchange carrier, terminate service to any subscriber or customer identified as having utilized service provided under this tariff in the completion of abusive or unlawful telephone calls. Service shall be terminated by the Telephone Company as provided for in its general and/or local exchange service tariffs. (T) (M)

In such instances when termination occurs the Telephone Company shall be indemnified, defended and held harmless by any customer or Exchange Carrier requesting termination of service against any claim, loss or damage arising from the Telephone Company's actions in terminating such service, unless caused by the Telephone Company's negligence. (M)

Certain material currently found on this page formerly appeared on Original Page 2-9.

ACCESS SERVICE

2. General Regulations (Cont'd)

2.1 Undertaking of the Telephone Company (Cont'd)

2.1.8 Refusal and Discontinuance of Service (Cont'd)

(F) Except as provided for equipment or systems subject to the FCC Part 68 Rules in 47 C.F.R. Section 68.108, if the customer fails to comply with 2.2.1 following (Interference or Impairment), the Telephone Company will, where practicable, notify the customer that temporary discontinuance of the use of a service may be required; however, where prior notice is not practicable, the Telephone Company may temporarily discontinue service forthwith if such action is reasonable in the circumstances. In case of such temporary discontinuance, the customer will be notified promptly and afforded the opportunity to correct the condition which gave rise to the temporary discontinuance. During such period of temporary discontinuance, credit allowance for service interruptions as set forth in 2.4.4, following, is not applicable. (T) (T) (T)

(G) When access service is provided by more than one Telephone Company, the companies involved in providing the joint service may individually or collectively deny service to a customer for nonpayment. Where the Telephone Company(s) affected by the nonpayment is incapable of effecting discontinuance of service without cooperation from the other joint providers of Switched Access Service, such other Telephone Company(s) will, if technically feasible, assist in denying the joint service to the customer. Service denial for such joint service will only include calls originating or terminating within, or transiting, the operating territory of the Telephone Companies initiating the service denial for nonpayment. When more than one of the joint providers must deny service to effectuate termination for nonpayment, in cases where a conflict exists in the applicable tariff provisions, the tariff regulations of the end office Telephone Company shall apply for joint service discontinuance. (T)

ACCESS SERVICE

2. General Regulations (Cont'd)

2.1 Undertaking of the Telephone Company (Cont'd)

2.1.8 Refusal and Discontinuance of Service (Cont'd)

(H) If the Telephone Company does not refuse additional applications for service and/or does not discontinue the provision of the services as specified for herein, and the customer's noncompliance continues, nothing contained herein shall preclude the Telephone Company's right to refuse additional applications for service and/or to discontinue the provision of the services to the non-complying customer without further notice. (T)

(I) If the National Exchange Carrier Association, Inc., notifies the Telephone Company that the Customer has failed to comply with Section 3.9 herein (Federal Universal Service Charge), including any Customer's failure to make payments on the date and times specified therein, the Telephone Company may, on thirty calendar days' written notice to the Customer by Certified U.S. Mail, or overnight delivery to the person designated by that customer to receive such notices of noncompliance, take any of the following actions: (T) (T) (C) (C) (C)

- refuse additional applications for service
- refuse to complete any pending orders for service
- discontinue the provision of service to the Customer.

In the case of discontinuance, all applicable charges including termination charges shall become due.

ACCESS SERVICE

2. General Regulations (Cont'd)

2.1 Undertaking of the Telephone Company (Cont'd)

2.1.9 Notification of Service-Affecting Activities

The Telephone Company will provide the customer reasonable notification of service-affecting activities that may occur in the normal operation of its business. Such activities may include, but are not limited to the following:

- equipment or facilities additions;
- removals or rearrangements;
- routine preventative maintenance; and
- major switching machine change-out.

Generally, such activities are not individual customer service specific, but may affect many customer services. No specific advance notification period is applicable to all service activities. The Telephone Company will work cooperatively with the customer to determine reasonable notification requirements.

2.1.10 Coordination with Respect to Network Contingencies

The Telephone Company intends to work cooperatively with the customer to develop network contingency plans in order to maintain maximum network capability following natural or man-made disasters which affect telecommunications services.

2.1.11 Provision and Ownership of Telephone Numbers

The Telephone Company reserves the reasonable right to assign, designate or change telephone numbers, any other call number designations associated with Access Services, or the Telephone Company serving central office prefixes associated with such numbers, when necessary in the conduct of its business. Should it become necessary to make a change in such number(s), the Telephone Company will furnish to the customer six (6) months' notice, by Certified U.S. Mail, of the effective date and an explanation of the reason(s) for such change(s).

ACCESS SERVICE

General Regulations (Cont'd)

2.2 Use

2.2.1 Interference or Impairment

The characteristics and methods of operation of any circuits, facilities or equipment provided by other than the Telephone Company and associated with the facilities utilized to provide services under this tariff shall not:

- interfere with or impair service over any facilities of the Telephone Company, its affiliated companies, or its connecting and concurring carriers involved in its services;
- cause damage to their plant;
- impair the privacy of any communications carried over their facilities; or
- create hazards to the employees of any of them or the public.

2.2.2 Unlawful and Abusive Use

(A) The service provided under this tariff shall not be used for an unlawful purpose or used in an abusive manner.

Abusive use includes:

(1) The use of the service of the Telephone Company for a call or calls, anonymous or otherwise, in a manner reasonably expected to frighten, abuse, torment, or harass another;

(2) The use of the service in such a manner as to interfere unreasonably with the use of the service by one or more other customers.

ACCESS SERVICE

2. General Regulations (Cont'd)

2.3 Obligations of the Customer

2.3.1 Damages

The customer shall reimburse the Telephone Company for damages to Telephone Company facilities utilized to provide services under this tariff caused by the negligence or willful act of the customer or resulting from the customer's improper use of the Telephone Company facilities, or due to malfunction of any facilities or equipment provided by other than the Telephone Company. Nothing in the foregoing provision shall be interpreted to hold one customer liable for another customer's actions. The Telephone Company will, upon reimbursement for damages, cooperate with the customer in prosecuting a claim against the person causing such damage and the customer shall be subrogated to the right of recovery by the Telephone Company for the damages to the extent of such payment.

2.3.2 Ownership of Facilities and Theft

Facilities utilized by the Telephone Company to provide service under the provisions of this tariff shall remain the property of the Telephone Company. Such facilities shall be returned to the Telephone Company by the customer, whenever requested, within a reasonable period. The equipment shall be returned in as good condition as reasonable wear will permit.

ACCESS SERVICE

2. General Regulations (Cont'd)

2.3 Obligations of the Customer (Cont'd)

2.3.3 Equipment Space and Power

The customer shall furnish or arrange to have furnished to the Telephone Company, at no charge, equipment space and electrical power required by the Telephone Company to provide services under this tariff at the points of termination of such services. The selection of ac or dc power shall be mutually agreed to by the customer and the Telephone Company. The customer shall also make necessary arrangements in order that the Telephone Company will have access to such spaces at reasonable times for installing, testing, repairing or removing Telephone Company facilities used to provide services.

2.3.4 Availability for Testing

Access to facilities used to provide services under this tariff shall be available to the Telephone Company at times mutually agreed upon in order to permit the Telephone Company to make tests and adjustments appropriate for maintaining the services in satisfactory operating condition. Such tests and adjustments shall be completed within a reasonable time. As set forth in 2.4.4(C)(4) following, no credit will be allowed for any interruptions involved during such tests and adjustments.

2.3.5 Limitation of Use of Metallic Facilities

Signals applied to a metallic facility shall conform tothe limitations set forth in (x)
Technical Reference Publication AS No. 1. In the case of application of dc (x)
telegraph signaling systems, the customer shall beresponsible, at its expense, for the provision of current limiting devices to protect the Telephone Company facilities from excessive current due to abnormal conditions and for the provision of noise mitigation networks when required to reduce excessive noise.

(x) Filed under authority of Special Permission No. 93-598 of the Federal Communications Commission.

ACCESS SERVICE

2. General Regulations (Cont'd)

2.3 Obligations of the Customer (Cont'd)

2.3.6 Balance

All signals for transmission over the facilities used to provide services under this tariff shall be delivered by the customer balanced to ground except for ground start, duplex (DX) and McCulloch-Loop (Alarm System) type signaling and dc telegraph transmission at speeds of 75 baud or less.

2.3.7 Design of Customer Services

Subject to the provisions of 2.1.7 preceding (Changes and Substitutions), the customer shall be solely responsible, at its own expense, for the overall design of its services and for any redesigning or rearrangement of its services which may be required because of changes in facilities, operations or procedures of the Telephone Company, minimum protection criteria or operating or maintenance characteristics of the facilities.

2.3.8 References to the Telephone Company

The customer may advise end users that certain services are provided by the Telephone Company in connection with the service the customer furnishes to end users; however, the customer shall not represent that the Telephone Company jointly participates in the customer's services.

ACCESS SERVICE

2. General Regulations (Cont'd)

2.3 Obligations of the Customer (Cont'd)

2.3.9 Claims and Demands for Damages

(A) With respect to claims of patent infringement made by third persons, the customer shall defend, indemnify, protect and save harmless the Telephone Company from and against all claims arising out of the combining with, or use in connection with, the services provided under this tariff, any circuit, apparatus, system or method provided by the customer.

(B) The customer shall defend, indemnify and save harmless the Telephone Company from and against any suits, claims, losses and damages, including punitive damages, attorney fees and court costs by third persons arising out of the construction, installation, operation, maintenance, or removal of the customer's circuits, facilities, or equipment connected to the Telephone Company's services provided under this tariff including, without limitation, Worker's Compensation claims, actions for infringement of copyright and/or unauthorized use of program material, libel and slander actions based on the content of communications transmitted over the customer's circuits, facilities or equipment, and proceedings to recover taxes, fines, or penalties for failure of the customer to obtain or maintain in effect any necessary certificates, permits, licenses, or other authority to acquire or operate the services provided under this tariff; provided, however, the foregoing indemnification shall not apply to suits, claims, and demands to recover damages for damage to property, death, or personal injury unless such suits, claims or demands are based on the tortious conduct of the customer, its officers, agents or employees.

(C) The customer shall defend, indemnify and save harmless the Telephone Company from and against any suits, claims, losses or damages, including punitive damages, attorney fees and court costs by the customer or third parties arising out of any act of omission of the customer in the course of using services provided under this tariff.

ACCESS SERVICE

2. General Regulations (Cont'd)

2.3 Obligations of the Customer (Cont'd)

2.3.10 Coordination with Respect to Network Contingencies

The customer shall, in cooperation with the Telephone Company, coordinate in planning the actions to be taken to maintain maximum network capability following natural or man-made disasters which affect telecommunications services.

2.3.11 Jurisdictional Report and Certification Requirements

(A) Certification Requirements - Special Access

When the customer orders Special Access Service, and the customer certifies to the Telephone Company in writing that more than ten percent of the traffic is interstate, the service is considered to be interstate and is provided under this Tariff.

For those customers who were provided Special Access Service under this tariff prior to May 15, 1990, or who have pending Special Access Service orders as of May 15, 1990, the Telephone Company will by July 15, 1990, request the customer to certify their existing Special Access Service and advise the telephone company in writing of any jurisdictional change. The customer will be requested to reply to the Telephone Company within 90 days. When a Special Access Service is certified to be jurisdictionally changed, the effective date of the change will be the date the Telephone Company receives the customer's certification. There is no charge when the customer's reply results in a jurisdictional change in the Special Access Service.

Following initial certification, should the jurisdictional nature of the customer's Special Access Service change, the customer should inform the Telephone Company in writing of the change. The effective date of the change will be the date the Telephone Company receives the customer's notice of change. No charge applies for the jurisdictional change.

ACCESS SERVICE

2. General Regulations (Cont'd)

2.3 Obligations of the Customer (Cont'd)

2.3.11 Jurisdictional Report and Certification Requirements (Cont'd)

(B) Disputes Involving Jurisdictional Certification - Special Access and Public Packet Data Network (T) (T)

If a dispute arises concerning the certification of projected interstate traffic as described in (A) above, the Telephone Company will ask the customer to provide the data the customer used to determine that more than 10% of the traffic is interstate. The customer shall supply the data within thirty (30) days of the Telephone Company request. If the reply results in a jurisdictional change of a Special Access Service or Public Packet Data Network Service, the effective date of the change will be the date the Telephone Company receives the customer's reply. There is no charge when the customer's reply results in a jurisdictional change in the Special Access Service or Public Packet Data Network Service. (T) (T)

(C) Jurisdictional Reports - Switched Access

For Switched Access Service, the Telephone Company cannot in all cases determine the jurisdictional nature of customer traffic and its related access minutes. In such cases the customer may be called upon to provide a projected estimate of its traffic, split between the interstate and intrastate jurisdictions. For purposes of determining the jurisdiction of Switched Access Services, the regulations set forth in (1) through (4), below, apply. (C) (C)

(D) (D)

ACCESS SERVICE

2. General Regulations (Cont'd) (N)

2.3 Obligations of the Customer (Cont'd)

2.3.11 Jurisdictional Report and Certification Requirements (Cont'd)

(C) Jurisdictional Reports - Switched Access (Cont'd)

(1) Percentage of Interstate Use (PIU)

(a) For purposes of developing the projected interstate percentage for Feature Group C or Feature Group D, the customer shall consider every call that originates from a calling party in one state and terminates to a called party in a different state to be interstate communications. The customer shall consider every call that terminates to a called party within the same state as the state where the calling party is located to be intrastate communications. The manner in which a call is routed through the telecommunications network does not affect the jurisdiction of a call, i.e., a call between two points within the same state is an intrastate call even if it is routed through another state. (N)

For purposes of developing the projected interstate percentage for Feature Group A or Feature Group B, pursuant to Federal Communications Commission Order FCC 85-145 released April 16, 1985, interstate usage is to be developed as though every call that enters a customer network at a point within the same state as that in which the called station (as designated by the called station telephone number) is situated is an intrastate communication and every call for which the point of entry is a state other than that where the called station (as designated by the called station telephone number) is situated, is an interstate communication. (C) (C) (T) (M) (M)

Certain material currently found on this page formerly appeared on 3rd Revised Page 2-21.

ACCESS SERVICE

2. General Regulations (Cont'd) (N)

2.3 Obligations of the Customer (Cont'd)

2.3.11 Jurisdictional Report and Certification Requirements (Cont'd)

(C) Jurisdictional Reports - Switched Access (Cont'd) (N)

(1) Percentage of Interstate Use (PIU)

(b) When the Telephone Company receives sufficient call detail to permit it to determine the jurisdiction of some or all originating and terminating access minutes of use, the Telephone Company will use that call detail to render bills for those minutes of use and will not use PIU factors(s) described in (2), below, to determine the jurisdiction of those minutes of use. (C)

When the Telephone Company receives insufficient call detail to determine the jurisdiction of some or all originating and terminating access minutes of use, the Telephone Company will apply the PIU factor(s) provided by the customer or developed by the Telephone Company as set forth in (2), below, only to those minutes of use for which the Telephone Company does not have sufficient call detail. Such PIU factor(s) will be used until the customer provides an update to its PIU factor(s) as set forth in (2) (g) or (h), below.

For all flat rated Switched Access Services, the Telephone Company will apply the PIU factor(s) as provided by the customer or developed by the Telephone Company as set forth in (2), below, each month until the customer provides an update to its PIU factor(s) as described in (2) (g) or (h), below. (C)

ACCESS SERVICE

2. General Regulations (Cont'd)

2.3 Obligations of the Customer (Cont'd)

2.3.11 Jurisdictional Report and Certification Requirements (Cont'd) (T)

(C) Jurisdictional Reports - Switched Access (Cont'd)

(2) Use of PIU Factors (T)

(a) As specified in Section 5.2.1, following, the customer will provide a projected PIU for each Switched Access Service for each end office when placing its order. Such PIU factors are applied to all usage rated elements (including but not limited to Information Surcharge, Local Switching, and Tandem Switched Transport), where the Telephone Company does not receive sufficient call detail to determine the jurisdiction of the usage. (C) (C) (M) (M) (C) (C)

If the customer fails to provide a PIU factor on its order for service, the following provisions apply. For originating access minutes, when the call detail is adequate to determine the appropriate jurisdiction and when the Feature Group C or Feature Group D access minutes of use are measured, the Telephone Company will develop PIU factor(s) on a monthly basis by end office by dividing the customer's measured interstate originating access minutes (the access minutes where the calling party is in one state and the called party is in another state) by the customer's total originating access minutes. For terminating access minutes, the same data used by the Telephone Company to develop the PIU factor for originating access minutes will be used to develop the PIU factor for such terminating access minutes. (C) (C) (M) (M) (C) (C) (M) (M) (C) (M) (C) (M) (M)

Certain material currently found on this page formerly appeared on 3rd Revised Page 2-21, 1st Revised Page 2-23 and 1st Revised Page 2-24.

Certain material formerly found on this page now appears on 2nd Revised Page 2-22 and Original Page 2-22.1.

ACCESS SERVICE

2. General Regulations (Cont'd) (N)

2.3 Obligations of the Customer (Cont'd)

2.3.11 Jurisdictional Report and Certification Requirements (Cont'd)

(C) Jurisdictional Reports - Switched Access (Cont'd)

(2) Use of PIU Factors (Cont'd) (N)

The Telephone Company developed PIU factor(s) described in this section will only be used for minutes of use for which the Telephone Company does not have sufficient call detail to determine the jurisdiction until such time as the customer provides updated PIU factor(s) for these services. (C) (C)

(b) Separate PIUs are required for flat rated Entrance Facilities, Direct Trunked Transport Facilities, and Switched Access Services Optional Features and Functions. The PIU factor(s) for use with such flat rated elements will reflect the combination of originating and terminating traffic of all services using such facilities. (M) (M) (C) (C)

If the customer fails to provide a PIU factor on its order for service, the Telephone Company will apply the PIU factor it developed pursuant to (2)(a), above, against the customer's flat rated Switched Access Services to apportion those changes between the jurisdictions. (N) (N)

Certain material currently found on this page formerly appeared on 3rd Revised Page 2-21.

ACCESS SERVICE

2. General Regulations (Cont'd)

2.3 Obligations of the Customer (Cont'd)

2.3.11 Jurisdictional Report and Certification Requirements (Cont'd) (T)

(C) Jurisdictional Reports - Switched Access (Cont'd)

(2) Use of PIU Factors (Cont'd) (T)

(c) When a customer orders Feature Group A or Feature Group B Switched Access Service, the customer shall, in its order, state the projected percentage for interstate usage for each Feature Group A or Feature Group B Switched Access Service group ordered. The term group shall be construed to mean single lines or trunks as well. For all groups the number of access minutes (either measured or assumed) for a group will be multiplied by the projected interstate percentage to develop the interstate access minutes. The number of access minutes for the group minus the developed interstate access minutes for the group will be developed intrastate access minutes. (T) (M) (M)

(d) When a customer orders Directory Assistance Service, the customer shall, in its order, provide the projected interstate percentage for terminating use. (T) (M) (C)

(e) When the customer has both interstate and intrastate Operator Services traffic, the percentage interstate usage determined for the customer's FGC or FGD service will be applied to the customer's Operator Services charges. (T) (M) (M)

Certain material currently found on this page formerly appeared on 1st Revised Page 2-22, 1st Revised Page 2-24, and 2nd Revised Page 2-25.

Certain material formerly found on this page now appears on Original Page 2-19.1, 2nd Revised Page 2-20, Original Page 2-20.1, and Original Page 22.1

ACCESS SERVICE

2. General Regulations (Cont'd)

2.3 Obligations of the Customer (Cont'd)

2.3.11 Jurisdictional Report and Certification Requirements (Cont'd) (T)

(C) Jurisdictional Reports - Switched Access (Cont'd)

(2) Use of PIU Factors (Cont'd) (T)

(f) For each service, the customer may only provide a PIU factor that is in a whole number format, i.e., a number from 0 to 100. When the customer provides the PIU factor, the Telephone Company will subtract the provided PIU from 100 and the difference is the percent intrastate usage. The sum of the interstate and intrastate percentages will equal 100 percent. The customer provided factors will be used by the Telephone Company as described in (1)(b), above, until the customer provides updated PIU factors as required in (2)(g) or (h), below. (N) (N)

(g) When the customer adds or discontinues Busy Hour Minutes of Capacity (BHMC) lines or trunks to an existing Switched Access Service group, the customer shall furnish a revised projected interstate percentage for the remaining BHMC, lines or trunks in the end office group. The revised report will serve as the basis for future billing, where applicable, and will be effective on the next bill date. No prorating or back billing will be done based on such revised report. (C) (C) (M) (M) (C) (M) (C)

Certain material currently found on this page formerly appeared on 1st Revised Page 2-20 and 3rd Revised Page 2-21.

Certain material formerly found on this page now appears on 4th Revised Page 2-21.

ACCESS SERVICE

2. General Regulations (Cont'd) (N)

2.3 Obligations of the Customer (Cont'd)

2.3.11 Jurisdictional Report and Certification Requirements (Cont'd)

(C) Jurisdictional Reports - Switched Access (Cont'd)

(2) Use of PIU Factors (Cont'd) (N)

(h) Effective on the first of January, April, July and October (T)
of each year, the customer shall update its interstate and (M) (C)
intrastate jurisdictional report. The customer shall
forward to the Telephone Company, to be received no
later than fifteen (15) days after the first of each such
month, a revised report showing the interstate and
intrastate percentage of use for the past three months
ending the last day of December, March, June and
September, respectively, for each service arranged for
interstate use. Such revised report will serve as the basis (M) (C)
for the next three month's billing for determining the (C)
jurisdiction for Switched Access Services in cases where
the Telephone Company does not have sufficient call
detail to do so and will be effective on the bill date for (C)
that service. No prorating or back billing will be done (M)
based on the revised report. (M)

If the customer does not supply the revised reports, the (M) (C)
Telephone Company will assume the percentages to be
the same as those provided in the last quarterly report.
For those cases in which a quarterly report has never
been received from the customer, the Telephone
Company will assume the percentages to be the same as
those provided in the customer's order for service or as (M)
developed by the Telephone Company as specified in (C)
(2)(a), above. (C)

Certain material currently found on this page formerly appeared on 1st Revised Page 2-20 and 3rd Revised Page 2-21.

ACCESS SERVICE

2. General Regulations (Cont'd)

2.3 Obligations of the Customer (Cont'd)

2.3.11 Jurisdictional Report and Certification Requirements (Cont'd) (T)

(C) Jurisdictional Reports - Switched Access (Cont'd)

(3) Maintenance of Customer Records (T)

(a) The customer shall retain for a minimum of six (6) months call detail records that substantiate the interstate percent provided to the Telephone Company as set forth in (2), above, for Switched Access Services. Such records shall consist of (i) and (ii), below, if applicable. (N)

(i) All call detail records such as work papers and/or backup documentation including paper, magnetic tapes or any other form of records for billed customer traffic, call information including call terminating address (i.e., called number), the call duration, all originating and terminating trunk groups or access lines over which the call is routed, and the point at which the call enters the customer's network and;

(ii) If the customer has a mechanized system in place that calculated the PIU, then a description of that system and the methodology used to calculate the PIU must be furnished and any other pertinent information (such as but not limited to flowcharts, source code, etc.) relating to such system must also be made available. (N)

Certain material formerly found on this page now appears on 2nd Revised Page 2-20

ACCESS SERVICE

2. General Regulations (Cont'd)

2.3 Obligations of the Customer (Cont'd)

2.3.11 Jurisdictional Report and Certification Requirements (Cont'd) (T)

(C) Jurisdictional Reports - Switched Access (Cont'd)

Certain material formerly found on this page now appears on 2nd Revised Page 2-20 and 4th Revised Page 2-21.

ACCESS SERVICE

2. General Regulations (Cont'd)

2.3 Obligations of the Customer (Cont'd)

2.3.11 Jurisdictional Report and Certification Requirements (Cont'd) (T)

(C) Jurisdictional Reports - Switched Access (Cont'd)

(4) Disputes Involving Jurisdictional Reports – Switched Access (T)

(a) If a billing dispute arises or if a regulatory commission questions the projected PIU factor(s) provided by the customer, the Telephone Company may, by written request, require the customer to provide the data the customer used to determine the projected PIU factor(s). This written request will be considered the initiation of the audit. The customer shall supply the data to an independent auditor or the Telephone Company within thirty (30) days of the Telephone Company request. The customer shall keep records of call detail from which the percentage of interstate and intrastate use can be ascertained as set forth in (3), above, and upon request of the Telephone Company make the records available for inspection at an agreed upon location during normal business hours as reasonably necessary for purposes of verification of the percentages. The Telephone Company will audit data from one quarter unless a longer period is requested by the customer and agreed to by the Telephone Company. (C) (C)

Certain material formerly found on this page now appears on 4th Revised Page 2-21 and Original Page 2-25.1

ACCESS SERVICE

2. General Regulations (Cont'd) (N)

2.3 Obligations of the Customer (Cont'd)

2.3.11 Jurisdictional Report and Certification Requirements (Cont'd)

(C) Jurisdictional Reports - Switched Access (Cont'd)

(4) Disputes Involving Jurisdictional Reports – Switched Access (Cont'd)

(b) If the customer does not provide the requested data to the Telephone Company or independent auditor within thirty (30) days of the notice of audit, the customer will be in violation of the Tariff and subject to the provisions specified in Section 2.1.8(A), preceding.

(c) Audits may be conducted by: (1) the Telephone Company when the customer agrees; (2) an independent auditor under contract to the Telephone Company; (3) a mutually agreed upon independent auditor paid for equally by the customer and the Telephone Company; or (4) an independent auditor selected and paid for by the customer. If the customer selects option (4), where it pays for its own independent audit, the selected auditor must certify that the audit was performed following Commission procedures for measuring interstate traffic as established by Commission Order, and provide the Telephone Company a report with supporting documentation to verify such procedures. (N)

(d) Verification audits may be conducted no more frequently than once per year except in extreme circumstances. The Telephone Company and customer will attempt to limit the audit to a reasonable time to effectively complete the audit. The Telephone Company and customer shall respond promptly to requests generated during the audit to ensure timely completion of the audit. (C) (C) (N) (N)

Certain material currently found on this page formerly appeared on 2nd Revised Page 2-25.

ACCESS SERVICE

2. General Regulations (Cont'd) (N)

2.3 Obligations of the Customer (Cont'd)

2.3.11 Jurisdictional Report and Certification Requirements (Cont'd)

(C) Jurisdictional Reports - Switched Access (Cont'd)

(4) Disputes Involving Jurisdictional Reports – Switched Access (Cont'd)

(e) When a PIU audit is conducted by the Telephone Company or an independent auditor under contract to the Telephone Company, the audit results will be furnished to the customer by Certified U.S. Mail. When a PIU audit is conducted by an independent auditor selected by the customer, the audit results will be furnished to the Telephone Company by Certified U.S. Mail. The Telephone Company will adjust the customer's PIU based upon the audit results. The PIU resulting from the audit shall be applied to the customer's usage for the quarter the audit is completed, the usage for the quarter prior to the completion of the audit, and the usage for the two (2) quarters following the completion of the audit. After that time, the customer may report revised PIU pursuant to (2)(g) or (h), above. If the revised PIU submitted by the customer represents a deviation of 5 percentages points or more from the audited PIU, and that deviation is not due to identifiable reasons, the provisions in (4)(a), above, may be applied.

(f) Both credit and debit adjustments will be made to the customer's interstate access charges based on the audit results for the specified periods to accurately reflect the interstate usage for the customer's account consistent with Section 2.4.1, following.

(N)

ACCESS SERVICE

2. General Regulations (Cont'd) (N)

2.3 Obligations of the Customer (Cont'd)

2.3.11 Jurisdictional Report and Certification Requirements (Cont'd)

(C) Jurisdictional Reports - Switched Access (Cont'd)

(4) Disputes Involving Jurisdictional Reports – Switched Access (Cont'd)

(g) If, as a result of an audit conducted by an independent auditor, a customer is found to have over-stated its PIU(s) by 20 percentage points or more, the Telephone Company shall require reimbursement from the customer for the cost of the audit. Such bill(s) shall be due and paid in immediately available funds within 30 days from receipt and shall carry a late payment penalty as set forth in Section 2.4.1, following, if not paid within the 30 days. (N)

ACCESS SERVICE

2. General Regulations (Cont'd)

2.3 Obligations of the Customer (Cont'd)

2.3.12 Determination of Interstate Charges for Mixed Interstate and Intrastate Switched Access Service

When mixed interstate and intrastate Switched Access Service is provided, all charges (i.e., nonrecurring, monthly and/or usage) including optional features charges, will be prorated between interstate and intrastate. The PIU factor(s) provided by the customer or developed by the Telephone Company as set forth in Section 2.3.11(C)(2), preceding, will serve as the basis for prorating the charges unless the Telephone Company is billing according to sufficient call details as set forth in Section 2.3.11(C)(1)(b), preceding. The percentage of an Access Service to be charged as interstate is applied in the following manner: (C) | (C)

(A) Monthly and Nonrecurring Charges

For monthly and nonrecurring chargeable rate elements, multiply the percent interstate use times the quantity of chargeable elements times the stated tariff rate per element. (C)

(B) Usage Sensitive Charges

For usage sensitive (i.e., access minutes and calls) chargeable rate elements, multiply the percent interstate use times actual use (i.e., measured or Telephone Company assumed average use) times the stated tariff rate.

(D)
(D)

ACCESS SERVICE

2. General Regulations (Cont'd)

2.4 Payment Arrangements and Credit Allowances

2.4.1 Payment of Rates, Charges and Deposits

(A) Deposits

The Telephone Company will only require a customer that has a proven history of late payments to the Telephone Company or that does not have established credit, to make a deposit as a guarantee of the payment of rates and charges. Such deposit may be required prior to establishing a service or at any time after the provision of a service to the customer. For purposes of this section, a proven history of late payments is defined as two (2) or more occasions within the preceding twelve (12) months in which payment for undisputed charges was not received within three (3) business days following the payment due date, provided the outstanding undisputed amount of each such individual unpaid bill represented at least ten (10) percent of the total charges on that individual bill. The Telephone Company will provide notice via overnight delivery to the person designated by the customer to receive such notice of the requirement to pay a deposit. The customer will be required to make payment of such deposit prior to the provision of service in those cases where the customer has not established credit with the Telephone Company, or otherwise within fifteen (15) business days of such notice. Such notice period will start the day after the notice is sent by overnight delivery. (C)

No such deposit will be required of a customer which is a successor of a company which has established credit and has no history of late payments to the Telephone Company. For new service(s) being established, such deposit will not exceed the estimated rates and charges for a two-month period. For existing services, such deposit will not exceed the actual rates and charges for a two (2) month period associated with each individual bill that met the criteria for late payments specified above. The fact that a deposit has been made in no way relieves the customer from complying with the Telephone Company's regulations as to the prompt payment of bills. At such time as the provision of the service to the customer is terminated, the amount of the deposit will be credited to the customer's account and any credit balance which may remain will be refunded. (C)

Certain material formerly found on this page can now be found on Original Page 2-27.1.

ACCESS SERVICE

2. General Regulations (Cont'd)

2.4 Payment Arrangements and Credit Allowances (Cont'd)

2.4.1 Payment of Rates, Charges and Deposits (Cont'd)

(A) Deposits (Cont'd)

Such a deposit will be refunded or credited to the account when the customer has established credit or, in any event, after the customer has established a one-year prompt payment record at any time prior to the termination of the provision of the service to the customer. In case of a cash deposit, for the period the deposit is held by the Telephone Company, the customer will receive interest at the same percentage rate as that set forth in (C)(2)(a) or in (C)(2)(b) following, whichever is lower. (M)

The rate will be compounded daily for the number of days from the date the customer deposit is received by the Telephone Company to and including the date such deposit is credited to the customer's account or the date the deposit is refunded by the Telephone Company. Should a deposit be credited to the customer's account, as indicated above, no interest will accrue on the deposit from the date such deposit is credited to the customer's account. (M)

Certain material currently found on this page formerly appeared on Original Page 2-27.

ACCESS SERVICE

2. General Regulations (Cont'd)

2.4 Payment Arrangements and Credit Allowances (Cont'd)

2.4.1 Payment of Rates, Charges and Deposits (Cont'd)

(B) Bill Dates

The Telephone Company shall bill on a current basis all charges incurred by and credits due to the customer under this tariff attributable to services established or discontinued during the preceding billing period. In addition, the Telephone Company shall bill in advance charges for all services to be provided during the ensuing billing period except for charges associated with service usage and for the Federal Government which will be billed in arrears. The bill day (i.e., the billing date of a bill for a customer for Access Service under this tariff), the period of service each bill covers and the payment date will be as follows:

(1) End User Access Service and Presubscription

For End User Access Service and Presubscription Service, the Telephone Company will establish a bill day each month for each end user account or advise the customer in writing of an alternate billing schedule. Alternate billing schedules shall not be established on less than 60 days notice or initiated by the Telephone Company more than twice in any consecutive 12 month period. The bill will cover End User Access Service charges for the ensuing billing period except for End User Access Service for the Federal Government which will be billed in arrears. Any applicable Presubscription Charges, any known unbilled charges for prior periods and any known unbilled adjustments for prior periods for End User Access Service and Presubscription Service will be applied to this bill. Such bills are due when rendered.

ACCESS SERVICE

2. General Regulations (Cont'd)

2.4 Payment Arrangements and Credit Allowances (Cont'd)

2.4.1 Payment of Rates, Charges and Deposits (Cont'd)

(B) Bill Dates (Cont'd)

(2) Access Services Other Than End User and Presubscription

For Service other than End User Access Service and Presubscription Service, the Telephone Company will establish a bill day each month for each customer account or advise the customer in writing of an alternate billing schedule. Alternate billing schedules shall not be established on less than 60 days' notice or initiated by the Telephone Company more than twice in any consecutive 12 month period.

The bill will cover nonusage sensitive service charges for the ensuing billing period for which the bill is rendered, any known unbilled nonusage sensitive charges for prior periods and unbilled usage charges for the period after the last bill day through the current bill day. Any known unbilled usage charges for prior periods and any known unbilled adjustments will be applied to this bill. Payment for such bills is due in immediately available funds by the payment date, as set forth in (C) following. If payment is not received by the payment date, a late payment penalty will apply as set forth in (C) following.

ACCESS SERVICE

2. General Regulations (Cont'd)

2.4 Payment Arrangements and Credit Allowances (Cont'd)

2.4.1 Payment of Rates, Charges and Deposits (Cont'd)

(C) Payment Dates and Late Payment Penalties

(1) All bills dated as set forth in (B) (2) preceding for service, other than End User Service and Presubscription Service, provided to the customer by the Telephone Company are due 31 days (payment date) after the bill day or by the next bill date (i.e., same date in the following month as the bill date), whichever is the shortest interval, except as provided herein, and are payable in immediately available funds. If the customer does not receive a bill at least 20 days prior to the 31 day payment due date, then the bill shall be considered delayed. When the bill has been delayed, upon request of the customer the due date will be extended by the number of days the bill was delayed. Such request of the customer must be accompanied with proof of late bill receipt.

ACCESS SERVICE

2. General Regulations (Cont'd)

2.4 Payment Arrangements and Credit Allowances (Cont'd)

2.4.1 Payment of Rates, Charges and Deposits (Cont'd)

(C) Payment Dates and Late Payment Penalties (Cont'd)

(1) (Cont'd)

If such payment date would cause payment to be due on a Saturday, Sunday or Legal Holiday, payment for such bills will be due from the customer as follows:

- If the payment date falls on a Sunday or on a Legal Holiday which is observed on a Monday, the payment date shall be the first non-Holiday day following such Sunday or Legal Holiday.

- If the payment date falls on a Saturday or on a Legal Holiday which is observed on Tuesday, Wednesday, Thursday or Friday, the payment date shall be the last non-Holiday day preceding such Saturday or Legal Holiday.

ACCESS SERVICE

2. General Regulations (Cont'd)

2.4 Payment Arrangements and Credit Allowances (Cont'd)

2.4.1 Payment of Rates, Charges and Deposits (Cont'd)

(C) Payment Dates and Late Payment Penalties (Cont'd)

(2) Further, if no payment is received by the payment date or if a payment or any portion of a payment is received by the Telephone Company after the payment date as set forth in (1) preceding, or if a payment or any portion of a payment is received by the Telephone Company in funds which are not immediately available to the Telephone Company, then a late payment penalty shall be due to the Telephone Company. The late payment penalty shall be the payment or the portion of the payment not received by the payment date times a late factor. The late factor shall be the lesser of:

(a) the highest interest rate (in decimal value) which may be levied by law for commercial transactions, compounded daily for the number of days from the payment date to and including the date that the customer actually makes the payment to the Telephone Company, or

(b) 0.000292 per day, compounded daily for the number of days from the payment date to and including the date that the customer actually makes the payment to the Telephone Company.

Certain material formerly found on this page can now be found on Original Page 2-32.1.

ACCESS SERVICE

2. General Regulations (Cont'd) (N)

2.4 Payment Arrangements and Credit Allowances (Cont'd)

2.4.1 Payment of Rates, Charges and Deposits (Cont'd) (N)

(D) Billing Disputes (T) (M)

(1) A good faith dispute requires the customer to provide a written claim to the Telephone Company. Instructions for submitting a dispute can be obtained by calling the billing inquiry number shown on the customer's bill, or, when available, by accessing such information on the Telephone Company's website also shown on the customer's bill. Such claim must identify in detail the basis for the dispute, and if the customer withholds the disputed amounts, it must identify the account number under which the bill has been rendered, the date of the bill, and the specific items on the bill being disputed to permit the Telephone Company to investigate the merits of the dispute. (N)

(2) The date of the dispute shall be the date on which the customer furnishes the Telephone Company the account information required in (D)(1), above.

(3) The date of resolution is the date the Telephone Company completes its investigation, provides written notice to the customer regarding the disposition of the claim, i.e., resolved in favor of the customer or resolved in favor of the Telephone Company, and credits the customer's account, if applicable. (N)

Certain material currently found on this page formerly appeared on Original Page 2-32.

ACCESS SERVICE

2. General Regulations (Cont'd) (N)

2.4 Payment Arrangements and Credit Allowances (Cont'd)

2.4.1 Payment of Rates, Charges and Deposits (Cont'd)

(D) Billing Disputes (Cont'd) (N)

(4) In the event that a billing dispute concerning any charges billed to the customer by the Telephone Company is resolved in favor of the Telephone Company, any payments withheld pending settlement of the dispute shall be subject to the late payment penalty set forth in (C)(2), above. (C) (M)

(5) If the customer pays the bill in full by the payment due date, and later initiates a billing dispute within ninety (90) days of the payment due date, penalty interest may be applicable.

(a) If the billing dispute is resolved in favor of the customer, the customer shall receive a credit from the Telephone Company. This credit will be an amount equal to the disputed amount resolved in the customer's favor times a penalty factor. This amount will apply from the date of the customer's payment through the date on which the customer receives the disputed amount credit from the Telephone Company. The penalty factor shall be the lesser of: (C) (M)

(i) the highest interest rate (in decimal value) which may be levied by law for commercial transactions, compounded daily for the number of days from the first date to and including the last date of the period involved, or (T) (M)

(ii) 0.000292 per day, compounded daily for the number of days from the first date to and including the last date of the period involved. (T) (M)

Certain material currently found on this page formerly appeared on Original Page 2-32 and Original Page 2-33.

ACCESS SERVICE

2. General Regulations (Cont'd)

2.4 Payment Arrangements and Credit Allowances (Cont'd)

2.4.1 Payment of Rates, Charges and Deposits (Cont'd)

(D) Billing Disputes (Cont'd) (T)

(b) If the dispute is resolved in favor of the Telephone Company, neither a late payment charge nor a penalty interest charge is applicable. (C)

(6) If the customer pays the bill in full by the payment due date, and later initiates a billing dispute after (90) days of the payment due date, penalty interest may be applicable.

(a) If the billing dispute is resolved in favor of the customer, the customer shall receive a credit from the Telephone Company. This credit will be an amount equal to the disputed amount resolved in the customer's favor times a penalty factor. This amount will apply from the date of the dispute through the date on which the customer receives the disputed amount credit from the Telephone Company. The penalty factor shall be the lesser of: (C)

(i) the highest interest rate (in decimal value) which may be levied by law for commercial transactions, compounded daily for the number of days from the first date to and including the last date of the period involved, or (T)

(ii) 0.000292 per day, compounded daily for the number of days from the first date to and including the last date of the period involved. (T)

(b) If the dispute is resolved in favor of the Telephone Company, neither a late payment charge nor a penalty interest charge is applicable. (C)

(C)

Certain material formerly found on this page can now be found on Original Page 2-32.2 and Original Page 2-33.1.

ACCESS SERVICE

2. General Regulations (Cont'd) (N)

2.4 Payment Arrangements and Credit Allowances (Cont'd)

2.4.1 Payment of Rates, Charges and Deposits (Cont'd) (N)

(E) Proration of Charges (T) (M)

Adjustments for the quantities of services established or discontinued in any billing period beyond the minimum period set forth for services in other sections of this tariff will be prorated to the number of days based on a 30 day month. The Telephone Company will, upon request, furnish within 30 days of a request and at no charge to the customer such detailed information as may reasonably be required for verification of any bill. (M)

Certain material currently found on this page formerly appeared on Original Page 2-33.

ACCESS SERVICE

2. General Regulations (Cont'd)

2.4 Payment Arrangements and Credit Allowances (Cont'd)

2.4.1 Payment of Rates, Charges and Deposits (Cont'd)

(F) Rounding of Charges (T)

When a rate as set forth in this tariff is shown to more than two decimal places, the charges will be determined using the rate shown. The resulting amount will then be rounded to the nearest penny (i.e., rounded to two decimal places).

2.4.2 Minimum Periods

The minimum period for which services are provided and for which rates and charges are applicable is one month except for those services set forth in Section 6 (Switched Access Service), and those services set forth in 6.1.3 (Switched Access High Capacity DS3 Entrance Facility and High Capacity DS3 Direct Trunked Transport), 7.2.4, (Part-time Video and Program Audio), and 7.2.8 (High Capacity DS1 and DS3 Service, Synchronous Optical Channel Service and Frame Relay Access Service 1.544 Mbps Port), or as otherwise specified.

The minimum period for which service is provided and for which rates and charges are applicable for a Specialized Service or Arrangement provided on an individual case basis as set forth in Section 12 following, is one month unless a different minimum period is established with the individual case filing.

When a service is discontinued prior to the expiration of the minimum period, charges are applicable, whether the service is used or not, as follows:

(A) When a service with a one month minimum period is discontinued prior to the expiration of the minimum period, a one month charge will apply at the rate level in effect at the time service is discontinued.

(B) When a service with a minimum period greater than one month is discontinued prior to the expiration of the minimum period, except for DS3 monthly service and DS1 and DS3 Optional Payment Plans as provided for in Sec. 5.5.1 and 7.2.8 following, the applicable charge will be the lesser of (1) the Telephone Company's total nonrecoverable costs less the net salvage value for the discontinued service or (2) the total monthly charges, at the rate level in effect at the time service is discontinued, for the remainder of the minimum period.

ACCESS SERVICE

2. General Regulations (Cont'd)

2.4 Payment Arrangements and Credit Allowances (Cont'd)

2.4.3 Cancellation of an Order for Service

Provisions for the cancellation of an order for service are set forth in other applicable sections of this tariff.

2.4.4 Credit Allowance for Service Interruptions

(A) General

A service is interrupted when it becomes unusable to the customer because of a failure of a facility component used to furnish service under this tariff or in the event that the protective controls applied by the Telephone Company result in the complete loss of service by the customer as set forth in 6.2.1 following. An interruption period starts when an inoperative service is reported to the Telephone Company, and ends when the service is operative.

(B) When a Credit Allowance Applies

In case of an interruption to any service, allowance for the period of interruption, if not due to the negligence of the customer, shall be provided.

For Digital Data Access, SD Codes D1 through D6 and High Capacity, HC1, Special Access Services, any period during which the error performance is below that specified for the service will be considered as an interruption.

Service interruptions for Specialized Service or Arrangements provided under Section 12 following, shall be administered in the same manner as those set forth in this section (2.4.4) unless other regulations are specified with the individual case filing.

ACCESS SERVICE

2. General Regulations (Cont'd)

2.4 Payment Arrangements and Credit Allowances (Cont'd)

2.4.4 Credit Allowance for Service Interruptions (Cont'd)

(B) When a Credit Allowance Applies (Cont'd)

Credit allowances are computed as follows:

(1) Special Access Service other than Program Audio and Video and flat rated Switched Access Service rate elements (C) (C)

For Special Access Services other than Program Audio and Video Services, and for flat rated Switched Access Service rate elements (i.e., Entrance Facility, Direct Trunked Transport and Multiplexing), no credit shall be allowed for an interruption of less than 30 minutes. The customer shall be credited for an interruption of 30 minutes or more at the rate of 1/1440 of the monthly charges for the facility or service for each period of 30 minutes or Major Fraction Thereof that the interruption continues. (C) (C)

The monthly charges used to determine the credit shall be as follows:

(a) Two-point Services

For two-point services, the monthly charge shall be the total of all the monthly rate element charges associated with the service (i.e., two channel terminations, channel mileage and optional features and functions).

(b) Multipoint Services

For multipoint services, the monthly charge shall be only the total of all the monthly rate element charges associated with that portion of the service that is inoperative (i.e., a channel termination per customer designated premises, channel mileage and optional features and functions).

ACCESS SERVICE

2. General Regulations (Cont'd)

2.4 Payment Arrangements and Credit Allowances (Cont'd)

2.4.4 Credit Allowance for Service Interruptions (Cont'd)

(B) When a Credit Allowance Applies (Cont'd)

(1) Special Access Service other than Program Audio and Video and flat rated Switched Access Service rate elements (Cont'd) (C) (C)

(c) Multiplexed Services

For multiplexed services, the monthly charge shall be the total of all the monthly rate element charges associated with that portion of the service that is inoperative. When the facility which is multiplexed or the multiplexer itself is inoperative, the monthly charge shall be the total of all the monthly rate element charges associated with the service (i.e., the channel termination, channel mileage, Entrance Facility, Direct Trunked Transport and optional (C) features and functions, including the multiplexer on the (C) facility to the hub, and the channel terminations, channel mileages and optional features and functions on the individual services from the hub). When the service which rides a channel of the multiplexed facility is inoperative, the monthly charge shall be the total of all the monthly rate element charges associated with that portion of the service from the hub to a customer premises (i.e., channel termination, channel mileage, (C) Direct Trunked Transport and optional features and functions). (C)

(d) Flat rated Switched Access rate elements (T) (N)

For flat rated Switched Access Service rate elements, the monthly charge shall be the total of all the monthly rate element charges associated with the service (i.e., Entrance Facility, Direct Trunked Transport and Multiplexing). (N)

ACCESS SERVICE

2. General Regulations (Cont'd)

2.4 Payment Arrangements and Credit Allowances (Cont'd)

2.4.4 Credit Allowance for Service Interruptions (Cont'd)

(B) When a Credit Allowance Applies (Cont'd)

(2) Program Audio and Video Special Access Services

For Program Audio and Video Special Access Services, no credit shall be allowed for an interruption of less than 30 seconds. The customer shall be credited for an interruption of 30 seconds or more as follows:

(a) For two-point services, when monthly rates are applicable, the credit shall be at the rate of 1/8640 of the monthly charges for the service for each period of 5 minutes or fraction thereof that the interruption continues.

(b) For two-point services, when daily rates are applicable, the credit shall be at the rate of 1/288 of the daily charges for the service for each period of 5 minutes or fraction thereof that the interruption continues.

(c) For multipoint services, when monthly rates are applicable, the credit shall be at the rate of 1/8640 of the monthly charges for each channel termination, channel mileage and optional features and functions that are inoperative for each period of 5 minutes or fraction thereof that the interruption continues.

ACCESS SERVICE

2. General Regulations (Cont'd)

2.4 Payment Arrangements and Credit Allowances (Cont'd)

2.4.4 Credit Allowance for Service Interruptions (Cont'd)

(B) When a Credit Allowance Applies (Cont'd)

(2) Program Audio and Video Special Access Services (Cont'd)

(d) For multipoint services, when daily rates are applicable, the credit shall be at the daily rate of 1/288 of the daily charges for channel termination, channel mileage and optional features and functions that are inoperative for each period of 5 minutes or fraction thereof that the interruption continues.

(e) For multipoint services, the credit for the monthly or daily charges includes the charges for the distribution amplifier only when the distribution amplifier is inoperative.

(f) When two or more interruptions occur during a period of 5 consecutive minutes, such multiple interruptions shall be considered as one interruption.

(3) Switched Access

For Switched Access Service, no credit shall be allowed for an interruption of less than 24 hours. The customer shall be credited for an interruption of 24 hours or more at the rate of 1/30 of any applicable monthly rate or assumed minutes of use charge for each period of 24 hours or Major Fraction Thereof that the interruption continues.

ACCESS SERVICE

2. General Regulations (Cont'd)

2.4 Payment Arrangements and Credit Allowances (Cont'd)

2.4.4 Credit Allowance for Service Interruptions (Cont'd)

(B) When a Credit Allowance Applies (Cont'd)

(4) Credit Allowances Cannot Exceed Monthly Rate

The credit allowance(s) for an interruption or for a series of interruptions shall not exceed any monthly rate for the service interrupted in any 1 monthly billing period.

(C) When a Credit Allowance Does Not Apply

No credit allowance will be made for:

(1) Interruptions caused by the negligence of the customer;

(2) Interruptions of a service due to the failure of equipment or systems provided by the customer or others;

(3) Interruptions of a service during any period in which the Telephone Company is not afforded access to the premises where the service is terminated;

(4) Interruptions of a service when the customer has released that service to the Telephone Company for maintenance purposes, to make rearrangements, or for the implementation of an order for a change in the service during the time that was negotiated with the customer prior to the release of that service. Thereafter, a credit allowance as set forth in (B) preceding applies;

ACCESS SERVICE

2. General Regulations (Cont'd)

2.4 Payment Arrangements and Credit Allowances (Cont'd)

2.4.4 Credit Allowance for Service Interruptions (Cont'd)

(C) When a Credit Allowance Does Not Apply (Cont'd)

(5) Interruptions of a service which continue because of the failure of the customer to authorize replacement of any element of special construction, as set forth in NATIONAL EXCHANGE CARRIER ASSOCIATION, INC. TARIFF F.C.C. NO. 3 for SPECIAL CONSTRUCTION. The period for which no credit allowance is made begins on the seventh day after the customer receives the Telephone Company's written notification of the need for such replacement and ends on the day after receipt by the Telephone Company of the customer's written authorization for such replacement; (x) | (x)

(6) Periods when the customer elects not to release the service for testing and/or repair and continues to use it on an impaired basis; or

(7) An interruption or a group of interruptions, resulting from a common cause, that would result in credit in an amount less than one dollar.

(D) Use of an Alternative Service Provided by the Telephone Company

Should the customer elect to use an alternative service provided by the Telephone Company during the period that a service is interrupted, the customer must pay the tariffed rates and charges for the alternative service used.

(x) Filed under authority of Special Permission No. 93-598 of the Federal Communications Commission.

ACCESS SERVICE

2. General Regulations (Cont'd)

2.4 Payment Arrangements and Credit Allowances (Cont'd)

2.4.4 Credit Allowance for Service Interruptions (Cont'd)

(E) Temporary Surrender of a Service (Cont'd)

In certain instances, the customer may be requested by the Telephone Company to surrender a service for purposes other than maintenance, testing or activity relating to a service order. If the customer consents, a credit allowance will be granted. The credit allowance will be 1/1440 of the monthly rate for each period of 30 minutes or fraction thereof that the service is surrendered. In no case will the credit allowance exceed the monthly rate for the service surrendered in any one monthly billing period.

2.4.5 Re-establishment of Service Following Fire, Flood or Other Occurrence

(A) Nonrecurring Charges Do Not Apply

Charges do not apply for the re-establishment of service following a fire, flood or other occurrence attributed to an Act of God provided that:

(1) The service is of the same type as was provided prior to the fire, flood or other occurrence.

(2) The service is for the same customer.

(3) The service is at the same location on the same premises.

(4) The re-establishment of service begins within 60 days after Telephone Company service is available. (The 60 day period may be extended a reasonable period if the renovation of the original location on the premises affected is not practical within the allotted time period).

ACCESS SERVICE

2. General Regulations (Cont'd)

2.4 Payment Arrangements and Credit Allowances (Cont'd)

2.4.5 Re-establishment of Service Following Fire, Flood or Other Occurrence (Cont'd)

(B) Nonrecurring Charges Apply

Nonrecurring Charges apply for establishing service at a different location on the same premises or at a different premises pending re-establishment of service at the original location.

2.4.6 Title or Ownership Rights

The payment of rates and charges by customers for the services offered under the provisions of this tariff does not assign, confer or transfer title or ownership rights to proposals or facilities developed or utilized, respectively, by the Telephone Company in the provision of such services.

2.4.7 Access Services Provided By More Than One Telephone Company

When an Access Service is provided by more than one Telephone Company, the Telephone Companies involved will mutually agree upon one of the billing methods as set forth in (B) (1) and (2) following based on the service being provided. The Telephone Companies will notify the customer in writing of the billing method being used. The customer will place the order for the service as set forth in 5.3 following dependent upon the billing method.

(A) Non Meet Point Billing/Feature Group A

Non Meet Point Billing under a Revenue Sharing Agreement is the generally accepted billing method for Feature Group A Switched Access Service. At the agreement of the participating Telephone Companies, Meet Point Billing may apply to jointly provided Feature Group A services as set forth in (B) following.

ACCESS SERVICE

2. General Regulations (Cont'd)

2.4 Payment Arrangements and Credit Allowances (Cont'd)

2.4.7 Access Services Provided by More Than One Telephone Company

(A) Non Meet Point Billing/Feature Group A (Cont'd)

(1) Single Company Billing/Revenue Sharing

All Telephone Companies jointly providing Feature Group A service will receive an order or a copy of the order, from the customer, as specified in 5.3.1(A) following. The telephone company that provides the dial tone will arrange to provide the service, determine the applicable charges and bill the customer for the entire service in accordance with its Access Services tariff as provided for under a Feature Group A Revenue Sharing Agreement.

(B) Meet Point Billing

Meet Point Billing is required when an access service is provided by multiple Telephone Companies for Feature Groups B, C, and D Switched Access Services and Special Access. It is optional for Feature Group A Switched Access Service.

Each Telephone Company jointly providing the access service will receive an order or a copy of the order from the customer as specified in 5.3.2 following and arrange to provide the service.

For usage rated access services the access minutes of use will generally be determined by the recording company. Where the recording company is not the Bill Rendering Company, the recording company will provide detailed usage records to the Bill Rendering Company to develop the access minutes.

ACCESS SERVICE

2. General Regulations (Cont'd)

2.4 Payment Arrangements and Credit Allowances (Cont'd)

2.4.7 Access Services Provided by More Than One Telephone Company

(B) Meet Point Billing (Cont'd)

The Bill Rendering Company in a single bill arrangement for Feature Groups B, C, and D Switched Access Services, is normally the end user's end office, for WATS usage the Bill Rendering Company is normally the WATS Serving Office. The name of the Bill Rendering Company will be included in the meet point billing notification provided to the customer by all the telephone companies on all meet point billed services.

The non Bill Rendering Company(s) is any Telephone Company(s) in whose territory a segment of the Local Transport or Channel Mileage is provided and/or where the customer's Point of Termination is located.

There are two Meet Point Billing Options, Single Bill and Multiple Bill. These billing options are explained in (1) and (2) following. The Single Bill option is the preferred method. However, when a single bill option can not be agreed to by all telephone companies providing service, the multiple bill option is the default.

Each telephone company must provide meet point billing notification to the customer, in writing, when new service is ordered or 30 days prior to changing an existing meet point arrangement. The notification should include the following:

ACCESS SERVICE

2. General Regulations (Cont'd)

2.4 Payment Arrangements and Credit Allowances (Cont'd)

2.4.7 Access Services Provided by More Than One Telephone Company

(B) Meet Point Billing (Cont'd)

- The Meet Point Billing Option that will be used;
- The Telephone Company(s) that will render the bill(s);
- The Telephone Company(s) to whom payment(s) should be remitted; and
- The Telephone Company(s) that will provide the bill inquiry function.

A Telephone Company that renders a meet point bill, the Bill Rendering Company, will render the bill in accordance with the industry standards as described in the Multiple Exchange Carrier Access Billing (MECAB) Guidelines and the Multiple Exchange Carrier Ordering and Design (MECOD) Guidelines. The bill will include cross reference(s) to the other telephone Company(s) providing service and common circuit identifiers. Should a billing dispute arise, the terms and conditions of the Bill Rendering company will apply.

(1) Single Bill Option

The single bill option allows the customer to receive one bill for access services that are provided by more than one company. The single bill option provides the following two billing alternatives: (C)

- Single Bill/Multiple Tariff; and (C)
- Single Bill/Single Tariff. (D)

These options are described following in (a) and (b) respectively. (C)

ACCESS SERVICE

2. General Regulations (Cont'd)

2.4 Payment Arrangements and Credit Allowances (Cont'd)

2.4.7 Access Services Provided by More Than One Telephone Company

(B) Meet Point Billing (Cont'd)

(1) Single Bill Option (Cont'd)

(a) Single Bill/Multiple Tariff

The single bill/multiple tariff bill is prepared by the Bill Rendering Company but reflects all rates and charges for each connecting company's part of the service based on each company's access tariff.

The Bill Rendering Company will:

- determine and include all recurring and nonrecurring rates and charges for each involved Telephone Company;

- identify each involved Telephone Company's rates and charges separately on the bill;

- forward the bill to the customer and provide a copy of the bill or other substantiation of the charges to the connecting Telephone Companies; and

- advise the customer how to remit the payment, either directly to each Telephone Company involved in the provision of this meet point billed service, or, as a single payment made to the Bill Rendering Company. If payments are to be sent directly to the Bill Rendering Company, the non Bill Rendering Company(s) will provide the customer with written authorization for the payment arrangement.

ACCESS SERVICE

2. General Regulations (Cont'd)

2.4 Payment Arrangements and Credit Allowances (Cont'd)

2.4.7 Access Services Provided by More Than One Telephone Company

(B) Meet Point Billing (Cont'd)

(1) Single Bill Option (Cont'd)

(D)

(D)

ACCESS SERVICE

2. General Regulations (Cont'd)

2.4 Payment Arrangements and Credit Allowances (Cont'd)

2.4.7 Access Services Provided by More Than One Telephone Company

(B) Meet Point Billing (Cont'd)

(1) Single Bill Option (Cont'd)

(D)

(D)

ACCESS SERVICE

2. General Regulations (Cont'd)

2.4 Payment Arrangements and Credit Allowances (Cont'd)

2.4.7 Access Services Provided by More Than One Telephone Company

(B) Meet Point Billing (Cont'd)

(1) Single Bill Option (Cont'd)

(b) Single Bill/Single Tariff (T)

The single bill/single tariff bill provides a meet point bill that is billed completely at the Billing Rendering Company's tariff rates and regulations.

The Bill Rendering Company will:

- determine and include on the access bill all usage data and all other recurring and nonrecurring rates and charges per its access tariff; and

- forward the bill to the customer.

The customer will remit the payment to the Bill Rendering Company.

(2) Multiple Bill Option

Under the Multiple Bill Option each company providing the access service will render an access bill to the customer for its portion of the service based on its access tariff rates and regulations. For switched access Multiple bills the end office company is generally the Initial Billing Company (IBC). The IBC is the company that calculates the access minutes to be billed to the customer and provides this data to each connecting company providing service, i.e., the Subsequent Billing Company(s). Each company, IBC and SBC, will:

ACCESS SERVICE

2. General Regulations (Cont'd)

2.4 Payment Arrangements and Credit Allowances (Cont'd)

2.4.7 Access Services Provided by More Than One Telephone Company

(B) Meet Point Billing (Cont'd)

(2) Multiple Bill Option (Cont'd)

- prepare its own bill;
- determine its charge(s) for Local Transport, Directory Transport, and/or Channel Mileage as set forth in (3) following;
- determine and include all recurring and nonrecurring rates and charges of its access tariff;
- reflect its Billing Account Reference (BAR) and all connecting company Billing Account Cross Reference (BACR) code(s);
- forward its bill to the customer.

The customer will remit payment directly to each Bill Rendering Company.

(3) Determination of Meet Point Billed Local Transport and Channel Mileage Charges

Each Telephone Company's portion of the Local Transport and Channel mileage will be developed as follows:

(a) Determine the appropriate Local Transport or Channel Mileage by computing the number of airline miles between the Telephone Company premises (end office, access tandem or serving wire centers for

ACCESS SERVICE

2. General Regulations (Cont'd)

2.4 Payment Arrangements and Credit Allowances (Cont'd)

2.4.7 Access Services Provided by More Than One Telephone Company

(B) Meet Point Billing (Cont'd)

(3) Determination of Meet Point Billed Local Transport and Channel Mileage Charges (Cont'd)

(a) (Cont'd)
Switched Access or serving wire centers for Special Access) using the V&H method set forth respectively in 6.4.6 and 7.2.5 following.

(b) Determine the billing percentage (BP), as set forth in NATIONAL EXCHANGE CARRIER ASSOCIATION, INC. TARIFF F.C.C. NO. 4, which represents the portion of the service provided by each Telephone Company.

(c) For Feature Groups A, B, C and D Tandem Switched Transport: (C)

- multiply the number of originating and terminating access minutes of use routed over the facility times the number of airline miles, as set forth in (a) preceding, times the BP for each Telephone Company, as set forth in (b) preceding, times the Tandem Switched Facility rate; (C) (C)

- multiply the Tandem Switched Termination rate times the number of originating and terminating access minutes routed over the facility . (C)

- When a tandem office is located within the operating territory of a Telephone Company, participating in this Tariff, multiply the Tandem Switching rate times the number of originating and terminating access minutes that are switched at the tandem. (N) (N)

ACCESS SERVICE

2. General Regulations (Cont'd)

2.4 Payment Arrangements and Credit Allowances (Cont'd)

2.4.7 Access Services Provided by More Than One Telephone Company

(B) Meet Point Billing (Cont'd)

(3) Determination of Meet Point Billed Local Transport and Channel Mileage Charges (Cont'd)

(c) (Cont'd)

The Tandem Switched Termination rate is applied as set forth in 6.1.3(A) following. The Switched Access Nonrecurring Charges are applied as set forth in 6.4.1(B) following. (Note: The BP is not applied to the Switched Access Tandem Switched Termination rate or any Nonrecurring Charge.)

(d) For Feature Groups A, B, C, and D Direct Trunked Transport:

- multiply the number of airline miles, as set forth in (a) preceding, times the BP for each Telephone Company, as set forth in (b) preceding, times the Direct Trunked Facility rate.

- The Direct Trunked Termination rate is applied as set forth in 6.1.3(A) following. The Switched Access Nonrecurring Charges are applied as set forth in 6.4.1(B) following. (Note: The BP is not applied to either the Switched Access Direct Trunked Termination rate or any Nonrecurring Charge.)

(e) For Feature Groups A, B, C, and D.

- When the end office (which may be a Remote Switching Module or WATS Serving Office) is located within the operating territory of a Telephone Company participating in this Tariff, multiply the Residual Interconnection Charge rate times the number of originating and terminating access minutes that are switched at the end office.

- When the Entrance Facility and/or Multiplexing equipment is located within the operating territory of a Telephone Company participating in this Tariff, the Multiplexing charge will apply.

- The Billing Percentage (BP) is not applicable to the Transport Interconnection charge, Entrance Facility or Multiplexer. (C)

ACCESS SERVICE

2. General Regulations (Cont'd)

2.4 Payment Arrangements and Credit Allowances (Cont'd)

2.4.7 Access Services Provided by More Than One Telephone Company

(B) Meet Point Billing (Cont'd)

(3) Determination of Meet Point Billed Local Transport and Channel Mileage Charges (Cont'd)

(f) For Special Access, multiply the number of airline miles, as set forth in (a) preceding, times the BP for each Telephone Company, as set forth in (b) preceding, times the Channel Mileage Facility rate and add the Channel Mileage Termination rate. (T) (M)

The Special Access Channel Mileage Termination rate and nonrecurring charges are applied as set forth in 7.2.1(B)(2) and 7.2.2(C) following. (Note: The BP is not applied to either the Channel Mileage Termination Recurring Rate or any Nonrecurring Charge.) (M)

(g) When three or more Telephone Companies are involved in providing an Access Service, the intermediate Telephone Company(s) will determine the appropriate charges as set forth in (c) through (f) preceding. Additionally, when a segment of the Tandem Switched Facility, Direct Trunked Facility or Channel Mileage Facility is measured to the intermediate office(s), the Tandem Switched Termination, Direct Trunked Termination or Channel Mileage Termination rates are also applied at the intermediate Telephone Company(s) office(s). (T) (C) (C)

ACCESS SERVICE

2. General Regulations (Cont'd)

2.4 Payment Arrangements and Credit Allowances (Cont'd)

2.4.7 Access Services Provided by More Than One Telephone Company

(B) Meet Point Billing (Cont'd)

(3) Determination of Meet Point Billed Local Transport and Channel Mileage Charges (Cont'd)

(h) Example - Switched Access (T)

Layout

- Feature Group D Switched Access is ordered to End Office A. (C)
- End Office A is in the operating territory of Telephone Company A (TC A). (C)
- Customer designated premises is in the operating territory of Telephone Company B (TC B). (C)

Telephone Company A (TC A) Operating Territory	Telephone Company B (TC B) Operating Territory

(C)

(C)

ACCESS SERVICE

2. General Regulations (Cont'd)

2.4 Payment Arrangements and Credit Allowances (Cont'd)

2.4.7 Access Services Provided by More Than One Telephone Company

(B) Meet Point Billing (Cont'd)

(3) Determination of Meet Point Billed Local Transport and Channel Mileage Charges (Cont'd)

(h) Example - Switched Access (Cont'd)

The following example reflects the rate calculations for TC A. Rates for a company not participating in this tariff would appear in that company's access tariff.

- Assume:

Airline miles (ALM) TC A premises to TC B Serving Wire Center = 22.1 , rounded = 23 .

Billing Percentage (BP)
TC A = 80%
TC B = 20%

Access Minutes (AM) = 9000

Tandem Switched Facility Rate = TSF

Tandem Switched Termination Rate = TST

Tandem Switching Rate = TS

Transport Interconnection Charge = TIC (C)

Carrier Common Line Charge = CCL

End Office Charges = EO

ACCESS SERVICE

2. General Regulations (Cont'd)

2.4 Payment Arrangements and Credit Allowances (Cont'd)

2.4.7 Access Services Provided by More Than One Telephone Company

(B) Meet Point Billing (Cont'd)

(3) Determination of Meet Point Billed Local Transport and Channel Mileage Charges (Cont'd)

(h) Example - Switched Access (Cont'd)

- Telephone Company A charges are:

Tandem Switched Facility charge
= 9,000 min. x 23 mi. x 80% x TSF rate

Tandem Switched Termination charge
= 9,000 min. x TST rate

Tandem Switching charge
= 9,000 x TS rate

Transport Interconnection charge (C)
= 9,000 min. x TIC rate (C)

Carrier Common Line charge
= 9,000 min. x CCL rate

End Office Charges
= 9,000 min. x EO rates

ACCESS SERVICE

2. General Regulations (Cont'd)

2.5 Connections

Equipment and Systems (i.e., terminal equipment, multiline terminating systems and communications systems) may be connected with Switched and Special Access Service furnished by the Telephone Company where such connection is made in accordance with the provisions specified in Technical Reference Publication AS No. 1 and in 2.1 preceding. (x)

(x) Filed under authority of Special Permission No. 93-598 of the Federal Communications Commission.

ACCESS SERVICE

2. General Regulations (Cont'd)

2.6 Definitions

Certain terms used herein are defined as follows:

800 Series Service

800 Series Service is a generic term for access services associated with toll free numbers, which include 800, 888, 877, 866, 855, 844, 833 and 822.

800 Series Data Base Access Service

800 Series Data Base Access Service is a generic term for data base access services associated with toll free numbers, which include 800, 888, 877, 866, 855, 844, 833 and 822.

Access Code

The term "Access Code", with the exception of Feature Group B (FGB) with an Abbreviated Dial Arrangement (ADA), denotes a uniform access code assigned by the Telephone Company to an individual customer in the form of 10XXX or 101XXX X and 950-XXXX.

Access Minutes

For the purpose of calculating chargeable usage, the term "Access Minutes" denotes customer usage of exchange facilities in the provision of interstate or foreign service. On the originating end of an interstate or foreign call, usage is measured from the time the originating end user's call is delivered by the Telephone Company to and acknowledged as received by the customer's facilities connected with the originating exchange. On the terminating end of an interstate or foreign call, usage is measured from the time the call is received by the end user in the terminating exchange. Timing of usage at both originating and terminating ends of an interstate or foreign call shall terminate when the calling or called party disconnects, whichever event is recognized first in the originating and terminating exchanges, as applicable.

Access Order (N)

For Service Provider Number Portability Query Service, N-1 telecommunications carriers who arrange in advance for the Telephone Company to perform queries on their behalf must identify where calls will terminate, i.e., which end office or tandem switch, and provide rolling three months estimates of the volume of traffic including estimated total monthly traffic and maximum busy hour volumes and the Telephone Company switch to which this traffic volume is routed. (N)

ACCESS SERVICE

2. General Regulations (Cont'd)

2.6 Definitions (Cont'd)

Access Tandem

The term "Access Tandem" denotes a Telephone Company or centralized equal access provider switching system that provides a concentration and distribution function for originating or terminating traffic between end offices and a customer designated premises.

Add/Drop Multiplexing

The term "Add/Drop Multiplexing" denotes a multiplexing function offered in connection with SONET that allows lower level signals to be added or dropped from a high speed optical carrier channel in a wire center. The connection to the add/drop multiplexer is via a channel to a Central Office Port at a specific digital speed (i.e., DS3, DS1, etc.)

Advanced Intelligent Network (AIN)

The term "Advanced Intelligent Network (AIN)" denotes a telecommunications network architecture that uses databases to facilitate call processing, call routing, and network management, allowing carriers to change the routing of both inbound and outbound calls from moment to moment.

Aggregator

The term “Aggregator” denotes any entity that, in the ordinary course of its operations, makes telephones available to the public or to transient users of its premises, for interstate telephone calls using a provider of operator services.

Answer/Disconnect Supervision

The term "Answer/Disconnect Supervision" denotes the transmission of the switch trunk equipment supervisory signal (off-hook or on-hook) to the customer's point of termination as an indication that the called party has answered or disconnected.

Asymmetrical Digital Subscriber Line (ADSL)

The term “Asymmetrical Digital Subscriber Line (ADSL)” denotes an access technology that allows voice and high speed data to be sent simultaneously over local exchange service facilities. ADSL supports data rates of up to 1.544 Mbps when receiving data (C)
(downstream rate) and up to 512 kbps when sending data (upstream rate). (C)

Asynchronous Transfer Mode (ATM)

The term "Asynchronous Transfer Mode (ATM)" denotes a high speed networking technology that utilizes fixed-length cells. ATM is connection-oriented and provides traffic routing prioritization parameters which enable different types of traffic such as voice, data and video to be carried over the same network.

ACCESS SERVICE

2. General Regulations (Cont'd)

2.6 Definitions (Cont'd)

Attenuation Distortion

The term "Attenuation Distortion" denotes the difference in loss at specified frequencies relative to the loss at 1004 Hz, unless otherwise specified.

Balance (100 Type) Test Line

The term "Balance (100 Type) Test Line" denotes an arrangement in an end office which provides for balance and noise testing.

Billing Name and Address (N)

The term “Billing Name and Address” (BNA) means the name and address provided to a local exchange company by each of its local exchange customers to which the local exchange company directs bills for its services. (N)

Bit

The term "Bit" denotes the smallest unit of information in the binary system of notation.

Business Day

The term "Business Day" denotes the times of day that a company is open for business. Generally, in the business community, these are 8:00 or 9:00 a.m. to 5:00 or 6:00 p.m., respectively, with an hour for lunch, Monday through Friday, resulting in a standard forty (40) hour work week. However, Business Day hours for the Telephone Company may vary based on company policy, union contract and location.

ACCESS SERVICE

2. General Regulations (Cont'd)

2.6 Definitions (Cont'd)

Busy Hour Minutes of Capacity (BHMC)

The term "Busy Hour Minutes of Capacity (BHMC)" denotes the customer specified maximum amount of Switched Access Service and/or Directory Assistance Service access minutes the customer expects to be handled in an end office switch during any hour in an 8:00 a.m. to 11:00 p.m. period for the Feature Group and/or Directory Assistance Service ordered. This customer specified BHMC quantity is the input data the Telephone Company uses to determine the number of transmission paths for the Feature Group and/or Directory Assistance Service ordered.

Call

The term "Call" denotes a customer attempt for which complete address information (e.g., 0-, 911, or 10 digits) is provided to the serving dial tone office.

Carrier or Common Carrier

See Interexchange Carrier.

Carrier Identification Code (CIC) (N)

The term "Carrier Identification Code (CIC)" denotes a numeric code assigned by the North American Numbering Plan (NANP) Administrator for the provisioning of Feature Group B or Feature Group D Switched Access Services. The numeric code is unique to each carrier and is used by the Telephone Company to route switched access traffic to the Customer Designated Premises. (N)

CCS

The term "CCS" denotes a hundred call seconds, which is a standard unit of traffic load that is equal to 100 seconds of usage or capacity of a group of servers (e.g., trunks).

Cell (N)

The term "Cell" denotes the fixed-length packet used to carry data across an Asynchronous Transfer Mode (ATM) network. A "Cell" consists of 53 bytes, five of which carry header information. (N)

Central Office

See End Office.

ACCESS SERVICE

2. General Regulations (Cont'd)

2.6 Definitions (Cont'd)

Central Office Maintenance Technician

The term "Central Office Maintenance Technician" denotes a Telephone Company employee who performs installation and/or repair work, including testing and trouble isolation, within the Telephone Company Central Office.

Central Office Prefix

The term "Central Office Prefix" denotes the first three digits (NXX) of the seven digit telephone number assigned to a customer's Telephone Exchange Service when dialed on a local basis.

Channel(s)

The term "Channel(s)" denotes an electrical or photonic, in the case of fiber optic-based transmission systems, communications path between two or more points of termination.

Channel Service Unit

The term "Channel Service Unit" denotes equipment which performs one or more of the following functions: termination of a digital facility, regeneration of digital signals, detection and/or correction of signal format error, and remote loop back.

Channelize

The term "Channelize" denotes the process of multiplexing- demultiplexing wider bandwidth or higher speed channels into narrower band-width or lower speed channels.

Clear Channel Capability

The term "Clear Channel Capability" denotes the ability to transport twenty-four 64 Kbps over a DS1 Mbps High Capacity service via a B8ZS line code format.

C-Message Noise

The term "C-Message Noise" denotes the frequency weighted average noise within an idle voice channel. The frequency weighting, called C-message, is used to simulate the frequency characteristic of the 500-type telephone set and the hearing of the average subscriber.

ACCESS SERVICE

2. General Regulations (Cont'd)

2.6 Definitions (Cont'd)

C-Notched Noise

The term "C-Notched Noise" denotes the C-message frequency weighted noise on a voice channel with a holding tone, which is removed at the measuring end through a notch (very narrow band) filter.

Coin Station

See Pay Telephone.

Committed Information Rate (T)

The term “Committed Information Rate” denotes the transmission speed specified by the customer at which the Frame Relay Access Service network commits to transfer data between two ports. (T)

Common Line

The term "Common Line" denotes a line, trunk, pay telephone line or other facility provided under the general and/or local exchange service tariffs of the Telephone Company, terminated on a central office switch. A common line-residence is a line or trunk provided under the residence regulations of the general and/or local exchange service tariffs. A common line-business is a line provided under the business regulations of the general and/or local exchange service tariffs.

Common Channel Signaling

The term "Common Channel Signaling" (CCS) denotes a high speed packet switched communications network which is separate (out of band) from the public packet switched and message networks. Its purpose is to carry addressed signaling messages for individual trunk circuits and/or database related services between Signaling Points in the CCS network.

Communications System

The term "Communications System" denotes channels and other facilities which are capable of communications between terminal equipment provided by other than the Telephone Company.

Customer(s)

The term "Customer(s)" denotes any individual, partnership, association, joint-stock company, trust, corporation, or governmental entity or other entity which subscribes to the services offered under this tariff, including both Interexchange Carriers (ICs) and End Users.

ACCESS SERVICE

2. General Regulations (Cont'd)

2.6 Definitions (Cont'd)

Customer Designated Premises

The term "Customer Designated Premises" denotes the premises specified by the customer for the provision of Access Service.

Customer Node (N)

The term "Customer Node" denotes Telephone Company provided equipment located at a customer designated premises that terminates a high speed optical channel. (N)

Data Transmission (107 Type) Test Line

The term "Data Transmission (107 Type) Test Line" denotes an arrangement which provides for a connection to a signal source which provides test signals for one-way testing of data and voice transmission parameters.

Decibel

The term "Decibel" denotes a unit used to express relative difference in power, usually between acoustic or electric signals, equal to ten (10) times the common logarithm of the ratio of two signal powers.

Decibel Reference Noise C-Message Weighting

The term "Decibel Reference Noise C-Message Weighting" denotes noise power measurements with C-Message Weighting in decibels relative to a reference 1000 Hz tone of 90 dB below 1 milliwatt.

Decibel Reference Noise C-Message Referenced to O

The term "Decibel Reference Noise C-Message Referenced to O" denotes noise power in "Decibel Reference Noise C-Message Weighting" referred to or measured at a zero transmission level point.

Detail Billing

The term "Detail Billing" denotes the listing of each message and/or rate element for which charges to a customer are due on a bill prepared by the Telephone Company.

Certain material formerly found on this page now appears on Original Page 2-64.1

ACCESS SERVICE

2. General Regulations (Cont'd)

2.6 Definitions (Cont'd)

Digital Subscriber Line (DSL)

The term "Digital Subscriber Line (DSL)" denotes an access technology that allows simultaneous voice and high speed data to be sent over local exchange service facilities. (C)

Digital Subscriber Line (DSL) Access Service Connection Point

The term “Digital Subscriber Line (DSL) Access Service Connection Point” is a location designated by the Telephone Company that serves as an aggregation point for the collection of Telephone Company DSL traffic from multiple Digital Subscriber Line Access Multiplexers (DSLAMs) or comparable packet-mode data modem equipment.

Digital Switched 56 Service

A switched access optional feature available with Feature Group D Access, which provides for data transmission at up to 56 Kilobits per second.

Direct-Trunked Transport

The term "Direct-Trunked Transport" denotes transport from the serving wire center to the end office or from the serving wire center to the access tandem on circuits dedicated to the use of a single customer.

ACCESS SERVICE

2. General Regulations (Cont'd)

2.6 Definitions (Cont'd)

Directory Assistance (Interstate)

The term "Directory Assistance" denotes the provision of telephone numbers by a Telephone Company operator when the operator location is accessed by a customer by dialing NPA + 555-1212 or 555-1212.

Directory Assistance Location (Interstate)

The term "Directory Assistance Location" denotes a Telephone Company office where telephone company equipment first receives the Directory Assistance call from the customer's end user and selects the first operator position to respond to the Directory Assistance call.

Directory Number (DN)

Denotes a unique NPA-NXX-XXXX assigned to a subscriber of a Local Service Provider.

Downstream (N)

The term “Downstream” as used in the context of DSL is the transmission path from the Telephone Company’s Wholesale DSL Access Service Connection Point to the point of demarcation at the customer designated end user customer premises. (N)

Dual Tone Multifrequency Address Signaling

The term "Dual Tone Multifrequency Address Signaling" denotes a type of signaling that is an optional feature of Switched Access Feature Group A. It may be utilized when Feature Group A is being used in the terminating direction (from the point of termination with the customer to the local exchange end office). An office arranged for Dual Tone Multifrequency Signaling would expect to receive address signals from the customer in the form of Dual Tone Multifrequency signals.

Donor Switch

Denotes the original switch source of an NXX that has been designated as portable and from which a subscriber has moved their service, while retaining their Directory Number, to a different service provider’s switch.

Echo Control

The term "Echo Control" denotes the control of reflected signals in a telephone transmission path.

Certain material formerly found on this page now appears on Original Page 2-64.1

ACCESS SERVICE

2. General Regulations (Cont'd)

2.6 Definitions (Cont'd)

Echo Path Loss (M)

The term "Echo Path Loss" denotes the measure of reflected signal at a 4-wire point of interface without regard to the send and receive Transmission Level Point.

Echo Return Loss

The term "Echo Return Loss" denotes a frequency weighted measure of return loss over the middle of the voiceband (approximately 500 to 2500 Hz), where talker echo is most annoying. (M)

Effective 2-Wire

The term "Effective 2-Wire" denotes a condition which permits the simultaneous transmission in both directions over a channel, but it is not possible to insure independent information transmission in both directions. Effective 2-wire channels may be terminated with 2-wire or 4-wire interfaces.

Effective 4-Wire

The term "Effective 4-Wire" denotes a condition which permits the simultaneous independent transmission of information in both directions over a channel. The method of implementing effective 4- wire transmission is at the discretion of the Telephone Company (physical, time domain, frequency-domain separation or echo cancellation techniques). Effective 4-wire channels may be terminated with a 2-wire interface at the customer's premises. However, when terminated 2-wire, simultaneous independent transmission cannot be supported because the two wire interface combines the transmission paths into a single path.

End Office

The term "End Office" denotes a local Telephone Company switching system where Telephone Exchange Service customer station loops are terminated for purposes of interconnection to each other and to trunks. This term includes Remote Switching Modules/Systems served by a Host Central Office in a different wire center.

End User

The term "End User" means any customer of an interstate or foreign telecommunications service that is not a carrier, except that a carrier other than a telephone company shall be deemed to be an "end user" when such carrier uses a telecommunications service for administrative purposes, and a person or entity that offers telecommunications service exclusively as a reseller shall be deemed to be an "end user" if all resale transmissions offered by such reseller originate on the premises of such reseller.

Certain material currently found on this page formerly appeared on 1st Revised Page 2-65.

ACCESS SERVICE

2. General Regulations (Cont'd)

2.6 Definitions (Cont'd)

Enhanced Service

The term "Enhanced Service", as defined in Part 64 of the F.C.C.'s Rules and Regulations, are services "...offered over common carrier transmission facilities used in interstate communications, which employ computer processing applications that act on the format, content, code, protocol or similar aspects of the subscriber's transmitted information; provide the subscriber additional, different, or restructured information; or involve subscriber interaction with stored information."

Entrance Facility

The term "Entrance Facility" denotes a Switched Access Service dedicated Local Transport facility between the customer's serving wire center and the customer designated premises.

Entry Switch

See First Point of Switching.

Envelope Delay Distortion

The term "Envelope Delay Distortion" denotes a measure of the linearity of the phase versus frequency of a channel.

Equal Level Echo Path Loss

The term "Equal Level Echo Path Loss" (ELEPL) denotes the measure of Echo Path Loss (EPL) at a 4-wire interface which is corrected by the difference between the send and receive Transmission Level Point (TLP). [ELEPL = EPL - TLP (send) + TLP (receive)].

Ethernet (N)

Ethernet is a local area network (LAN) used for connecting computers, terminals, servers, etc. within the same building or office campus. Ethernet operates over twisted wire or coaxial cable at speeds up to ten million bits per second (10 Mbps). “Fast Ethernet” can operate at speeds up to 100 Mbps. In the LAN context, Ethernet is a physical link protocol reflecting the two lowest layers of the DNA/OS1 model. Ethernet LANs can generally connect to Asynchronous Transfer Mode (ATM) Cell Relay Service (CSR) networks at port speeds of 10 Mbps, 100 Mbps and one billion bits per second (1 Gigabit or “Gbps”). Standards for CPE connected to Telephone Company ATM-CRS ports are specified in Technical Reference IEEE Std. 802.3, Part 3, Clause 15 for 10BASE-F, Clause 26 for 100BASE-F and Clauses 34 through 38 for 1000BASE-X connections. (N)

Material previously appearing on this page now appears on Original Page 2-67.1.

ACCESS SERVICE

2. General Regulations (Cont'd)

2.6 Definitions (Cont'd)

Exchange (M)

The term "Exchange" denotes a unit generally smaller than a local access and transport area, established by the Telephone Company for the administration of communications service in a specified area which usually embraces a city, town or village and its environs. It consists of one or more central offices together with the associated facilities used in furnishing communications service within that area. The exchange includes any Extended Area Service area that is an enlargement of a Telephone Company's exchange area to include nearby exchanges. One or more designated exchanges comprise a given local access and transport area.

Exit Message

The term "Exit Message" denotes an SS7 message sent to an end office by the Telephone Company's tandem switch to mark the Carrier Connect Time when the Telephone Company's tandem switch sends an Initial Address Message to an interexchange customer. (M)

Material currently found on this page previously appeared on 1st Revised Page 2-67.

ACCESS SERVICE

2. General Regulations (Cont'd)

2.6 Definitions (Cont'd)

Expected Measured Loss

The term "Expected Measured Loss" denotes a calculated loss which specifies the end-to-end 1004-Hz loss on a terminated test connection between two readily accessible manual or remote test points. It is the sum of the inserted connection loss and test access loss including any test pads.

Extended Area Service

See Exchange.

Extended PVC

The term “Extended PVC” denotes the interconnection of a port on a telephone company’s frame relay switch with a port on another interconnected telephone company’s frame relay switch.

First Point of Switching

The term "First Point of Switching" denotes the first Telephone Company or centralized equal access provider location at which switching occurs on the terminating path of a call proceeding from the customer designated premises to the terminating end office and, at the same time, the last Telephone Company or centralized equal access provider location at which switching occurs on the originating path of a call proceeding from the originating end office to the customer designated premises.

Frame

The term “Frame” denotes a group of data bits in a specific format, which enables network equipment to recognize the meaning and purpose of the specific bits.

Frame Relay Access Connection (FRAC) (N)

The Term "Frame Relay Access Connection (FRAC)” denotes the physical facility, including the associated port, between the end user's data terminal equipment and the Telephone Company's frame relay switch. (N)

Frame Relay Access Customer Port

The term “Frame Relay Access Customer Port” denotes the physical location in the telephone company switching offices where the access customer’s special access facility connects to the telephone company’s Frame Relay Access Service network. It specifies how a frame relay switch sends and receives data from a frame relay access customer’s network.

ACCESS SERVICE

2. General Regulations (Cont'd)

2.6 Definitions (Cont'd)

Frame Relay Access Service

The term “Frame Relay Access Service” denotes a medium-speed, connection-oriented packet-switched data service that allows for the interconnection of Local Area Networks or other compatible end user customer premises equipment for the purpose of connecting to an access customer’s interstate network.

Frame Relay End User Port

The term “Frame Relay End User Port” denotes the physical location in the telephone company switching office where the special access facility of the customer connects to the Frame Relay Access Service Network. It receives the data frame from the end user customer’s Local Area Network or other compatible CPE devices and verifies that the end user connection and the corresponding access customer connection are valid before relaying the frame to the destination end point.

Frame Relay Inter-network Connection (FRIC) (N)

The term "Frame Relay Inter-network Connection (FRIC)” denotes the physical facility, including the associated port, between the access customer's frame relay network and the Telephone Company's frame relay switch.

Frame Relay Inter-network Customer Port

The term "Frame Relay Inter-network Customer Port" denotes the physical location in the Telephone Company switching office where the access customer’s Special Access facility connects to the Telephone Company’s Frame Relay Access Service network. It specifies how a frame relay switch sends and receives data from a frame relay access customer’s network. (N)

Frequency Shift

The term "Frequency Shift" denotes the change in the frequency of a tone as it is transmitted over a channel.

Grandfathered

The term "Grandfathered" denotes Terminal Equipment, Multiline Terminating Systems and Protective Circuitry directly connected to the facilities utilized to provide services under the provisions of this tariff, and which are considered grandfathered under Part 68 of the F.C.C.'s Rules and Regulations.)

Host Central Office

The term "Host Central Office" denotes an electronic local Telephone Company End Office where Telephone Exchange Service customer station loops are terminated for purposes of interconnection to each other and to trunks. Additionally, this type of End Office contains the central call processing functions which service itself and its Remote Switching Modules/Systems.

Certain material formerly found on this page now appears on 1st Revised Page 2-69

ACCESS SERVICE

2. General Regulations (Cont'd)

2.6 Definitions (Cont'd)

Hub (M)

A wire center at which bridging or multiplexing functions are performed for customers served out of any wire center. (M)

Immediately Available Funds

The term "Immediately Available Funds" denotes a corporate or personal check drawn on a bank account and funds which are available for use by the receiving party on the same day on which they are received and include U.S. Federal Reserve bank wire transfers, U.S. Federal Reserve notes (paper cash), U.S. coins, U.S. Postal Money Orders and New York Certificates of Deposit.

Impedance Balance

The term "Impedance Balance" denotes the method of expressing Echo Return Loss and Singing Return Loss at a 4-wire interface whereby the gains and/or loss of the 4-wire portion of the transmission path, including the hybrid, are not included in the specification.

Impulse Noise

The term "Impulse Noise" denotes any momentary occurrence of the noise on a channel over a specified level threshold. It is evaluated by counting the number of occurrences which exceed the threshold.

Individual Case Basis

The term "Individual Case Basis" denotes a condition in which the regulations, if applicable, rates and charges for an offering under the provisions of this tariff are developed based on the circumstances in each case.

Initial Address Message

The term "Initial Address Message" denotes an SS7 message sent in the forward direction to initiate trunk set up, reserve an outgoing trunk and process the information about that trunk along with other data relating to the routing and handling of the call to the next switch.

Inserted Connection Loss

The term "Inserted Connection Loss" denotes the 1004 Hz power difference (in dB) between the maximum power available at the originating end and the actual power reaching the terminating end through the inserted connection.

Certain material currently found on this page formerly appeared on Original Page 2-68.1.

ACCESS SERVICE

2. General Regulations (Cont'd)

2.6 Definitions (Cont'd)

Installation and Repair Technician

The term "Installation and Repair Technician" denotes a Telephone Company employee who performs installation and/or repair work, including testing and trouble isolation, outside of the Telephone Company Central Office and generally at the customer designated premises.

Interexchange Carrier (IC) or Interexchange Common Carrier

The terms "Interexchange Carrier" (IC) or "Interexchange Common Carrier" denotes any individual, partnership, association, joint- stock company, trust, governmental entity or corporation engaged for hire in interstate or foreign communication by wire or radio, between two or more exchanges.

Intermediate Hub

A wire center at which bridging or multiplexing functions are performed only for customers served by that wire center and wire centers that subtend the hub, as specified in (x)
NATIONAL EXCHANGE CARRIER ASSOCIATION, INC. TARIFF F.C.C. NO. 4. (x)

Intermodulation Distortion

The term "Intermodulation Distortion" denotes a measure of the nonlinearity of a channel. It is measured using four tones, and evaluating the ratios (in dB) of the transmitted composite four-tone signal power to the second-order products of the tones (R2), and the third-order products of the tones (R3).

Interstate Communications

The term "Interstate Communications" denotes both interstate and foreign communications.

Intrastate Communications

The term "Intrastate Communications" denotes any communications within a state subject to oversight by a state regulatory commission as provided by the laws of the state involved.

(x) Filed under authority of Special Permission No. 93-598 of the Federal Communications Commission.

ACCESS SERVICE

2. General Regulations (Cont'd)

2.6 Definitions (Cont'd)

Legal Holiday

The term "Legal Holiday" denotes days other than Saturday or Sunday for which the Telephone Company is normally closed. These include New Year's Day, Independence Day, Thanksgiving Day, Christmas Day and a day when Washington's Birthday, Memorial Day or Columbus Day is legally observed and other locally observed holidays when the Telephone Company is closed.

Line Side Connection

The term "Line Side Connection" denotes a connection of a transmission path to the line side of a local exchange switching system.

Local Access and Transport Area (LATA)

The term "Local Access and Transport Area" denotes a geographic area established for the provision and administration of communications service. It encompasses one or more designated exchanges, which are grouped to serve common social, economic and other purposes.

Local Area Network

The term “Local Area Network” denotes a network permitting the interconnection and intercommunication of a group of computers.

Local Number Portability (LNP) (N)

The term "Local Number Portability (LNP)" denotes the ability of an end user of local exchange telecommunications service to retain an existing telephone number without impairment of quality, reliability, or convenience when switching from one local exchange telecommunications carrier to another. (N)

Location Routing Number (LRN) (T)

The term "Location Routing Number (LRN)" denotes a unique NPA-NXX-XXXX that serves as a routing number associated with a central office switch that has subscribers that have transferred their telephone numbers from one local exchange telecommunications carrier to another. (C) (C)

Certain material formerly found on this page now appears on Original Page 2-71.1

ACCESS SERVICE

2. General Regulations (Cont'd)

2.6 Definitions (Cont'd)

Loss Deviation (M)

The term "Loss Deviation" denotes the variation of the actual loss from the designed value.

Major Fraction Thereof

The term "Major Fraction Thereof" denotes any period of time in excess of 1/2 of the stated amount of time. As an example, in considering a period of 24 hours, a major fraction thereof would be any period of time in excess of 12 hours exactly. Therefore, if a given service is interrupted for a period of thirty-six hours and fifteen minutes, the customer would be given a credit allowance for two twenty-four hour periods for a total of forty eight hours.

Message (M)

The term "Message" denotes a "call" as defined preceding.

Certain material currently found on this page formerly appeared on 2nd Revised Page 2-71.

ACCESS SERVICE

2. General Regulations (Cont'd)

2.6 Definitions (Cont'd)

N-1 Carrier

The term "N-1 Carrier" denotes the telecommunications carrier, prior to the terminating carrier, responsible for querying an LNP database to determine the routing of a call for a number portable NXX code.

Network Control Signaling

The term "Network Control Signaling" denotes the transmission of signals used in the telecommunications system which perform functions such as supervision (control, status, and charge signals), address signaling (e.g., dialing), calling and called number identifications, rate of flow, service selection error control and audible tone signals (call progress signals indicating re-order or busy conditions, alerting, coin denominations, coin collect and coin return tones) to control the operation of the telecommunications system.

Nonpublished Number (N)

A nonpublished number is a number omitted from both the published telephone directory and directory assistance records at the request of the customer. A nonpublished number is not available through directory assistance. (N)

Nonsynchronous Test Line

The term "Nonsynchronous Test Line" denotes an arrangement in step- by-step end offices which provides operational tests which are not as complete as those provided by the synchronous test lines, but can be made more rapidly.

North American Numbering Plan

The term "North American Numbering Plan" denotes a three-digit area code (Numbering Plan Area - NPA) and a seven-digit telephone number made up of a three-digit Central Office prefix plus a four-digit station number.

Off-hook

The term "Off-hook" denotes the active condition of Switched Access or a Telephone Exchange Service line.

On-hook

The term "On-hook" denotes the idle condition of Switched Access or a Telephone Exchange Service line.

Certain material formerly found on this page now appears on 1st Revised Page 2-71.1.

ACCESS SERVICE

2. General Regulations (Cont'd)

2.6 Definitions (Cont'd)

Open Circuit Test Line

The term "Open Circuit Test Line" denotes an arrangement in an end office which provides an ac open circuit termination of a trunk or line by means of an inductor of several Henries.

Optical Carrier Channel (N)

The term "Optical Carrier Channel" denotes the high speed optical communications path for transporting information utilizing a Synchronous Optical Channel platform. The channel is provided at transmission rates of 155.52 Mbps (OC3) and 622.08 Mbps (OC12).

Optical Carrier Rate (OC-N)

The term "Optical Carrier Rate" denotes the line rate being transmitted on an optical carrier channel. A SONET transmission rate is equivalent to "N" times the OC1 line rate of 51.84 Mbps.

Optical Carrier Rate Concatenated

The term "Optical Carrier Rate Concatenated" denotes the transmission of a combined signal formed by linking together multiple individual signals.

Optical Line Termination

The term "Optical Line Termination" denotes the network interface on the customer designated premises equipment that provides for an optical handoff. (N)

Originating Direction

The term "Originating Direction" denotes the use of access service for the origination of calls from an End User Premises to an IC Premises.

Pay Telephone

The term "Pay Telephone" denotes a coin or coinless instrument provided in a public or semipublic place where Payphone Service Provider customers can originate telephonic communications and pay the applicable charges by (1) inserting coins into the equipment, or (2) using a credit card, or (3) third party billing the call or (4) calling collect.

Certain material previously found on this page can now be found on Original Page 2-73.1.

ACCESS SERVICE

2. General Regulations (Cont'd)

2.6 Definitions (Cont'd)

Payphone Service Provider (M)

The term “Payphone Service Provider” denotes any entity that provides pay telephone service, which is the provision of public, semi-public or inmate pay telephone service.

Permanent Virtual Connection (PVC)

The term “PVC” denotes a software defined communications path between two port connections within the Frame Relay Access Service network.

Phase Jitter

The term "Phase Jitter" denotes the unwanted phase variations of a signal.

Point of Termination

The term "Point of Termination" denotes the point of demarcation within a customer-designated premises at which the Telephone Company's responsibility for the provision of Access Service ends. (M)

Material currently found on this page formerly appeared on 2nd Revised Page 2-73.

2. General Regulations (Cont'd)

2.6 Definitions (Cont'd)

Prearranged Query (N)

A Company will order SPNP query service to perform queries that company will be responsible for performing prior to delivering any traffic to the incumbent local Telephone Company. (N)

Premises (M)

The term "Premises" denotes a building or buildings on continuous property (except Railroad Right-of-Way, etc.) not separated by a public highway. (M)

Query Default (N)

In SPNP Query Service, a signaling message requesting the Local Routing Number (LRN) contained in the LNP Data Base for which a query has not yet been performed by the N-1 Carrier and where the N-1 carrier has not prearranged with the Telephone Company to have the queries performed on the N-1 carrier's behalf.

Recipient Switch

Denotes any end office switch that serves Directory Numbers (DN) within a number portable NXX that is not originally assigned to the switch. Customers assigned a DN within indicated NXX that were working out of a switch other than the one originally designated are said to have ported their number to this recipient switch.

Regional Service Management System/Number Portability Administration Center
Denotes the third party administered database which maintains the information on all ported numbers in the Telephone Company's region. (N)

Release Message

The term "Release Message" denotes an SS7 message sent in either direction to indicate that a specific circuit is being released.

Remote Switching Modules/Systems

The term "Remote Switching Modules/Systems" denotes small, remotely controlled electronic end office switches which obtain their call processing capability from an electronic Host Central Office. The Remote Switching Modules/Systems cannot accommodate direct trunks to an IC.

Certain material currently found on this page formerly appeared on 1st Revised Page 2-73

ACCESS SERVICE

2. General Regulations (Cont'd)

2.6 Definitions (Cont'd)

Return Loss (M)

The term "Return Loss" denotes a measure of the similarity between the two impedances at the junction of two transmission paths. The higher the return loss, the higher the similarity.

Registered Equipment

The term "Registered Equipment" denotes the customer's premises equipment which complies with and has been approved within the Registration Provisions of Part 68 of the F.C.C.'s Rules and Regulations. (M)

Service Access Code

The term "Service Access Code" denotes a 3 digit code in the NPA format which is used as the first three digits of a 10 digit address and which is assigned for special network uses. Whereas NPA codes are normally used for identifying specific geographical areas, certain Service Access Codes have been allocated in the North American Numbering Plan to identify generic services or to provide access capability. Examples of Service Access Codes include the 800 and 900 codes.

Service Switching Point (SSP)

A Service Switching Point denotes an end office or tandem which, in addition to having SS7 and SP capabilities, is also equipped to query centralized data bases.

Serving Wire Center

The term "Serving Wire Center" denotes the wire center from which the customer designated premises would normally obtain dial tone from the Telephone Company.

Seven Digit Manual Test Line

The term "Seven Digit Manual Test Line" denotes an arrangement which allows the Customer to select balance, milliwatt and synchronous test lines by manually dialing a seven digit number over the associated access connection.

Shortage of Facilities or Equipment

The term "Shortage of Facilities or Equipment" denotes a condition which occurs when the Telephone Company does not have appropriate cable, switching capacity, bridging or, multiplexing equipment, etc., necessary to provide the Access Service requested by the customer.

Short Circuit Test Line

The term "Short Circuit Test Line" denotes an arrangement in an end office which provides for an ac short circuit termination of a trunk or line by means of a capacitor of at least four microfarads.

Certain material currently found on this page formerly appeared on 1st Revised Page 2-74.

ACCESS SERVICE

2. General Regulations (Cont'd)

2.6 Definitions (Cont'd)

Signal-to-C-Notched Noise Ratio (M)

The term "Signal-to-C-Notched Noise Ratio" denotes the ratio in dB of a test signal to the corresponding C-Notched Noise.

Signaling Point (SP)

The term "Signaling Point (SP)" denotes an SS7 network interface element capable of originating and terminating SS7 trunk signaling messages. (M)

Signaling Point of Interface (SPOI)

The term “Signaling Point of Interface (SPOI)” denotes the customer designated location where the SS7 signaling information is exchanged between the Telephone Company and the customer.

Signaling System 7 (SS7)

The term "Signaling System 7 (SS7)" denotes the layered protocol used for standardized ommon channel signaling in the United States and Puerto Rico.

Signal Transfer Point (STP)

The term "Signal Transfer Point (STP)" denotes a packet switch which provides access to the Telephone Company's SS7 network and performs SS7 message signal routing and screening.

Signal Transfer Point (STP) Port

The term "Signal Transfer Point (STP) Port" denotes the point of termination and interconnection to the STP.

Signaling Return Loss

The term "Signaling Return Loss" denotes the frequency weighted measure of return loss at the edges of the voiceband (200 to 500 Hz and 2500 to 3200 Hz), where singing (instability) problems are most likely to occur.

Special Order

The term "Special Order" denotes an order for a Directory Assistance Service.

Standard PVC

The term “Standard PVC” denotes the interconnection of ports on the same frame relay switch.

Certain material currently found on this page formerly appeared on 2nd Revised Page 2-75

ACCESS SERVICE

2. General Regulations (Cont'd)

2.6 Definitions (Cont'd)

Study Area

The term "Study Area" denotes a geographic area within a state in which a Telephone Company operates. This geographic area normally does not cross state lines.

Subtending End Office of an Access Tandem

The term "Subtending End Office of an Access Tandem" denotes an end office that has final trunk group routing through that tandem.

Super Intermediate Hub

A wire center at which bridging or multiplexing functions are performed for Customers served by all wire centers in the LATA. A Super Intermediate Hub can be restricted to one or more designated NPAs within a LATA and/or to wire centers that are owned by the same telephone company as the hub.

Symmetrical Digital Subscriber Line (SDSL)

The term “Symmetrical Digital Subscriber Line (SDSL)” denotes an access technology that allows high speed data to be sent over local exchange service facilities. SDSL supports the transmission of data signals at the same speed when receiving data (downstream rate) and transmitting data (upstream rate). (C)

Synchronous Optical Network (SONET)

The term "SONET" denotes a North American Standard for high speed synchronous optical channels having minimum transmission rates of 51.84 Mbps. The standard SONET optical carrier rate of 51.84 Mbps. is called OC1; the equivalent electrical signal rate is called STS-1. SONET standardizes higher transmission bit rates, "OCN", as exact multiples of OC1 (N X 51.84 Mbps.). For example, OC3 equals 3 X 51.84 Mbps.

Synchronous Test Line

The term "Synchronous Test Line" denotes an arrangement in an end office which performs marginal operational tests of supervisory and ring-tripping functions.

Synchronous Transport Signal (STS)

The term "Synchronous Transport Signal" denotes a 51.84 Mbps. electrical signal used within the SONET optical carrier network. The signal consists of the information content and the overhead used by SONET. The overhead is used for controlling, framing and maintaining the STS signal so it can be directly connected to other SONET carrier channels. STS signals are in exact multiples of 51.84 Mbps. (STS-1 is 51.84 Mbps., STS-3 is 155.52 Mbps., etc.).

ACCESS SERVICE

2. General Regulations (Cont'd)

2.6 Definitions (Cont'd)

Tandem Switched Transport (M)

The term "Tandem Switched Transport" denotes transport from the serving wire center to the end office, or from the tandem to the end office, that is switched at a tandem.

Terminating Direction

The term "Terminating Direction" denotes the use of Access Service for the completion of calls from an IC premises to an End User Premises.

Terminus Hub

A wire center at which bridging or multiplexing functions are performed only for Customers served directly by the same wire center.

Throughput

The term “Throughput” denotes the number of data bits successfully transferred in one direction per unit of time.

Transmission Measuring (105 Type) Test Line/Responder

The term "Transmission Measuring (105 Type) Test Line/Responder" denotes an arrangement in an end office which provides far-end access to a responder and permits two-way loss and noise measurements to be made on trunks from a near end office.

Transmission Path

The term "Transmission Path" denotes an electrical path capable of transmitting signals within the range of the service offering, e.g., a voice grade transmission path is capable of transmitting voice frequencies within the approximate range of 300 to 3000 Hz. A transmission path is comprised of physical or derived facilities consisting of any form or configuration of plant typically used in the telecommunications industry. (M)

Material currently found on this page formerly appeared on 4th Revised Page 2-77 and 2nd Revised Page 2-78.

ACCESS SERVICE

2. General Regulations (Cont'd)

2.6 Definitions (Cont'd)

Trunk

The term "Trunk" denotes a communications path connecting two switching systems in a network, used in the establishment of an end-to-end connection.

Trunk Group

The term "Trunk Group" denotes a set of trunks which are traffic engineered as a unit for the establishment of connections between switching systems in which all of the communications paths are interchangeable.

Trunk Side Connection

The term "Trunk Side Connection" denotes the connection of a transmission path to the trunk side of a local exchange switching system.

Two-Wire to Four-Wire Conversion

The term "Two-Wire to Four-Wire Conversion" denotes an arrangement which converts a four-wire transmission path to a two-wire transmission path to allow a four-wire facility to terminate in a two-wire entity (e.g., a central office switch).

Unlisted Number (N)

An unlisted number is a listing omitted from the published telephone directory at the request of the customer. A number that is unlisted rather than nonpublished remains available for directory assistance. (N)

Upstream

The term “Upstream” as used in the context of DSL Access Service is the transmission path from the point of demarcation at the customer designated end user premises to the DSL Access Service Connection Point.

V and H Coordinates Method

The term "V and H Coordinates Method" denotes a method of computing airline miles between two points by utilizing an established formula which is based on the vertical and horizontal coordinates of the two points.

WATS Serving Office

The term "WATS Serving Office" denotes a Telephone Company designated serving wire center where switching, screening and/or recording functions are performed in connection with the closed-end of WATS or WATS-type services.

Wireless Switching Center

The term “Wireless Switching Center” (WSC) denotes a Wireless Service Provider (WSP) switching system that is used to terminate wireless stations for purposes of interconnection to each other and to trunks interfacing with the public switched network.

ACCESS SERVICE

2. General Regulations (Cont'd)

2.6 Definitions (Cont'd)

Wire Center (M)

The term "Wire Center" denotes a building in which one or more central offices, used for the provision of Telephone Exchange Services, are located. (M)

Certain material currently found on this page formerly appeared on 1st Revised Page 2-78.

ACCESS SERVICE

3. Carrier Common Line Access Service and Federal Universal Service Charge (T)

The Telephone Company will provide Carrier Common Line Access Service (Carrier Common Line Access) to customers in conjunction with Switched Access Service provided in Section 6 of this tariff or the appropriate Switched Access Service section of other Access Service tariffs.

3.1 General Description

Carrier Common Line Access provides for the use of end users' Telephone Company provided common lines by customers for access to such end users to furnish Interstate Communications.

Premium Access is (1) Switched Access Service provided to customers under this tariff which furnish interstate MTS/WATS, and (2) Switched Access Service in an end office converted to equal access.

Non-Premium Access is Switched Access Service provided in an end office not yet converted to equal access to customers that do not furnish interstate MTS/WATS.

A Special Access Surcharge, as set forth in 17.3.1 following, will apply to interstate special access service provided by the Telephone Company to a customer, in accordance with regulations as set forth in 7.3 following.

ACCESS SERVICE

3. Carrier Common Line Access Service and Federal Universal Service Charge (Cont'd) (T)

3.2 Limitations

3.2.1 Exclusions

Neither a telephone number nor detail billing are provided with Carrier Common Line Access. Additionally, directory listings and intercept arrangements are not included in the rates and charges for Carrier Common Line Access.

3.2.2 Access Groups

All line side connections provided in the same access group will be limited to the same features and operating characteristics.

All trunk side connections provided in the same access group will be limited to the same features and operating characteristics.

3.2.3 WATS Access Lines

Where Switched Access Services are connected with Special Access Services at Telephone Company Designated WATS Serving Offices for the provision of WATS or WATS-type Services, Switched Access Service minutes which are carried on that end of the service (i.e., originating minutes for outward WATS and WATS-type services and terminating minutes for inward WATS and WATS-type services) shall not be assessed Carrier Common Line Access per minute charges with the following exception. Carrier Common Line Access per minute charges shall apply when Feature Group A or Feature Group B switched access is ordered from a non-equal access telephone company office that does not have measurement capabilities and the assumed average access minutes, as set forth in the exchange carrier's access tariff, are used.

ACCESS SERVICE

3. Carrier Common Line Access Service and Federal Universal Service Charge (Cont'd) (T)

3.3 Undertaking of the Telephone Company

3.3.1 Provision of Service

Where the customer is provided Switched Access Service under other sections of this or other Access Service tariffs, the Telephone Company will provide the use of Telephone Company common lines by a customer for access to end users at rates and charges as set forth in 17.1.1 following.

3.3.2 Interstate and Intrastate Use

The Switched Access Service provided by the Telephone Company includes the Switched Access Service provided for both interstate and intrastate communications. The Carrier Common Line Access rates and charges as set forth in 17.1.1 following apply to interstate Switched Access Service access minutes in accordance with the rate regulations as set forth in 3.8.4 following (Percent Interstate Use - PIU).

3.4 Obligations of the Customer

3.4.1 Switched Access Service Requirement

The Switched Access Service associated with Carrier Common Line Access shall be ordered by the customer under other sections of this tariff.

3.4.2 Supervision

The customer facilities at the premises of the ordering customer shall provide the necessary on-hook and off-hook supervision.

ACCESS SERVICE

3. Carrier Common Line Access Service and Federal Universal Service Charge (Cont'd) (T)

3.5 Determination of Usage Subject to Carrier Common Line Access Charges

Except as set forth herein, all Switched Access Service provided to the customer will be subject to Carrier Common Line Access charges.

3.5.1 Determination of Jurisdiction

When the customer reports interstate and intrastate use of Switched Access Service, the associated Carrier Common Line Access used by the customer for interstate will be determined as set forth in 3.8.4 following (Percent Interstate Use-PIU).

3.5.2 Cases Involving Usage Recording By the Customer

Where Feature Group C end office switching is provided without Telephone Company recording and the customer records minutes of use used to determine Carrier Common Line Access charges (i.e., Feature Group C operator and calls such as pay telephone sent-paid, operator-DDD, operator-person, collect, credit-card, third number and/or other like calls), the customer shall furnish such minutes of use detail to the Telephone Company in a timely manner. If the customer does not furnish the data, the customer shall identify all Switched Access Services which could carry such calls in order for the Telephone Company to accumulate the minutes of use through the use of special Telephone Company measuring and recording equipment.

ACCESS SERVICE

3. Carrier Common Line Access Service and Federal Universal Service Charge (Cont'd) (T)

3.5 Determination of Usage Subject to Carrier Common Line Access Charges (Cont'd)

3.5.3 Local Exchange Access and Enhanced Services Exemption

When access to the local exchange is required to provide a customer service (e.g., MTS/WATS-type, telex, Data, etc.) that uses a resold special access service, Switched Access Service Rates and Regulations, as set forth in Section 6. following will apply, except when such access to the local exchange is required for the provision of an enhanced service. Carrier Common Line Access rates and charges as set forth in 17.1.1 following apply in accordance with the resale rate regulations as set forth in 3.6.4 following.

3.6 Resold Services

3.6.1 Scope

Where the customer is reselling MTS and/or MTS-type service(s) on which the Carrier Common Line and Switched Access charges have been assessed, the customer may, at the option of the customer, obtain Feature Group A, Feature Group B or Feature Group D Switched Access Service under this tariff as set forth in Section 6. following for originating and/or terminating access in the local exchange. Such access group arrangements whether single lines or trunks or multiline hunt groups or trunk groups will have Carrier Common Line Access charges applied as set forth in 17.1.1 following in accordance with the resale rate regulations set forth in 3.6.4 following. For purposes of administering this provision:

Resold interstate terminating MTS and MTS-type service(s) shall include collect calls, third number calls and credit card calls where the reseller pays the underlying carrier's service charges; and shall not include intrastate minutes of use.

Resold interstate originating MTS and MTS-type service(s) shall not include collect, third number, credit card or intrastate minutes of use.

ACCESS SERVICE

3. Carrier Common Line Access Service and Federal Universal Service Charge (Cont'd) (T)

3.6 Resold Services (Cont'd)

3.6.2 Customer Obligations Concerning the Resale of MTS and MTS-type Services

When the customer is reselling MTS and/or MTS-type service as set forth in 3.6.1 preceding, the customer will be charged Carrier Common Line Access charges in accordance with the resale rate regulations as set forth in 3.6.4 following if the customer or the provider of the MTS service furnishes documentation of the MTS usage and/or the customer furnishes documentation of the MTS- type usage. Such documentation supplied by the customer shall be supplied each month and shall identify the involved resold MTS and/or MTS-type services.

The monthly period used to determine the minutes of use for resold MTS and/or MTS-type service(s) shall be the most recent monthly period for which the customer has received a bill for such resold service(s). This information shall be delivered to the Telephone Company, at a location specified by the Telephone Company, no later than 15 days after the bill date shown on the resold MTS and/or MTS-type service bill. If the required information is not received by the Telephone Company, the previously reported information, as described preceding, will be used for the next two months. For any subsequent month, no allocation or credit will be made until the required documentation is delivered to the Telephone Company by the customer.

ACCESS SERVICE

3. Carrier Common Line Access Service and Federal Universal Service Charge (Cont'd) (T)

3.6 Resold Services (Cont'd)

3.6.3 Resale Documentation Provided By the Customer

When the customer utilizes Switched Access Service as set forth in 3.6.2 preceding, the Telephone Company may request a certified copy of the customer's resold MTS or MTS-type usage billing from either the customer or the provider of the MTS or MTS-type service. Requests for billing will relate back no more than 12 months prior to the current billing period.

ACCESS SERVICE

3. Carrier Common Line Access Service and Federal Universal Service Charge (Cont'd) (T)

3.6 Resold Services (Cont'd)

3.6.4 Rate Regulations Concerning the Resale of MTS and MTS-type Services

When the customer is provided an access group to be used in conjunction with the resale of MTS and/or MTS-type services as set forth in 3.6.1 preceding, subject to the limitations as set forth in 3.2 preceding, and the billing entity receives the usage information required as set forth in 3.6.2 preceding, to calculate the adjustment of Carrier Common Line Access charges, the customer will be billed as set forth in (D), (E) or (F) following, depending upon, respectively, whether the usage is from non-equal access offices, equal access offices or a combination of the two.

(A) Apportionment and Adjustment of Resold Minutes of Use

When the customer is provided with more than one access group in a LATA in association with the resale of MTS and/or MTS-type services, the resold minutes of use will be apportioned as follows:

(1) Originating Services

The Telephone Company will apportion the resold originating MTS and/or MTS-type services and originating minutes of use for which the resale credit adjustment applies, among the access groups. Such apportionment will be based on the relationship of the originating usage for each access group to the total originating usage for all access groups in the LATA. For purposes of administering this provision:

ACCESS SERVICE

3. Carrier Common Line Access Service and Federal Universal Service Charge (Cont'd) (T)

3.6 Resold Services (Cont'd)

3.6.4 Rate Regulations Concerning the Resale of MTS and MTS- type Services (Cont'd)

(A) Apportionment and Adjustment of Resold Minutes of Use (Cont'd)

(1) Originating Services (Cont'd)

Resold originating MTS and/or MTS-type services minutes shall be only those attributable to interstate originating MTS and/or MTS-type minutes and shall not include collect, third number, credit card or intrastate minutes of use.

The resale credit adjustment shall apply for resold originating MTS and MTS-type services and minutes of use, provided Carrier Common Line and Switched Access Charges have been assessed on such services.

(2) Terminating Services

The Telephone Company will apportion the resold terminating MTS and/or MTS-type services and terminating minutes of use for which the resale credit adjustment applies, among the access groups. Such apportionment will be based on the relationship of the terminating usage for each access group to the total terminating usage for all access groups in the LATA. For purposes of administering this provision:

> Resold terminating MTS and/or MTS-type services minutes shall be only those attributable to interstate terminating MTS/MTS-type (i.e., collect calls, third number calls, and credit card calls) and shall not include intrastate minutes of use or MTS/MTS-type minutes of use paid for by another party.

The resale credit adjustment shall apply for resold terminating MTS and MTS-type services and minutes of use, provided Carrier Common Line and Switched Access Charges have been assessed on such services.

ACCESS SERVICE

3. Carrier Common Line Access Service and Federal Universal Service Charge (Cont'd) (T)

3.6 Resold Services (Cont'd)

3.6.4 Rate Regulations Concerning the Resale of MTS and MTS- type Services (Cont'd)

(B) Same State/Telephone Company/Exchange Limitation

In order for the rate regulations to apply as set forth in (D), (E) or (F) following, the access groups and the resold MTS and/or MTS-type services must be provided in the same state (except when the same extended area service arrangement is provided in two different states by the same telephone company) in the same exchange, provided by the same Telephone Company and connected directly or indirectly. For those exchanges that encompass more than one state, the customer shall report the information by state within the exchange.

ACCESS SERVICE

3. Carrier Common Line Access Service and Federal Universal Service Charge (Cont'd) (T)

3.6 Resold Services (Cont'd)

3.6.4 Rate Regulations Concerning the Resale of MTS and MTS- type Services (Cont'd)

(C) Direct and Indirect Connections

Each of the access group arrangements used by the customer in association with the resold MTS and/or MTS-type services must be connected either directly or indirectly to the customer designated premises at which the resold MTS and/or MTS-type services are terminated. Direct connections are those arrangements where the access groups and resold MTS and/or MTS-type services are terminated at the same customer designated premises.

Indirect originating connections are those arrangements where the access groups and the resold originating MTS and/or MTS-type services are physically located at different customer designated premises in the same exchange. Such different customer designated premises are connected by facilities that permit a call to flow from access groups to resold MTS and/or MTS-type services.

Indirect terminating connections are those arrangements where the access groups and resold terminating MTS and/or MTS-type services are physically located at different customer designated premises in the same exchange. Such different customer designated premises are connected by facilities that permit a call to flow from resold terminating MTS and/or MTS-type services to access groups.

ACCESS SERVICE

3. Carrier Common Line Access Service and Federal Universal Service Charge (Cont'd) (T)

3.6 Resold Services (Cont'd)

3.6.4 Rate Regulations Concerning the Resale of MTS and MTS- type Services (Cont'd)

(D) Access Groups - Non Equal Access Offices Only

The adjustments as set forth here and in (E) and (F) following will be computed separately for each access group.

When all the usage on an access group originates from and/or terminates at end offices that have not been converted to equal access the Non-Premium Access Charge per minute as set forth in 17.1.1 following will apply. The Access Minutes which will be subject to Carrier Common Line Access charges will be the adjusted originating interstate access minutes plus the adjusted terminating interstate access minutes for such access groups.

The adjusted originating access minutes will be the originating interstate access minutes less the reported resold originating MTS and/or MTS-type service minutes of use as set forth (A)(1) preceding; but not less than zero. The adjusted terminating access minutes will be the terminating interstate access minutes less the reported resold terminating MTS and/or MTS-type service minutes of use as set forth in (A)(2) preceding; but not less than zero.

ACCESS SERVICE

3. Carrier Common Line Access Service and Federal Universal Service Charge (Cont'd) (T)

3.6 Resold Services (Cont'd)

3.6.4 Rate Regulations Concerning the Resale of MTS and MTS- type Services (Cont'd)

(E) Access Groups - Equal Access Offices Only

When all the usage on an access group originates from and/or terminates at end offices that have been converted to equal access the Premium Access Charge per minute as set forth in 17.1.1 following will apply. The minutes billed Carrier Common Line Access Service charges will be the adjusted originating interstate access minutes and the adjusted terminating interstate access minutes for such access groups.

The adjusted originating access minutes will be the originating interstate access minutes less the reported resold originating MTS and/or MTS-type service minutes of use as set forth in (A)(1) preceding; but not less than zero. The adjusted terminating access minutes will be the terminating interstate access minutes less the reported resold terminating MTS and/or MTS-type service minutes of use as set forth in (A)(2) preceding; but not less than zero.

ACCESS SERVICE

3. Carrier Common Line Access Service and Federal Universal Service Charge (Cont'd) (T)

3.6 Resold Services (Cont'd)

3.6.4 Rate Regulations for the Resale of MTS and MTS-type Services (Cont'd)

(F) Access Groups - Non-Equal Access and Equal Access Offices

When an access group has usage that originates from and/or terminates at both end offices that have been converted to equal access and end offices that have not been converted, both premium and non-premium per minute charges as set forth in 17.1.1 following will apply respectively. The minutes billed Carrier Common Line Access Service charges will be the adjusted originating interstate access minutes plus the adjusted terminating interstate access minutes for such access groups.

The adjusted originating access minutes will be the originating interstate access minutes less the reported resold originating MTS and/or MTS-type service minutes of use as set forth in (A)(1) preceding; but not less than zero. The adjusted terminating access minutes will be the terminating interstate access minutes less the reported resold terminating MTS and/or MTS-type service minutes of use as set forth in (A)(2) preceding; but not less than zero.

The adjusted originating access minutes and the adjusted terminating access minutes will be apportioned between premium and non-premium access minutes using end-office specific usage data when available, or when usage data are not available, the premium and non-premium ratios developed as set forth in 6.4.1(C)(3) following. The Premium and Non-Premium per minute charges set forth in 17.1.1 following will apply to the respective premium and non-premium access minutes determined in this manner.

ACCESS SERVICE

3. Carrier Common Line Access Service and Federal Universal Service Charge (Cont'd) (T)

3.6 Resold Services (Cont'd)

3.6.4 Rate Regulations Concerning the Resale MTS and MTS-type Services (Cont'd)

(G) When the Adjustment Will Be Applied to Customer Bills

The adjustment as set forth in (D), (E) and (F) preceding will be made to the involved customer account no later than either the next bill date, or the one subsequent to that, depending on when the usage report is obtained.

(H) Conversion of Billed Usage to Minutes

When the MTS and/or MTS-type usage is shown in hours, the number of hours shall be multiplied by 60 to develop the associated MTS and/or MTS-type minutes of use. If the MTS and/or MTS-type usage is shown in a unit that does not show hours or minutes, the customer shall provide a factor to convert the shown units to minutes.

(I) Percent Interstate Use (PIU)

The adjustment as set forth in (D), (E) and (F) preceding will be made to the involved customer account after making the adjustments to the customer account as set forth in 3.8.4 following (PIU).

ACCESS SERVICE

3. Carrier Common Line Access Service (Cont'd)

(D)

(D)

ACCESS SERVICE

3. Carrier Common Line Access Service (Cont'd)

(D)

(D)

ACCESS SERVICE

3. Carrier Common Line Access Service (Cont'd)

(D)

(D)

ACCESS SERVICE

3. Carrier Common Line Access Service (Cont'd)

(D)

(D)

ACCESS SERVICE

3. Carrier Common Line Access Service and Federal Universal Service Charge (Cont'd) (T)

3.8 Rate Regulations

3.8.1 Billing of Charges

Carrier Common Line charges will be billed to each Switched Access Service provided under this tariff in accordance with the regulations as set forth in 3.8.5 following (Determination of Premium and Non-Premium Charges) except as set forth in 3.6.4 preceding (Resale) and 3.8.4 following (PIU).

3.8.2 Measuring and Recording of Call Detail

When access minutes are used to determine Carrier Common Line charges, they will be accumulated using call detail recorded by Telephone Company equipment except as set forth in 3.8.3 following (Unmeasured FGA and B Usage) and Feature Group C operator and automated operator services systems call detail such as pay telephone sent-paid, operator-DDD, operator-person, collect, credit-card, third number and/or other like calls recorded by the customer. The Telephone Company measuring and recording equipment, except as set forth in 3.8.3 following (Unmeasured FGA and B Usage), will be associated with end office or local tandem switching equipment and will record each originating and terminating access minute where answer supervision is received. The accumulated access minutes will be summed on a line by line basis, by line group or by end office, whichever type of account is used by the Telephone Company, for each customer and then rounded to the nearest minute.

ACCESS SERVICE

3. Carrier Common Line Access Service and Federal Universal Service Charge (Cont'd) (T)

3.8 Rate Regulations (Cont'd)

3.8.3 Unmeasured Feature Group A and B Usage

When Carrier Common Line Access is provided in association with Feature Group A or Feature Group B Switched Access Service in Telephone Company offices that are not equipped for measurement capabilities, assumed average interstate access minutes will be used to determine Carrier Common Line Access charges. These assumed access minutes are as set forth in the exchange carriers' access tariffs.

3.8.4 Percent Interstate Use (PIU)

When the customer reports interstate and intrastate use of in-service Switched Access Service, Carrier Common Line charges will be billed only to interstate Switched Access Service access minutes based on the data reported by the customer as set forth in 2.3.11 preceding (Jurisdictional Reports), except where the Telephone Company is billing according to actuals by jurisdiction. Interstate Switched Access Service access minutes will, after adjustment as set forth in 3.6.4 preceding (Resale), when necessary, be used to determine Carrier Common Line Charges as set forth in 3.8.5 following.

ACCESS SERVICE

3. Carrier Common Line Access Service and Federal Universal Service Charge (Cont'd) (T)

3.8 Rate Regulations (Cont'd)

3.8.5 Determination of Premium and Non-Premium Charges

After the adjustments as set forth in 3.6.4 and 3.8.4 preceding have been applied, when necessary, to Switched Access Service access minutes, charges for the involved customer account will be determined as follows:

(A) Access minutes for all premium rated Switched Access Service subject to Carrier Common Line charges will be multiplied by the Premium Access per minute rate as set forth in 17.1.1 following.

(B) Access minutes for all non-premium rated Switched Access Service subject to Carrier Common Line charges will be multiplied by the Non-Premium Access per minute rate as set forth in 17.1.1 following.

(C) Carrier Common Line charges shall not be reduced as set forth in 3.6.1 preceding unless Switched Access Charges, as set forth in Section 6. following, are applied to the customer's Switched Access Services.

(D) Terminating Premium Access or Non-Premium Access, per minute charge(s) apply to:

- all terminating access minutes of use;

  -- less those terminating access minutes of use associated with Wireless Switching Centers.

- all originating access minutes of use associated with FGA Access Services where the off-hook supervisory signaling is forwarded by the customer's equipment when the called party answers;

ACCESS SERVICE

3. Carrier Common Line Access Service and Federal Universal Service Charge (Cont'd) (T)

3.8 Rate Regulations (Cont'd)

3.8.5 Determination of Premium and Non-Premium Charges (Cont'd)

(D) (Cont'd)

- all originating access minutes of use associated with calls placed to 700, 800 series and 900 numbers, less those originating access minutes of use associated with calls placed to 700, 800 series and 900 numbers for which the customer furnishes for each month a report of either the number of calls or minutes or a report of the percent of calls or minutes that terminate in a Switched Access Service that is assessed Carrier Common Line charges.

When the customer makes this report available to the Telephone Company in advance of billing, these minutes of use will be charged on the current bill as originating minutes of use as set forth in (E) following. If a billing dispute arises concerning the customer provided report, the Telephone Company will request the customer to provide the data the customer used to develop the report. The Telephone Company will not request such data more than once a year. The customer shall supply the data within 30 days of the Telephone Company request.

When this report is not available to the Telephone Company until after billing, it shall be used by the Telephone Company to calculate and post a credit to the customer's account. The credit shall be posted to the customer's account within 30 days of receipt of the report. The credit shall be calculated by multiplying the number of access minutes of use, for which a credit is determined to be applicable, times the difference between the terminating and originating Carrier Common Line charges in effect when the calls were completed.

(D)
(D)

ACCESS SERVICE

3. Carrier Common Line Access Service and Federal Universal Service Charge (Cont'd) (T)

3.8 Rate Regulations (Cont'd)

3.8.5 Determination of Premium and Non-Premium Charges (Cont'd)

(E) The originating Premium Access or Non-Premium Access, per minute charge(s) apply to:

- all originating access minutes of use;

  -- less those originating access minutes of use associated with FGA Access Services where the off-hook supervisory signaling is forwarded by the customer's equipment when the called party answers;

  -- less all originating access minutes of use associated with calls placed to 700, 800 series and 900 numbers;

  -- less those originating access minutes of use associated with Mobile Telephone Switching Offices (MTSOs).

  -- plus all originating access minutes of use associated with calls placed to 700, 800 series and 900 numbers for which the customer furnishes for each month a report of either the number of calls or minutes or a report of the percent of calls or minutes that terminate in a Switched Access Service that is assessed Carrier Common Line charges, and for which a corresponding reduction in the number of terminating access minutes of use has been made as set forth in (D) preceding.

(D)
(D)

ACCESS SERVICE

3. Carrier Common Line Access Service and Federal Universal Service Charge (Cont'd)

3.9 Federal Universal Service Charge

The Federal Universal Service Charge (FUSC) recovers the Telephone Company's contribution to various federal universal service funds. The Telephone Company will apply the FUSC either through flat-rated, monthly line charges assessed to end users under this Tariff or through application of the FUSC Surcharge Percentage Factor. (T) (x)

3.9.1 Applicability of FUSC Charges under this Tariff

The FUSC as set forth in Section 17.1.3, following, will be billed by only those Issuing Carriers contributing to the universal service funds and who bill common line charges based on rates, terms and conditions in this Tariff. For purposes of application of FUSC charges under this Tariff, end users shall include wholesale purchasers of Public Packet Data Network Services under Section 16 of this Tariff. FUSC charges will not apply to any Interstate Common Line, Interstate Special Access or Public Packet Data Network Services purchased by customers who resell these services to end users as part of an interstate telecommunications service and are thereby required to contribute to the various federal universal service funds. In case of a dispute regarding whether the customer is reselling services and contributing to the various federal universal service funds, the Telephone Company may request a signed certification to that effect from the customer. (T) (x) (T) (x) (T) (x)

3.9.2 Rate Application

(A) Unless otherwise indicated in the respective issuing carrier's rate section in this Tariff, all recurring and nonrecurring interstate charges billed by the Telephone Company to end users under this Tariff will be subject to FUSC charges based on application of the FUSC Surcharge Percentage Factor as set forth in Section 17.1.3. (T) (x) (T) (x)

(B) Where indicated in the respective issuing carrier's rate section in this Tariff, FUSC charges related to specific end user charges will be billed by the Telephone Company at a flat rate amount as set forth for the respective end user charge as set forth in Section 17.1.3. For issuing carriers indicating flat rate amounts for FUSC charges related to certain end user charges, FUSC charges for end user charges without indication of a flat rate amount will be billed by the Telephone Company at the FUSC Surcharge Percentage Factor as set forth in Section 17.1.3. (T) (x)

(x) Filed under authority of Special Permission No. 03-030 of the Federal Communications Commission.

ACCESS SERVICE

4. End User Access Service

The Telephone Company will provide End User Access Service (End User Access) to end users who obtain local exchange service from the Telephone Company under its general and/or local exchange tariffs.

4.1 General Description

End User Access provides for the use of an End User Common Line (EUCL).

4.2 Limitations

(A) Exclusions

Telephone number detail billing, directory listings and intercept arrangements are not included with End User Access.

(B) Lifeline Assistance

Lifeline Assistance plans may reduce or eliminate End User Access Charges to certain qualifying end users. Jurisdictions where such locally approved assistance plans are in effect are set forth in 17.1.3 following.

4.3 Undertaking of the Telephone Company

The Telephone Company will provide End User Access at rates and charges as set forth in 17.1.2 as follows: (C)

- Use of an EUCL for interstate Access Services provided under this tariff. Such use will be provided when the end user obtains local exchange service.

- The Telephone Company will be responsible for contacts and arrangements with customers for the billing of End User Access charges.

ACCESS SERVICE

4. End User Access Service (Cont'd)

4.4 Obligations of Radio Common Carriers

When the end user is a Radio Common Carrier (RCC) or provider of paging service, such end users shall designate whether the local exchange service they are provided by the Telephone Company is used as an access line for RCC or paging services, or used as an administrative line.

4.5 Payment Arrangements and Credit Allowances

4.5.1 Minimum Period

The minimum period for which EUCL End User Access is provided to an end user and for which charges are applicable is the same as that in the general and/or local exchange tariffs for the associated local exchange service.

4.5.2 Cancellation of Orders

End User Access is cancelled when the order for the associated local telephone exchange service is cancelled. No cancellation charges apply.

4.5.3 Changes to Orders

When changes are made to orders for the local exchange service associated with End User Access, any necessary changes will be made for End User Access. No charges will apply.

4.5.4 Allowance for Interruptions

When there is an interruption to an EUCL, requested End User Access credit allowances for interruptions will be provided as set forth for credit allowance for interruptions in 2.4.4 preceding.

4.5.5 Temporary Suspension of Service

When an end user temporarily suspends its local exchange service which is associated with EUCL, one-half of the EUCL per month charge will be temporarily suspended for the time period the local exchange service is suspended.

ACCESS SERVICE

4. End User Access Service (Cont'd)

4.6 Rate Regulations

4.6.1 Who Is Billed

EUCL per month charges will be billed to the end user of the associated Local Exchange Service.

4.6.2 Multiparty Service

The EUCL charge for each multiparty subscriber shall be assessed as if the subscriber had subscribed to single-party service.

4.6.3 Pay Telephone Service (C)

The EUCL-Multiline Business rate will be assessed when a Payphone Service Provider obtains an exchange service line for the purposes of offering pay telephone service. (C)

4.6.4 Business Services

(A) Single Line Service

When an end user is provided a single local business exchange service in a state, multiparty and centrex services included, and when the local business exchange service is provided under the general and/or local exchange or centrex service tariffs, the EUCL Single Line Business - Individual line or trunk rate as set forth in 17.1.2(B) following, applies to each such business individual line or trunk. In the case of multiparty service, each party is deemed to be a user of an EUCL. (C) (T)

ACCESS SERVICE

4. End User Access Service (Cont'd)

4.6 Rate Regulations (Cont'd)

4.6.4 Business Services (Cont'd)

(B) Multiline Service

When an end user is provided more than one local business exchange service in a state by the same Telephone Company, pay telephone, multiparty and centrex services included, and when the local exchange service is provided under the general and/or local exchange or centrex service tariffs, the EUCL-Multiline Business - Individual line or trunk rate as set forth in 17.1.2(C) following, applies to each such Multiline Business individual line or trunk. In the case of multiparty service, each party is deemed to be a user of an EUCL. (C) (T)

ACCESS SERVICE

4. End User Access Service (Cont'd)

4.6 Rate Regulations (Cont'd)

4.6.4 Business Services (Cont'd)

(C) Centrex CO and Centrex CO-like Services

Business or residence single line or multiline usage for Centrex CO and Centrex CO-like services is determined as set forth in 4.6.4 (A) and (B) preceding. Centrex CO or CO-like service provided to a college, university or school may serve both the college, university or school offices and the student or faculty dormitory (residential) quarters. When provided to residential quarters, the residential portion of the service is commonly known as dormitory service. Residential charges will apply to lines to the student or faculty dormitory (residential) quarters as set forth in 17.1.2(A) following. Business charges for lines to the university, college or school offices will apply as set forth in 17.1.2(C) following. Charges shall be based on the number of residence and business lines reported to the Telephone Company by the end user.

ACCESS SERVICE

4. End User Access Service (Cont'd)

4.6 Rate Regulations (Cont'd)

4.6.5 Radio Common Carriers

For each local exchange service used only as a path for the transmission of Radio Common Carrier (RCC) traffic between the Telephone Company serving wire center and the RCC's radio equipment, End User Access Charges do not apply. (T)
End User Access Charges will apply to the Radio Common Carrier's local exchange service used for administrative purposes. This shall also include those Radio Common Carriers providing maritime service under Part 80 of the FCC (x)
Rules and Regulations. (x)

A Radio Common Carrier is described as a common carrier engaged in the provision of Public Mobile Service, as defined in Part 22 of the FCC Rules and (x)
Regulations which is not also in the business of providing landline local exchange telephone service.

4.6.6 Remote Call Forwarding

For each local exchange service provided as Remote Call Forwarding (RCF) residential or business service, under the general and/or local exchange service tariffs, End User Access Charges do not apply. (T)

(x) Filed under authority of Special Permission No. 93-598 of the Federal Communications Commission.

ACCESS SERVICE

4. End User Access Service (Cont'd)

4.6 Rate Regulations (Cont'd)

4.6.7 Residence Services

(A) Single Line and Multiline Service

When an end user is provided local residence exchange service(s) in a state, multiparty and Centrex services included, and when the local residence exchange or centrex service is provided under the general and/or local exchange or Centrex service tariffs, the EUCL Residence - Individual line or trunk rate as set forth in 17.1.2(A) following, applies to each such local residence exchange trunk. In the case of multiparty service each party is deemed to be a user of an EUCL. (D) (D) (D)

4.6.8 End User Port Charge (N)

Certain local exchange services provided under the general and/or local exchange service tariffs are subject to End User Port Charges as specified in 17.1.4 following. These services include:

- Integrated Services Digital Network (ISDN) – Basic (BRI)
- Integrated Services Digital Network (ISDN) – Primary (PRI) (N)

ACCESS SERVICE

4. End User Access Service (Cont'd) (D)

4.6 Rate Regulations (Cont'd)

(D)

ACCESS SERVICE

5. Access Ordering

5.1 General

This section sets forth the regulations and order related charges for services set forth in other sections of this tariff. Order related charges are in addition to other applicable charges for the services provided.

An Access Order is an order to provide the customer with Switched and Special Access and Public Packet Data Network or Access Related Service or to provide changes to existing services. (C)

The regulations, rates and charges for special construction are set forth in NATIONAL EXCHANGE CARRIER ASSOCIATION, INC. TARIFF F.C.C . NO. 3 and are in addition to the regulations, rates and charges specified in this section. (x) (x)

A customer may order any number of services of the same type and between the same premises on a single Access Order. All details for services for a particular order must be identical except for those for multipoint service.

The customer shall provide to the Telephone Company the order information required in 5.2 following, and in addition the customer must also provide:

- Customer name and premises address(es).
- Billing name and address (when different from customer name and address).
- Customer contact name(s) and telephone number(s) for the following provisioning activities: order negotiation, order confirmation, interactive design, installation and billing.

(x) Filed under authority of Special Permission No. 93-598 of the Federal Communications Commission.

ACCESS SERVICE

5. Access Ordering (Cont'd)

5.1 General (Cont'd)

5.1.1 Service Installation

The Telephone Company will provide the Access Service in accordance with the customer's requested service date, subject to the constraints established by the Telephone Company schedule of applicable service dates.

The Telephone Company shall make available to all customers, upon request, a schedule of applicable service intervals for Switched Access, Special Access and (C)
Public Packet Data Network Services. The schedule shall specify the applicable (C)
service interval for services and the quantities of services that can be provided by a requested service date. Any associated material will be provided upon request and within a reasonable period of time.

The Telephone Company will not accept orders for service dates which exceed the applicable service date by more than six months.

Access Services will be installed during Telephone Company business days. If a customer requests that installation be done outside of scheduled work hours, and the Telephone Company agrees to this request, the customer will be subject to applicable Additional Labor Charges as set forth in 17.4.3(A) following.

ACCESS SERVICE

5. Access Ordering (Cont'd)

5.1 General (Cont'd)

5.1.2 Expedited Orders

When placing an Access Order, a customer may request a service date that is prior to the applicable service date. Additionally, a customer may also request an earlier service date on a pending Access Order. In this case, an Access Order modification as set forth in 5.4 following would be required. If the Telephone Company determines that the service can be provided on the requested date and that additional labor cost or extraordinary costs are required to meet the requested service date, the customer will be notified and will be provided with an estimate of the additional charges involved. Charges will be billed at actual cost, not to exceed 10 percent over estimated charges. Such additional charges will be determined and billed to the customer as explained following. (T)

To calculate the additional labor charges, the Telephone Company will, upon authorization from the customer to incur the additional labor charges, keep track of the additional labor hours used to meet the request of the customer and will bill the customer at the applicable Additional Labor charges as set forth in 17.4.3(A) following.

To develop, determine and bill the customer the extraordinary costs which may be involved, the Special Construction terms and conditions as set forth in NATIONAL EXCHANGE CARRIER ASSOCIATION, INC. TARIFF F.C.C. NO. 3 will be used by the Telephone Company . Authorization to incur the costs and to bill the customer will be in accordance with the terms and conditions of NATIONAL EXCHANGE CARRIER ASSOCIATION , INC. TARIFF F.C.C. NO. 3 . (x) (x) (x) (x)

When the request for expediting occurs subsequent to the issuance of the Access Order, a Service Date Change Charge as set forth in 17.4.1(B) following also applies.

(x) Filed under authority of Special Permission No. 93-598 of the Federal Communications Commission.

ACCESS SERVICE

5. Access Ordering (Cont'd)

5.1 General (Cont'd)

5.1.3 Selection of Facilities for Access Orders

The option to request a specific transmission path or channel is only provided for High Capacity Facilities Special Access, or as provided for under Special Facilities Routing as set forth in Section 11. following . (C) (C)

When there are High Capacity facilities to a hub on order or in service for the customer's use, the customer may request a specific channel or transmission path be used to provide the Switched or Special Access Service requested in an Access Order. The Telephone Company will make a reasonable effort to accommodate the customer request.

ACCESS SERVICE

5. Access Ordering (Cont'd)

5.2 Ordering Requirements

5.2.1 Switched Access Service

When ordering Switched Access service, the customer must specify whether the service is to be provided as (1) Direct Trunked Transport to the end office, (2) Direct Trunked Transport to a tandem which connects with Tandem Switched Transport from the tandem to the end office or (3) Tandem Switched Transport to the end office. When all or a portion of service is ordered as Direct Trunked Transport, the customer must specify the type and quantity of Direct Trunked Transport facility (e.g., Voice Grade or High Capacity DS1 or DS3). (N)

The Customer must also specify the type of Entrance Facility to be used for Switched Access (e.g., Voice Grade or High Capacity). For High Capacity Entrance Facilities, the customer must specify the facility assignment and the channel assignment for each trunk.

Direct Trunked Transport is available at all tandems and at all end offices except those end offices identified in NATIONAL EXCHANGE CARRIER ASSOCIATION, INC. TARIFF F.C.C. NO. 4 as not having the capability to provide Direct Trunked Transport. Direct Trunked Transport is not available: (1) from end offices that provide equal access through a Centralized Equal Access arrangement, or (2) from end offices that lack recording or measurement capability.

Normally, Direct Trunked Transport of originating 800 calls from an end office is available only from Service Switching Point (SSP) equipped end offices. However, certain non-SSP equipped end offices can accommodate direct trunking of originating 800 calls. These end offices are also identified in NATIONAL EXCHANGE CARRIER ASSOCIATION, INC., TARIFF F.C.C. No. 4.

When the customer has both Tandem Switched Transport and Direct Trunked Transport at the same end office, the customer will be provided Alternate Traffic Routing as set forth in 6.4.6 following.

At the customer's request, its Local Transport may be connected to the Entrance Facility of another customer, providing the other customer submits a Letter of Authorization for this connection and assumes full responsibility for the cost of the Entrance Facility. (N)

ACCESS SERVICE

5. Access Ordering (Cont'd)

5.2 Ordering Requirements

5.2.1 Switched Access Service (Cont'd)

(A) Feature Group A

Orders for Feature Group A Switched Access Service shall be in lines.

When placing an order for Feature Group A Switched Access Service, the customer shall provide the following information in addition to that set forth in 5.1 preceding:

- The number of lines and the first point of switching (i.e., Dial Tone Office);
- Optional Features;
- Whether the Off-hook Supervisory Signaling is provided by the customer's equipment before the called party answers, or is forwarded by the customer's equipment when the called party answers;
- Lines to be provided as single lines;
- Lines to be arranged in multiline hunt group arrangements;
- Directionality (1-way, 2-way, etc.);
- A projected Percentage of Interstate Use (PIU) as set forth in 2.3.11 preceding; and (T)
- The Interexchange Carrier to which the service is connected or, in the alternative, specify the means by which the FGA access communications are transported to another state .

ACCESS SERVICE

5. Access Ordering (Cont'd)

5.2 Ordering Requirements (Cont'd)

5.2.1 Switched Access Service (Cont'd)

(B) Feature Group B

Orders for Feature Group B Switched Access Service shall be in trunks.

When placing an order for Feature Group B Service, the customer shall provide, the following information in addition to that set forth in 5.1 preceding:

- The number of trunks;
- The end office, except when FGB is provided through a centralized equal access arrangement, when direct routing is desired;
- The access tandem office when tandem routing is desired;
- Optional Features;
- Trunks to be provided as single trunks;
- Trunks to be arranged in trunk group arrangements;
- Directionality (1-way, 2-way, etc.);
- A projected Percentage of Interstate Use (PIU) as set forth in 2.3.11 preceding; (T)
- The Interexchange Carrier to which the service is connected or, in the alternative, specify the means by which the FGB access communications are transported to another state;
- The access code dialing arrangement (i.e., a uniform access code of 950-XXXX); and
- For Feature Group B switched access service to a Wireless Switching Center directly interconnected to a Telephone Company access tandem office, the customer shall provide information to the Telephone Company indicating the NXX code(s) to be accessed. (C) (C)

ACCESS SERVICE

5. Access Ordering (Cont'd)

5.2 Order Requirements (Cont'd)

5.2.1 Switched Access Service (Cont'd)

(C) Feature Group C, Feature Group D, Interim NXX Translation, Operator Transfer Service and SS7 Signaling

When placing an order for Feature Group C and D Switched Access Service, the customer shall provide:

- The number of BHMC from the customer designated premises to the end office or Operator Transfer Service location by Feature Group and by type of BHMC or

- The number of trunks desired between customer designated premises and an entry switch or Operator Transfer Service location;
- The number of BHMC or trunks required for or to be converted to an SS7 Signaling capability;
- Optional Features;
- Interim NXX Translation options;
- Operator Transfer Service option;
- A projected Percentage of Interstate Use (PIU) as set forth in 2.3.11 preceding; and (T)
- For Feature Group D switched access service to a Wireless Switching Center (WSC) directly interconnected to a Telephone Company access tandem office, the customer shall provide information to the Telephone Company indicating the NXX code(s) to be accessed. (C) (C)

When BHMC information is provided it is used to determine the number of transmission paths as set forth in 6.2.5 following.

The BHMC may be determined by the customer in the following manner. For each day (8 am to 11 pm, Monday through Friday, excluding national holidays), the customer shall determine the highest number of minutes of use for a single hour (e.g., 55 minutes in the 10-11 a.m. hour). The customer shall, for the same hour period (i.e., busy hour) for each of twenty consecutive business days, pick the 20 consecutive business days in a calendar year which add up to the largest number of minutes of use. Both originating and terminating minutes shall be included. The customer shall then determine the average busy hour minutes of capacity (i.e., BHMC) by dividing the largest number of minutes of use figure for the same hour period for the consecutive 20 business day period by 20. This computation shall be performed for each end office the customer wishes to serve. These determinations thus establish the forecasted BHMC for each end office. (T)

ACCESS SERVICE

5. Access Ordering (Cont'd)

5.2 Ordering Requirements (Cont'd)

5.2.1 Switched Access Service (Cont'd)

(C) Feature Group C, Feature Group D, Interim NXX Translation, Operator Transfer Service and SS7 Signaling (Cont'd) (T)

Customers may, at their option, order FGD by specifying the number of trunks desired between customer designated premises and an end office, access tandem or operator services location. When ordering by trunk quantities rather than BHMC quantities to an access tandem, the customer must also provide the Telephone Company an estimate of the amount of traffic it will generate to and/or from each end office subtending the access tandem to assist the Telephone Company in its own efforts to project further facility requirements.

When Feature Group C or D is ordered with the Interim NXX Translation optional feature, the customer shall specify the Service Access Code(s) (e.g., 900) and their associated NXX code(s) to be translated within the entire LATA or Market Area. The initial and subsequent orders to add, change, or delete Interim NXX Translation codes shall be placed separately or in combination with orders to change Feature Group C or D Switched Access BHMC or trunks. Customer assigned NXX codes which have not been ordered will be blocked.

Orders for the Interim NXX Translation optional feature shall not be required until such time as a customer other than an MTS/WATS provider requests Interim NXX Translation of Service Access Codes. Upon receipt of such order, the Telephone Company shall notify the MTS/WATS provider of the activation of the Interim NXX Translation Service for the Service Access Code. Following such initial activation, all customers are required to place orders for Interim NXX Translation of the Service Access Code and the Interim NXX Translation charge for the Service Access Code shall apply as set forth in 17.2.1(C) following.

ACCESS SERVICE

5. Access Ordering (Cont'd)

5.2 Ordering Requirements (Cont'd)

5.2.1 Switched Access Service (Cont'd)

(C) Feature Group C, Feature Group D, Interim NXX Translation Operator Transfer Service And SS7 Signaling (Cont'd)

For the Operator Transfer Service Option ordered in conjunction with Feature Group C or Feature Group D Switched Access Service as set forth in 6.7.1 and 6.8.1 following, the customer must specify the number of trunks or BHMCs desired between its premises and the Telephone Company operator services location.

Operator Transfer Service is provided at operator services locations as set forth in NATIONAL EXCHANGE CARRIER ASSOCIATION, INC. TARIFF F.C.C. NO. 4 . (x) (x)

(D) SS7 Optional Feature

When Feature Group C or D is ordered with the SS7 optional feature, in addition to information listed in 5.2.1(C) preceding, the customer shall specify a reference to existing signaling connections or reference a related SS7 signaling connection order. When ordering SS7 signaling, the customer shall provide the Signaling Transfer Point codes, location identifier codes and circuit identifier codes. In addition, the customer shall work cooperatively with the Telephone Company to determine the number of SS7 signaling connections required to handle its signaling traffic.

(x) Filed under authority of Special Permission No. 93-598 of the Federal Communications Commission.

ACCESS SERVICE

5. Access Ordering (Cont'd)

5.2 Ordering Requirements (Cont'd)

5.2.1 Switched Access Service (Cont'd)

(D) SS7 Optional Feature (Cont'd)

For 800 Data Base Access Service, as described in 6.1.3(A) & (C) following, the customer must order FGC or FGD to those access tandems or end offices designated as Service Switching Points (SSP) for 800 data base service or to those non-SSP equipped end offices that can accommodate direct trunking of originating 800 calls. SSP equipped end offices and access tandems and non-SSP equipped end offices that can accommodate direct trunking of originating 800 calls are designated in NATIONAL EXCHANGE CARRIER ASSOCIATION, INC. TARIFF (x)
F.C.C. NO. 4, WIRE CENTER INFORMATION. All traffic originating
from end offices not equipped to provide SS7 signalling and routing or (x)
not able to accommodate direct trunking of originating 800 calls require routing via an access tandem where SSP functionality is available.

(x) Filed under authority of Special Permission No. 93-598 of the Federal Communications Commission.

ACCESS SERVICE

5. Access Ordering (Cont'd)

5.2 Ordering Requirements (Cont'd)

5.2.2 Special Access Service

When placing an order for Special Access Service the customer must specify:

- the customer designated premises or hubs involved;
- type of service (e.g., Voice Grade, High Capacity, etc.);
- the channel interface(s);
- technical specification package;
- options desired;
- for multipoint services, the channel interface at each customer designated premises may, at the request of the customer, be different but all such interfaces shall be compatible; and
- that the traffic consists of more than ten percent interstate traffic.

All part-time Video and Program Audio services are subject to a service inquiry. A service inquiry is a request to the Telephone Company to determine if facilities exist to provide the service ordered and to determine the service date on which service can be provided to the customer.

Where the Special Access Service is exempt from the Special Access Surcharge, as set forth in 7.3 following the customer shall furnish written certification to that effect as set forth in 7.3.3 following.

When ordering bridging and/or multiplexing, the Customer must specify the telephone company hub(s) from which they desire service. The Customer must specify only those hubs that provide the type of service ordered and interconnect with the wire center(s) from which the customer requires service. The Wire Center section of NATIONAL EXCHANGE CARRIER ASSOCIATION, INC. (x)
TARIFF F.C.C. NO. 4 identifies hub types (e.g., Digital Data , High Capacity (x)
Multiplexing, etc.) and hub levels (i.e.,Hub, Terminus Hub, Intermediate Hub
and Super-Intermediate Hub). Additionally, the Subtending section of TARIFF (x)
F.C.C. NO. 4 identifies wire centers and the Intermediate and/or (x)
Super-Intermediate Hubs with which they interconnect.

(x) Filed under authority of Special Permission No. 93-598 of the Federal Communications Commission.

ACCESS SERVICE

5. Access Ordering (Cont'd)

5.2 Ordering Requirements (Cont'd)

5.2.2 Special Access Service (Cont'd)

When ordering High Capacity Optional Rate plans or upgrades to the plans, discontinuance charges, as specified in 7.2.8 following, will not apply if the conditions set forth in 7.2.8 following are met and the customer provides the following ordering information:

The High Capacity Optional Rate Plans are only available from those Telephone Companies listed in 17.3.10 following.

Term Discounts-Upgrades in Capacity (DS1 to DS3)

- The customer's order for the disconnect of the existing DS1 Service and the installation of the new DS3 Service are received at the same time and specifically reference the application of upgrade in capacity.

- The customer's disconnect order for the existing DS1 Service must reference the DS3 Service installation order.

Customer orders to install and disconnect DS1 or DS3 services provided under a Term Discount plan where the number of DS1s or DS3s remains constant and the customer wishes to maintain the existing Term Discount period and minimum service period must:

- Be received at the same time; and

- Reference continuation of the existing Term Discount period and the minimum service period on both the installation and disconnect orders.

DS3 Capacity Discounts - Upgrades

- The customer's order for the disconnect of the current DS3 Capacity Interface and order for the installation of the upgraded DS3 Capacity Interface are received by the telephone company at the same time and specifically reference the application of upgrade in capacity.

  The customer's disconnect order for the existing DS3 Service must reference the installation order.

ACCESS SERVICE

5. Access Ordering (Cont'd)

5.2 Ordering Requirements (Cont'd)

5.2.3 WATS or WATS-Type Services

Special Access Service may be ordered for connection with FGA, FGB, FGC or FGD Switched Access Service at Telephone Company designated WATS Serving Offices (WSOs) for the provision of WATS or WATS-type Services and may be ordered separately by a customer other than the customer which orders the FGA, FGB, FGC or FGD Switched Access Service. For the Special Access Service the customer shall specify:

- the customer designated premises at which the Special Access service terminates;
- the type of line (i.e., two-wire or four-wire);
- the type of calling (i.e., originating, terminating or two-way); and
- type of Supervisory Signaling.

When the optional screening, switching and/or recording functions are not provided at the customer serving wire center, Channel Mileage, as set forth in 7.2.1 following, must be ordered between that wire center and the nearest WSO where the screening, switching and/or recording functions can be provided.

5.2.4 Mixed Use Facilities - Switched and Special Access

Mixed use is the provision of both Switched and Special Access Services over the same High Capacity facilities. Mixed use facilities to a hub will be ordered and provided as Special Access Service. Where mixed use is employed, individual services utilizing these facilities must be ordered either as Switched Access Service or Special Access Service as further elaborated and set forth in 6.4.7 and 7.2.7 following. When placing the order for the individual service(s), the customer must specify a channel assignment for each service ordered.

ACCESS SERVICE

5. Access Ordering (Cont'd)

5.2 Ordering Requirements (Cont'd)

5.2.5 Miscellaneous Services

Testing Service, Additional Labor, Telecommunications Service Priority and Special Facilities Routing shall be ordered with an Access Order or may subsequently be added to a pending order at any time up to and including the service date for the access service. When miscellaneous services are added to a pending order a service date change may be required. When a service date change is required, the service date change charge as set forth in 17.4.1(B) following will apply. When miscellaneous services are added to a pending order, charges for a design change as set forth in 17.4.1(C) following will apply when an engineering review is required. If both a service date change and an engineering review are required, both the Service Date Change Charge and the Design Change Charge will apply as set forth in 5.4.3(A) and (B) following.

The rates and charges for these services, as set forth in Section 17 of this tariff, will apply in addition to the ordering charges set forth in Section 17, and the rates and charges for the Access Service with which they are associated.

Additional Engineering is not an ordering option, but will be applied to an Access Order when the Telephone Company determines that Additional Engineering is necessary to accommodate a customer request. Additional Engineering will only be required as set forth in 13.1 following. When it is required, the customer will be so notified and will be furnished with a written statement setting forth the justification for the Additional Engineering as well as an estimate of the charges. If the customer agrees to the Additional Engineering, a firm order will be established. If the customer does not want the service or facilities after being notified that Additional Engineering of Telephone Company facilities is required, the order will be withdrawn and no charges will apply. Once a firm order has been established, the total charge to the customer for the Additional Engineering may not exceed the estimated amount by more than 10%.

ACCESS SERVICE

5. Access Ordering (Cont'd)

5.2 Ordering Requirements (Cont'd)

5.2.6 Frame Relay Access Service (N)

When ordering Frame Relay Access Service, a minimum of two port connections are required for data to be transported between customer designated premises.

When placing an order for Frame Relay access Service the customer must specify:

- the number of Permanent Virtual Connections (PVCs) required;
- the location of the ports for each PVC;
- the Committed Information Rates (CIRs) that will be associated with each PVC;
- that the traffic consists of more than ten percent interstate traffic.

The port connecting the special access facility to the telephone company frame relay switch must be ordered and provided at the same speed as the special access facility.

When connecting to the port of another customer, the ordering customer must obtain authorization from the other customer.

When an extended PVC is ordered, the customer is responsible for placing the order with all telephone companies involved. (N)

ACCESS SERVICE

5. Access Ordering (Cont'd)

5.3 Access Orders For Services Provided By More Than One Telephone Company

Access Services provided by more than one Telephone Company are services where one end of the Local Transport or Channel Mileage element is in the operating territory of one Telephone Company and the other end of the element is in the operating territory of a different Telephone Company or where the Interim NXX Translation service and the end office are not provided by the same Telephone Company.

The ordering procedure for this service is dependent upon the billing arrangement, as set forth in 2.4.7 preceding, to be used by the Telephone Companies involved in providing the Access Service. The Telephone Company will notify the customer which of the ordering procedures will apply.

5.3.1 Non Meet Point Billing Ordering - FGA

(A) Single Company Billing Ordering

The Telephone Company receiving the order from the customer will arrange to provide the service and bill the customer as set forth in 2.4.7(A)(1). The customer will place the order with the Telephone Company as follows:

For FGA Switched Access Service the customer will place the order with the Telephone Company in whose territory the first point of switching is located. The first point of switching is the dial tone office.

When the first point of switching is not in the same Telephone Company's territory as the Interexchange Carrier premises, the customer must supply a copy of the order to the Telephone Company in whose territory the Interexchange Carrier premises is located and any other Telephone Company(s) involved in providing the service. When service is provided through a centralized equal access provider, the customer must supply a copy of the order to that provider.

ACCESS SERVICE

5. Access Ordering (Cont'd)

5.3 Access Orders For Services Provided By More Than One Telephone Company (Cont'd)

5.3.2 Meet Point Billing Ordering

Each Telephone Company will provide its portion of the Access Service within its operating territory to an interconnection point(s) with the other Telephone Company(s). Billing Percentages will be determined by the Telephone Companies involved in providing the Access Service and listed in NATIONAL EXCHANGE CARRIER ASSOCIATION, INC. TARIFF F.C.C. NO. 4. Each Telephone Company will bill the customer for its portion of the service as set forth in 2.4.7. All other appropriate charges in each Telephone Company tariff are applicable. (C)

For the service(s) ordered as set forth following, the customer must also supply a copy of the order to the Telephone Company in whose operating territory a customer designated premises is located and any other Telephone Company(s) involved in providing the service. Additionally, when service is provided through a centralized equal access provider, the customer must supply a copy of the order to that provider.

(A) For Feature Group A and B Switched Access Services, the customer must place an order with the Telephone Company in whose territory the first point of switching is located, (i.e., FGA - dial tone office, FGB - access tandem or end office). The Telephone Company will designate the first point(s) of switching for FGB Services where the Telephone Company elects to provide equal access through a centralized equal access arrangement. Those Telephone Company offices providing equal access through centralized arrangements are identified in NATIONAL EXCHANGE CARRIER ASSOCIATION, INC. TARIFF F.C.C. NO. 4.

(B) For Feature Group C and D Switched Access Services, the customer must place an order with the Telephone Company in whose territory the end office is located. Customers may, at their (C)
option, order FGD to the access tandem. When ordered (C)
to the access tandem, and the access tandem and the end office are not in the same Telephone Company operating territory, the customer must also supply a copy of the order to each additional Telephone Company subtending the access tandem.

ACCESS SERVICE

5. Access Ordering (Cont'd)

5.3 Access Orders For Services Provided By More Than One Telephone Company (Cont'd)

5.3.2 Meet Point Billing Ordering (Cont'd)

(C) Customers ordering Special Access Service to be interconnected with Switched Access Services at Telephone Company designated WATS Serving Offices for the provision of WATS or WATS-type Services must place an order with each Telephone Company in whose territory the end office and the WATS Serving Office are located, if they are not collocated.

(D) Except for Special Access Service as set forth in (C) above or as set forth in (E) below, the customer may place the order for a Special Access Service with either Exchange Telephone Company.

(E) For Special Access Service involving a hub(s) the customer must place the order with the Telephone Company(s) in whose territory the hub(s) is located.

(F) For initiation, additions, changes or deletions to the Interim NXX Translation code(s), the customer must place an order with the Telephone Company who provides the Interim NXX Translation. The customer must also provide a copy of the order to the Telephone Companies subtending the Interim NXX Translation office.

ACCESS SERVICE

5. Access Ordering (Cont'd)

5.4 Charges Associated with Access Ordering

5.4.1 Access Order Charge (x)

The Access Order Charge is applied to all customer requests for new Special Access, Public Packet Data Network and Switched Access Service. In addition, (C)
the Access Order Charge is applicable to customer requests for additions, changes or rearrangements to existing Special Access, Public Packet Data (C)
Network and Switched Access Service with the following exceptions: (C)

The Access Order Charge does not apply:

- When a Service Date Change Charge is applicable;
- When a Design Change Charge is applicable;
- To administrative changes as set forth in 6.4.1(B)(3) and 7.2.2(C)(3) following;
- When a change to a pending order does not result in the cancellation of the pending order and the issuance of a new order;
- When the Interim NXX Translation charge is applicable;
- When a Miscellaneous Service Order Charge is applicable;
- When a Presubscription Charge is applicable;
- When Payphone Service Providers (PSPs) obtain Coin Supervision Additive Service in conjunction with local exchange service lines for the provision of pay telephone service. (N)

(x) Issued pursuant to Special Permission No. 93-1216 of the Federal Communications Commission.

ACCESS SERVICE

5. Access Ordering (Cont'd)

5.4 Charges Associated with Access Ordering (Cont'd)

5.4.1 Access Order Charge (Cont'd)

- When a Telephone Company initiated network reconfiguration requires a customer's existing access service to be reconfigured;

- When a service with an ICB rate is converted to a similar service with a non-ICB tariff rate prior to the expiration of the ICB; or

- When a Billing Name and Address Order charge is applicable.

- When a 900 Blocking Service charge is applicable.

- When a customer requests a change of trunks from tandem-switched transport to direct-trunked transport or from direct-trunked transport to tandem-switched transport or requests to rearrange switched access service between lower capacity and higher capacity facilities (e.g. voice grade to/from DS1 or DS1 to/from DS3), providing :

- the change is ordered no later than July 1, 1994 , and
- the change is completed no later than October 1 , 1994, and
- the orders to disconnect existing trunks and to connect the new trunks are placed at the same time, and
- the number of installed trunks does not exceed the number of trunks disconnected. If the number of installed trunks exceeds the number of trunks disconnected, the Access Order Charge will apply unless the customer provides justification based upon standard engineering methods to show that the additional capacity is required to maintain the same level of service .

- When a customer requests a change of trunks from tandem-switched transport to direct-trunked transport or orders the disconnection of overprovisioned trunks, providing: (N) (x)
  - the change is ordered anytime between June 17, 1997 and December 31, 1998 and
  - the change is completed no later than March 31, 1999 and
  - the orders to disconnect existing trunks and to connect the new trunks are placed at the same time. (N) (x)

The Access Order Charge will be applied on a per order basis to each order received by the Telephone Company or copy of an order received by the Telephone Company pursuant to 5.3.1 preceding and 5.3.2 preceding, except by the Telephone Company applying the Interim NXX Translation charge, and is in addition to other applicable charges as set forth in this and other sections of this tariff.

The Access Order Charge will be applied on a per order basis for any change, rearrangement or addition to the delivery of signaling to an existing STP Port.

(x) Issued in compliance with the Federal Communications Commission's First Report and Order, In the Matter of Access Charge Reform, CC Docket No. 96-262 (FCC 97-158), released May 16, 1997, paragraph 176.

ACCESS SERVICE

5. Access Ordering (Cont'd)

5.4 Charges Associated with Access Ordering (Cont'd)

5.4.2 Miscellaneous Service Order Charge

A Miscellaneous Service Order Charge, as set forth in 17.4.1(D) following, applies to any service, or combination of services , ordered simultaneously from Section 13. of the tariff for which a service order is not already pending (with the exception of Presubscription (13.4), Billing Name and Address Service (13.9), 900 Blocking Service (13.8), and Flex ANI (13.14), which does not have the charge applied). The Miscellaneous Service Order Charge is an administrative charge designed to compensate for the expenses associated with service order issuance. (C)

The charge always applies to the following services since a pending service order would not exist:

- Overtime Repair (13.2.2);
- Standby Repair (13.2.3);
- Testing and Maintenance with Other Telephone Companies other than when in conjunction with Acceptance Testing (13.2.4);
- Other Labor (13.2.5); and
- Maintenance of Service (13.3.2).
- Originating Line Screening (OLS) Service (13.10).

The Miscellaneous Service Order Charge will also apply to the following services if they are ordered subsequent to the initial installation of the associated access service, thereby necessitating the issuance of another service order:

- Telecommunications Service Priority (13.3.3);
- Controller Arrangement (13.3.4(A)); and
- International Blocking Service (13.8).

ACCESS SERVICE

5. Access Ordering (Cont'd)

5.4 Charges Associated with Access Ordering (Cont'd)

5.4.2 Miscellaneous Service Order Charge (Cont'd)

The charge does not apply to the following services since there would exist a pending service order:

- Additional Engineering (13.1);
- Overtime Installation (13.2.1);
- Standby Acceptance Testing (13.2.3);
- Testing and Maintenance with Other Telephone Companies when in conjunction with Acceptance Testing (13.2.4); (C)
- Additional Cooperative Acceptance Testing (13.3.1(A)(1) and 13.3.1(B)(1)); and (C)
- Coin supervision Additive Service (13.12). (N)

5.4.3 Access Order Change Charges

Access Order changes involve service date changes and design changes. The customer may request a change of its Access Order prior to the service date. The Telephone Company will make every effort to accommodate a requested change when it is able to do so with the normal work force assigned to complete such an order within normal business hours. If the change cannot be made with the normal work force during normal business hours, the Telephone Company will notify the customer. If the customer still desires the Access Order change, the Telephone Company will schedule a new service date as set forth in 5.1.2 preceding. All charges for Access Order change as set forth in 17.4.1(B) and (C) will apply on a per occurrence basis.

Any increase in the number of Special Access Service channels or Switched Access Service lines, trunks, busy hour minutes of capacity or Frame Relay Ports (C)
and/or PVCs or CCS/SS7 Port Terminations will be treated as a new Access (C)
Order (for the increased amount only).

If order changes are necessary to satisfy the transmission performance for a Special Access Service ordered by a customer, these changes will be made without order change charges being incurred by the customer.

ACCESS SERVICE

5. Access Ordering (Cont'd)

5.4 Charges Associated with Access Ordering (Cont'd)

5.4.3 Access Order Change Charges (Cont'd)

(A) Service Date Change

The customer may request a change of service date on a pending Access Order prior to the service date. A change of service date is a change of the scheduled service date by the customer to either an earlier date or a later date which does not exceed 30 calendar days from the original service date.

If the Telephone Company determines that the customer's request can be accommodated without delaying the service dates for orders of other customers, the service date will be changed and the Service Date Change Charge, as set forth in 17.4.1(B) following, will be applied to the order.

If the service date is changed to an earlier date, and the Telephone Company determines additional labor or extraordinary costs are necessary to meet the earlier service date requested by the customer, the customer will be notified by the Telephone Company that Expedited Order Charges as set forth in 5.1.2 preceding apply. Such charges will apply in addition to the Service Date Change Charge.

If the requested service date exceeds 30 calendar days following the original service date, and the Telephone Company determines that the customer's request can be accommodated, the Telephone Company will cancel the original order and apply the Cancellation Charges as set forth in 5.5.3 following. A new Access Order with a new service date will be issued. The Service Date Change Charge will not apply, however, the Access Order Charge will apply to the new order.

If the service date is changed due to a design change as set forth in (B) following, the Service Date Change Charge will apply.

ACCESS SERVICE

5. Access Ordering (Cont'd)

5.4 Charges Associated with Access Ordering (Cont'd)

5.4.3 Access Order Change Charges (Cont'd)

(B) Design Change

The customer may request a design change to the service ordered prior to the requested service date. A design change is any change to an Access Order which requires engineering review. An engineering review is a review by Telephone Company personnel, of the service ordered and the requested changes to determine what changes in the design, if any, are necessary to meet the changes requested by the customer. Design changes include such things as the addition or deletion of optional features or functions or a change in the type of Transport Termination (Switched Access only), type of channel interface, type of Interface Group or technical specification package, or a change in the destination of PVC, speed of PVC or speed of the end user port. Design changes do not include a change of customer designated premises, first point of switching, Feature Group type or Special Access Service channel type. Changes of this nature will require the issuance of a new order and the cancellation of the original order with appropriate cancellation charges applied. (C) (C)

The Telephone Company will review the requested change, notify the customer whether the change is a design change, if the change can be accommodated and if a new service date is required. If the customer authorizes the Telephone Company to proceed with the design change, a Design Change Charge as set forth in 17.4.1(C) following will apply in addition to the charge for Additional Engineering as set forth in 17.4.2 following. If a change of service date is required, the Service Date Change Charge as set forth in 17.4.1(B) following will also apply. The Access Order Charge as specified in 17.4.1 following does not apply.

ACCESS SERVICE

5. Access Ordering (Cont'd)

5.5 Minimum Periods and Cancellations

5.5.1 Minimum Periods

The minimum period for part-time Video and Program Audio Special Access Services is one day even though the service will be provided only for the duration of the event specified on the order (e.g., 1/2 hour, 2 hours, 5 hours, etc.). The minimum period for Switched Access High Capacity DS3 Entrance Facilities and Direct Trunked Transport is as set forth in 6.1.3 following. The minimum period for High Capacity DS1 and DS3 Special Access Services and (C)
the Frame Relay Access Service 1.544 Mbps Port is as set forth in 7.2.8 (C)
following.

Switched Access usage rate services (i.e., End Office Common Line, Tandem Switched Transport, and Residual Interconnection Charge) have no minimum period. The minimum period for which all other Access Service is provided and for which charges are applicable, is one month. (T)

5.5.2 Development of Minimum Period Charges

When Access Service is disconnected after commencement of service but prior to the expiration of the minimum period, charges are applicable for the balance of the minimum period. A disconnect constitutes facilities being returned to available inventory.

The Minimum Period Charge for monthly billed services will be determined as follows:

(A) For Switched Access Service, the charge for a month or fraction thereof is equal to the applicable recurring charges plus any nonrecurring and/or Special Construction charge(s) that may be due; and

(B) For Special Access Service, flat rated Switched Access Service and (C)
Public Packet Data Network Service the charge for a month or fraction (C)
thereof is the applicable monthly rates for the appropriate channel type plus any optional features, nonrecurring and/or special construction charge(s) that may apply.

ACCESS SERVICE

5. Access Ordering (Cont'd)

5.5 Minimum Period and Cancellations (Cont'd)

5.5.2 Development of Minimum Period Charges (Cont'd)

The Minimum Period Charge for part-time Video and Program Audio Services is the applicable daily rate for the appropriate channel type as set forth in 7.2.4 following.

5.5.3 Cancellation of an Access Order

(A) A customer may cancel an Access Order for the installation of service on any date prior to the service date. The cancellation date is the date the Telephone Company receives written or verbal notice from the customer that the order is to be cancelled. The verbal notice must be followed by written confirmation within 10 days. If a customer or a customer's end user is unable to accept Access Service within 30 calendar days after the original service date, the customer has the choice of the following options:

- The Access Order shall be cancelled and charges set forth in (B) following will apply; or
- Billing for the service will commence.

In such instances, the cancellation date or the billing date, depending on which option is selected by the customer, shall be the 31st day beyond the original service date of the Access Order.

ACCESS SERVICE

5. Access Ordering (Cont'd)

5.5 Minimum Period and Cancellations (Cont'd)

5.5.3 Cancellation of an Access Order (Cont'd)

(B) When a customer cancels an Access Order for the installation of service, a Cancellation Charge will apply as follows:

(1) Installation of Switched Access, Special Access Service, or Public Packet Data Network Service facilities is considered to have started when the Telephone Company incurs any cost in connection therewith or in preparation thereof which would not otherwise have been incurred. (C) (C)

(2) Where the customer cancels an Access Order prior to the start of installation of access facilities, no charges shall apply.

(3) Where installation of access facilities has been started prior to the cancellation, the charges specified in (a) or (b) following, whichever is lower, shall apply.

(a) A charge equal to the costs incurred in such installation, less estimated net salvage. Such costs include the nonrecoverable cost of equipment and material ordered, provided or used, plus the nonrecoverable cost of installation and removal including the costs of engineering, labor, supervision, transportation, rights-of-way and other associated costs; or

(b) The minimum period charges for Switched Access, Special Access, or Public Packet Data Network Service ordered by the customer, as set forth in 5.5.2 preceding. (C) (C)

(C) When a customer cancels an order for the discontinuance of service, no charges apply for the cancellation.

ACCESS SERVICE

5. Access Ordering (Cont'd)

5.5 Minimum Period and Cancellations (Cont'd)

5.5.3 Cancellation of an Access Order (Cont'd)

(D) If the Telephone Company misses a service date by more than 30 days and such delay is not requested or caused by the customer (excluding those circumstances where the date is missed due to acts of God, governmental requirements, work stoppages and civil commotions), the customer may cancel the Access Order without incurring cancellation charges.

5.5.4 Partial Cancellation Charge

Any decrease in the number of ordered Special Access Service channels or Switched Access Service lines, trunks, busy hour minutes of capacity or Frame Relay Ports and/or PVCs or CCS/SS7 Port Terminations will be treated as a partial cancellation and charges will be determined as set forth in 5.5.3(B) preceding. (C) (C)

ACCESS SERVICE

6. Switched Access Service

6.1 General

Switched Access Service, which is available to customers for their use in furnishing their services to end users, provides a two-point communications path between a customer designated premises and an end user's premises. It provides for the use of common terminating, switching, and trunking facilities and for the use of common subscriber plant of the Telephone Company. Switched Access Service provides for the ability to originate calls from an end user's premises to a customer designated premises, and to terminate calls from a customer designated premises to an end user's premises in the LATA where it is provided. Specific references to material describing the elements of Switched Access Service are provided in 6.1.3 and 6.5 through 6.9 following.

Rates and charges for Switched Access Service depend generally on the specific Feature Group ordered by the customer, e.g., for MTS or WATS services or MTS/WATS equivalent services, and whether it is provided in a Telephone Company end office that is equipped to provide equal or non-equal access. Rates and charges for Switched Access Service are set forth in 17.2 following. The application of rates for Switched Access Service is described in 6.4 following. Rates and charges for services other than Switched Access Service, e.g., a customer's interLATA toll message service, may also be applicable when Switched Access Service is used in conjunction with these other services. Descriptions of such applicability are provided in 6.4.5, 6.4.9, 6.5.1(H), 6.5.3, 6.6.1(G), 6.6.2(D), 6.7.1(F) and 6.8.1(E) following. Finally, a credit is applied against line side Switched Access Service charges as described in 6.4.8 following. (T)

ACCESS SERVICE

6. Switched Access Service (Cont'd)

6.1 General (Cont'd)

6.1.1 Description and Provision of Switched Access Service Arrangements

(A) Description

Switched Access Service is provided in four different Feature Group arrangements which are service categories of standard and optional features. These are differentiated by their technical characteristics, e.g., line side vs. trunk side connection at the Telephone Company first point of switching. They are also differentiated by optional feature availability and the manner in which the end user accesses them in originating calling, e.g., with or without access codes of various lengths and digits.

The provision of each Feature Group requires Local Transport facilities including an Entrance Facility where required and the appropriate End Office functions. In addition, Special Access Service may, at the option of the customer, be connected with Feature Groups A, B, C, or D at Telephone Company designated WATS Serving Offices. (C) (C)

There are three specific transmission specifications (i.e., Types A, B and C) that have been identified for the provision of Feature Groups. The technical specifications for the Entrance Facility and Direct Trunked Transport are the same as those set forth in Section 7 following for Voice Grade and High Capacity services. The specifications provided are dependent on the Interface Group and the routing of the service, i.e., whether the service is routed directly to the end office or via an access tandem. The parameters for the transmission specifications are set forth in 15.1.2 following. (C) (C)

ACCESS SERVICE

6. Switched Access Service (Cont'd)

6.1 General (Cont'd)

6.1.1 Description and Provision of Switched Access Service Arrangements (Cont'd)

(A) Description (Cont'd)

Feature Groups are arranged for either originating, terminating or two-way calling, based on the customer end office switching capacity ordered. Originating calling permits the delivery of calls from Telephone Exchange Service locations to the customer designated premises. Terminating calling permits the delivery of calls from the customer designated premises to Telephone Exchange Service locations. Two-way calling permits the delivery of calls in both directions, but not simultaneously. The Telephone Company will determine the type of calling to be provided unless the customer requests that a different type of directional calling is to be provided. In such cases, the Telephone Company will work cooperatively with the customer to determine the directionality.

There are various optional features associated with Local Transport, Common Switching and Transport Termination available with the Feature Groups. In addition, the Interim NXX Translation and Operator Transfer Service optional features are available with Feature Group C and Feature Group D.

Operator Transfer Services will be provided over FGC or FGD switched access service trunks from the operator service location to the customer's premises. Where required by technical limitations, a separate FGC or FGD trunk group will be established for Operator Transfer Service. The operator service location will provide trunk answer and disconnect supervisory signaling to the customer.

Detailed descriptions of each of the available Feature Groups are set forth in 6.5 through 6.9 following. Each Feature Group is described in terms of its specific physical characteristics and calling capabilities, the optional features available for use with it and the standard testing capabilities.

The Common Switching and Transport Termination optional features, which are described in 6.9 following, unless specifically stated otherwise, are available at all Telephone Company end office switches.

ACCESS SERVICE

6. Switched Access Service (Cont'd)

6.1 General (Cont'd)

6.1.1 Description and Provision of Switched Access Service Arrangements (Cont'd)

(B) Manner of Provision

Switched Access is furnished in either quantities of lines or trunks, or in busy hour minutes of capacity (BHMCs). FGA Access and FGB Access are furnished on a per-line or per-trunk basis respectively. FGC Access and FGD Access are furnished on a BHMC basis and on a per trunk basis (C)
as set forth in 5.2 preceding . (C)

BHMCs are differentiated by type and directionality of traffic carried over a Switched Access Service arrangement. Differentiation of traffic among BHMC types is necessary for the Telephone Company to properly design Switched Access Service to meet the traffic carrying capacity requirement of the customer.

There are three major BHMC categories identified as: Originating, Terminating and Directory Assistance. Originating BHMCs represent access capacity within a LATA for carrying traffic from the end user to the customer; Terminating BHMCs represent access capacity within a LATA for carrying traffic from the customer to the end user; and, Directory Assistance BHMCs represent access capacity within a LATA for carrying Directory Assistance traffic from the customer to a Directory Assistance location. When ordering capacity for FGC Access or FGD Access in BHMCs, the customer must at a minimum specify such access capacity in terms of Originating BHMCs and/or Terminating BHMCs.

ACCESS SERVICE

6. Switched Access Service (Cont'd)

6.1 General (Cont'd)

6.1.1 Description and Provision of Switched Access Service Arrangements (Cont'd)

(B) Manner of Provision (Cont'd)

Because some customers will wish to further segregate their originating traffic into separate trunk groups, or because segregation may be required by network considerations originating BHMCs are further categorized into Domestic, 700, 800, 900, Operator, IDDD and Operator Transfer Services. Domestic BHMCs represent access capacity for carrying only domestic traffic other than 700, 800, 900, Operator and Operator Transfer Services traffic; IDDD BHMCs represent access capacity for carrying only international traffic; and, 700, 800, 900, Operator and Operator Transfer Services BHMCs represent access capacity for carrying, respectively, only 700, 800, 900, Operator or Operator Transfer Services traffic. When ordering such types of access capacity, the customer must specify Domestic, 700, 800, 900, Operator, IDDD or Operator Transfer Services BHMCs.

6.1.2 Ordering Options and Conditions

Switched Access Service is ordered under the Access Order provisions set forth in 5.2 preceding. Also, included in that section are regulations concerning miscellaneous service order charges which may be associated with Switched Access Service ordering (e.g., Service Date Changes, Cancellations, etc.).

6.1.3 Rate Categories

There are four rate categories which apply to Switched Access Service:

- Local Transport (described in 6.1.3(A) following)
- End Office (described in 6.1.3(B) following)
- Chargeable Optional Features (described in 6.1.3(C) following)
- Common Line (described in Section 3 preceding)

ACCESS SERVICE

6. Switched Access Service (Cont'd)

6.1 General (Cont'd)

6.1.3 Rate Categories (Cont'd)

The following diagram depicts a generic view of the components of Switched Access Service and the manner in which the components are combined to provide a complete Access Service.

ACCESS SERVICE

6. Switched Access Service (Cont'd)

6.1 General (Cont'd)

6.1.3 Rate Categories (Cont'd)

(A) Local Transport

The Local Transport rate category establishes the charges related to the transmission and tandem switching facilities between the customer designated premises and the end office switch(es), which may be a Remote Switching Module(s) or WATs Serving Office, where the customer's traffic is switched to originate or terminate the customer's communications. Mileage measurement rules are set forth in 6.4.6 following and in this section. (N) (N)

Local Transport is a two-way voice frequency transmission path composed of facilities determined by the Telephone Company. The two-way voice frequency transmission path permits the transport of calls in the originating direction (from the end user end office switch to the customer designated premises) and in the terminating direction (from the customer designated premises to the end office switch), but not simultaneously. The voice frequency transmission path may be comprised of any form or configuration of plant capable of and typically used in the telecommunications industry for the transmission of voice and associated telephone signals within the frequency bandwidth of approximately 300 to 3000 Hz. The customer must specify the choice of facilities (i.e., Voice Grade 2 or 4 wire or High Capacity DS1 or DS3) to be used in the provision of the Direct Trunked Transport or Entrance Facility.

The customer must specify when ordering (1) whether the service is to be directly routed to an end office switch or through an access tandem switch, and (2) the type of Direct Trunked Transport and whether it will overflow to Tandem Switched Transport when service is directly routed to an end office, (3) the type of Entrance Facility, (4) the directionality of the service, and (5) when multiplexing is required, the hub(s) at which the multiplexing will be provided.

6. Switched Access Service (Cont'd)

6.1 General (Cont'd)

6.1.3 Rate Categories (Cont'd)

(A) Local Transport (Cont'd)

When service is to be routed through an access tandem switch, the facility between the serving wire center and the tandem will be provided as Direct Trunked Transport. (C) (C)

When the customer has both Tandem Switched Transport and Direct Trunked Transport at the same end office that is not collocated with a tandem, the customer will be provided Alternate Traffic Routing as set forth in 6.4.6 following. (C)

Direct Trunked Transport is available at all tandems and at all end offices except those end offices identified in NATIONAL EXCHANGE CARRIER ASSOCIATION, INC. TARIFF F.C.C. NO. 4, as not having the capability to provide Direct Trunked Transport. Direct Trunked Transport is not available: (1) from end offices that provide equal access through a centralized equal access arrangement, (2) from end offices that lack recording or measurement capability.

Normally, Direct Trunked Transport of originating 800 series type calls from an end office is available only from Service Switching Point (SSP) equipped end offices. However, certain non-SSP equipped end offices can accommodate direct trunking of originating 800 series type calls. These end offices are also identified in NATIONAL EXCHANGE CARRIER ASSOCIATION, INC., TARIFF F.C.C. No. 4. (x) (x) (x)

Unless otherwise ordered by the F.C.C., where the Telephone Company elects to provide equal access through a centralized equal access arrangement, the Telephone Company will designate the serving wire center. The designated SWC will normally be that wire center which provides dial tone to the telephone company centralized Equal Access tandem office identified in NATIONAL EXCHANGE CARRIER ASSOCIATION, INC. TARIFF F.C.C. NO. 4.

(x) Issued pursuant to Special Permission No. 96-212 of the Federal Communications Commission.

ACCESS SERVICE

6. Switched Access Service (Cont'd)

6.1 General (Cont'd)

6.1.3 Rate Categories (Cont'd)

(A) Local Transport (Cont'd)

When service is provided in cooperation with a non telephone company provider of centralized Equal Access, the SWC will be that wire center which would normally provide dial tone to the telephone company point of interconnection with the non telephone company provider of centralized Equal Access specified in the tariff of the centralized Equal Access provider. Those Telephone Company offices providing equal access through centralized arrangements are identified in NATIONAL EXCHANGE CARRIER ASSOCIATION, INC. TARIFF F.C.C. NO. 4. (D)

(D)

ACCESS SERVICE

6. Switched Access Service (Cont'd)

6.1 General (Cont'd)

6.1.3 Rate Categories (Cont'd)

(A) Local Transport (Cont'd)

Local Transport is provided at the rates and charges set forth in 17.2.2 following. The application of these rates with respect to individual Feature Groups is as set forth in 6.4.1(C) following .

When more than one Telephone Company is involved in providing the Switched Access Service, the Local Transport rates are applied as set forth in 2.4.7 preceding.

The Local Transport Rate Category includes four classes of rate elements: (1) Entrance Facility, (2) Direct Trunked Transport, (3) Tandem Switched Transport, and (4) Multiplexing. (C) (C)

(1) Entrance Facility

The Entrance Facility recovers a portion of the costs associated with a communications path between a customer designated premises and the serving wire center of that premises. Included as part of the Entrance Facility is a standard channel interface arrangement which defines the technical characteristics associated with the type of facilities to which the access service is to be connected at the customer designated premises and the type of signaling capability, if any.

Three types of Entrance Facility are available: (1) Voice Grade 2 or 4 wire (an analog channel with an approximate bandwidth of 300 to 3000 Hz), (2) High Capacity DS1 (an isochronous serial digital channel with a rate of 1.544 Mbps) and (3) High Capacity DS3 (and isochronous serial digital channel with a rate of 44.736 Mbps). The minimum period for which a DS3 Entrance Facility is provided is twelve months.

ACCESS SERVICE

6. Switched Access Service (Cont'd)

6.1 General (Cont'd)

6.1.3 Rate Categories (Cont'd)

(A) Local Transport (Cont'd)

(1) Entrance Facility (Cont'd)

One charge applies for each EntranceFacility that is terminated at a customer designated premises. This charge specified in Section 17.2.2 following will apply even if the customer designated premises and the serving wire center are collocated in a Telephone Company building.

A customer's Local Transport may be connected to the Entrance Facility of another customer, providing the other customer submits a letter of authorization for this connection and assumes full responsibility for the cost of the Entrance Facility.

(2) Direct Trunked Transport

The Direct Trunked Transport rate elements recover a portion of the cost associated with the communications path between a serving wire center and an end office or serving wire center and a tandem on circuits dedicated to the use of a single customer.

Direct Trunked Transport is available to all tandems and to all end offices except those end offices identified in NATIONAL EXCHANGE CARRIER ASSOCIATION, INC. TARIFF F.C.C. NO. 4, WIRE CENTER INFORMATION as not having the capability to provide Direct Trunked Transport.

Direct Trunked Transport is not available: (1) from end offices that provide equal access through a centralized equal access arrangement, (2) from end offices that lack recording or measurement capability.

Normally, Direct Trunked Transport of originating 800 series type calls from an end office is available only from Service Switching Point (SSP) equipped end offices. However, certain non-SSP equipped end offices can accommodate direct trunking of originating 800 series type calls. These end offices are also identified in NATIONAL EXCHANGE CARRIER ASSOCIATION, INC., TARIFF F.C.C. No. 4. (C) (x) (C) (x) (C) (x)

(x)Issued pursuant to Special Permission No. 96-212 of the Federal Communications Commission.

ACCESS SERVICE

6. Switched Access Service (Cont'd)

6.1 General (Cont'd)

6.1.3 Rate Categories (Cont'd)

(A) Local Transport (Cont'd)

(2) Direct Trunked Transport (Cont'd)

Three types of Direct Trunked Transport are available: (1) Voice Grade (an analog channel with an approximate bandwidth of 300 to 3000 Hz), (2) High Capacity DS1 (an isochronous serial digital channel with a rate of 1.544 Mbps), and (3) High Capacity DS3 (an isochronous serial digital channel with a rate of 44.736 Mbps). The minimum period for which a High Capacity DS3 Direct Trunked Transport is provided is twelve months. (N)

High Capacity DS3 Direct Trunked Transport can not be terminated at end offices that are not identified as hub offices that provide DS3 to DS1 multiplexing. Additionally, DS1 Direct Trunked Transport can not be terminated at end offices that are not identified as hub offices that provide DS1 to Voice Grade multiplexing or are not electronic end offices. Offices that provide multiplexing are identified in NATIONAL EXCHANGE CARRIER ASSOCIATION, INC. TARIFF F.C.C. NO. 4, WIRE CENTER INFORMATION.

Direct Trunked Transport rates consist of a Direct Trunked Facility rate specified in Section 17.2.2 following which is applied on a per mile basis and a Direct Trunked Termination rate which is applied at each end of each measured segment of the Direct Trunked Facility (e.g., at the end office, hub, tandem, and serving wire center). When the Direct Trunked Facility mileage is zero, neither the Direct Trunked Facility rate nor the Direct Trunked Termination rate will apply. (N)

ACCESS SERVICE

6. Switched Access Service (Cont'd)

6.1 General (Cont'd)

6.1.3 Rate Categories (Cont'd)

(A) Local Transport (Cont'd)

(2) Direct Trunked Transport (Cont'd)

The Direct Trunked Facility rate recovers a portion of the costs of transmission facilities, including intermediate transmission circuit equipment, between the end points of the interoffice circuits.

The Direct Trunked Termination rate specified in Section 17.2.2 following recovers a portion of the costs of the circuit equipment that is necessary for the termination of each end of the Direct Trunked Facility.

(3) Tandem Switched Transport

The Tandem Switched Transport rate elements recover tandem switching costs and a portion of the costs associated with the communications path between a tandem and an end office on circuits that are switched at a tandem switch, or between a host and a remote switch. (C) (C) (C)

Tandem Switched Transport rates consist of a Tandem Switching rate, a Tandem Switched Facility rate, and a Tandem Switched Termination rate. The Tandem Switching rate is applicable at the Tandem, when a customer orders Direct Trunk Transport to the tandem and Tandem Switched Transport from the tandem to the end office. (C) (C)

In those instances where an SSP equipped end office is capable of handling 800 SAC Traffic on a direct trunked basis but incapable of handling 888 SAC traffic on a direct trunked basis, a full credit will be provided for Tandem Switched Transport Charges associated with FGC and FGD service for 888 SAC traffic delivered at the tandem. (x)

This results in all 800 series traffic being rated as direct trunked transport regardless of whether the SSP equipped end office is capabile of handling 888 SAC traffic on a direct trunked basis. Those SSP equipped end offices that cannot accommodate direct trunking of originating 888 SAC traffic are identified in NATIONAL EXCHANGE CARRIER ASSOCIATION,INC. TARIFF F.C.C. NO. 4, WIRE CENTER INFORMATION. (x)

(x) Issued pursuant to Special Permission No. 96-212 of the Federal Communications Commission.

ACCESS SERVICE

6. Switched Access Service (Cont'd)

6.1 General (Cont'd)

6.1.3 Rate Categories (Cont'd)

(A) Local Transport (Cont'd)

(3) Tandem Switched Transport (Cont'd) (M)

(a) The Tandem Switching rate recovers a portion of the costs of switching traffic through an access tandem. The Tandem Switching rate specified in 17.2.2 following is applied on a per access minute per tandem basis for all originating and all terminating minutes of use switched at the tandem. Tandem locations are identified in NATIONAL EXCHANGE CARRIER ASSOCIATION, INC. TARIFF F.C.C. No. 4, WIRE CENTER INFORMATION.

(b) The Tandem Switched Facility rate recovers a portion of the costs of the transmission facilities, including intermediate transmission circuit equipment, between the end points of the interoffice circuits. The Tandem Switched Facility rate specified in Section 17.2.2 following is applied on a per access minute per mile basis for all originating and terminating minutes of use routed over the facility. (M)

(c) The Tandem Switched Termination rate recovers a portion of the costs of the circuit equipment that is necessary for the termination of each end of the Tandem Switched Facility. The Tandem Switched Termination rate specified in Section 17.2.2 following is applied on a per access minute basis (for all originating and terminating minutes of use routed over the facility) at each end of each measured segment of Tandem Switched Facility (e.g., at the end office, Feature Group A dial tone office, host office, tandem, and serving wire center). When the Tandem switched Facility mileage is zero, neither the Tandem Switched Facility rate nor the Tandem Switched Termination rate will apply.

ACCESS SERVICE

6. Switched Access Service (Cont'd)

6.1 General (Cont'd)

6.1.3 Rate Categories (Cont'd)

(A) Local Transport (Cont'd)

(D)

(D)

ACCESS SERVICE

6. Switched Access Service (Cont'd)

6.1 General (Cont'd)

6.1.3 Rate Categories (Cont'd)

(A) Local Transport (Cont'd)

(D)

(D)

ACCESS SERVICE

6. Switched Access Service (Cont'd) (M)

6.1 General (Cont'd)

6.1.3 Rate Categories (Cont'd)

(A) Local Transport (Cont'd)

(5) Multiplexing

DS3 to DS1 Multiplexing charges specified in Section 17.2.2 following apply when a High Capacity DS3 Entrance Facility or High Capacity DS3 Direct Trunked Facility is connected with High Capacity DS1 Direct Trunked Transport. The DS3 to DS1 multiplexer will convert a 44.736 Mbps channel to 28 DS1 channels using digital time division multiplexing. DS1 to Voice Grade Multiplexing charges apply when a High Capacity DS1 Entrance Facility or High Capacity DS1 Direct Trunked Facility is connected with Voice Grade Direct Trunked Transport. However, a DS1 to Voice Grade Multiplexing charge does not apply when a High Capacity DS1 Entrance Facility or High Capacity DS1 Direct Trunked Transport is terminated at an electronic end office and only Switched Access Service is provided over the DS1 facility (i.e., Voice Grade Special Access channels are not derived). The DS1 to Voice Grade multiplexer will convert a 1.544 Mbps channel to 24 Voice Grade channels.

Multiplexing is only available at wire centers identified in NATIONAL EXCHANGE CARRIER ASSOCIATION, INC. TARIFF F.C.C NO. 4, WIRE CENTER INFORMATION. (M)

ACCESS SERVICE

6. Switched Access Service (Cont'd)

6.1 General (Cont'd)

6.1.3 Rate Categories (Cont'd)

(A) Local Transport (Cont'd)

(6) Interface Groups

Ten Interface Groups are provided for terminating the Entrance Facility at the customer's designated premises. Technical specifications concerning the available interface groups are set forth in 15.1 following.

(7) Nonchargeable Optional Features

Where transmission facilities permit, the individual transmission path between the customer's designated premises and the first point of switching, may at the option of the customer, be provided with the following optional features as set forth and described in 15.1.1(E) following. (T)

- Supervisory Signaling
- Customer Specified Entry Switch Receive Level
- Customer Specification of Local Transport Termination

When a customer subscribes to Common Channel Signaling Network Connection Service (CCSNC Service), the following optional features are made available and are described in 6.9.1 following.

- Signaling System 7 (SS7) Signaling
- Calling Party Number
- Carrier Selection Parameter
- Charge Number Parameter

ACCESS SERVICE

6. Switched Access Service (Cont'd)

6.1 General (Cont'd)

6.1.3 Rate Categories (Cont'd)

(A) Local Transport (Cont'd)

(8) Chargeable Optional Features

Common Channel Signaling, Signaling System 7 (CCS/SS7) Network Connection (CCSNC) Service provides a signaling path between a customer's designated Signaling Point of Interface (SPOI) and a Telephone Company's Signaling Transfer Point (STP). CCSNC is provided as set forth in 6.9.5 following.

800 Series Data Base Access Service is provided to all customers in conjunction with FGC and FGD switched access service. A Basic or Vertical Feature Query charge, as set forth in 17.2.2 (B) following, is assessed for each query launched to the 800 series data base. The Basic Query provides the identification of the customer to whom the call will be delivered and includes area of service routing which allows routing of 800 series type calls by telephone companies to different interexchange carriers based on the Local Access Transport Area (LATA) in which the call originates. The Vertical Feature Query provides this same customer identification function in addition to vertical features which may include: (1) call validation (ensuring that calls originate from subscribed service areas); (2) POTS translation of 800 series numbers (which is generally necessary for the routing of 800 series type calls); (3) alternate POTS translation (which allows subscribers to vary the routing of 800 series type calls based on factors such as time of day, place of origination of the call, etc.); and (4) multiple carrier routing (which allows subscribers to route to different carriers based on factors similar to those in (3)).

(C) (x)
(C) (x)
(C) (x)
(C) (x)
(C) (x)
(C) (x)
(C) (x)
(C) (x)

(B) End Office

The End Office rate category establishes the charges related to the local end office switching and end user termination functions necessary to complete the transmission of Switched Access communications to and from the end users served by the local end office. The End Office rate category includes the Local Switching and Information Surcharge rate elements.

(x) Filed under the authority of Special Permission No. 96-212 of the Federal Communications Commission.

ACCESS SERVICE

6. Switched Access Service (Cont'd)

6.1 General (Cont'd)

6.1.3 Rate Categories (Cont'd)

(B) End Office (Cont'd)

(1) Local Switching

The Local Switching rate element establishes the charges related to the use of end office switching equipment, the terminations in the end office of end user lines, the terminations of calls at Telephone Company Intercept Operators or recordings, the STP costs, and the SS7 signaling function between the end office and the Signaling Transfer Point. (C) (C) (D) (D)

ACCESS SERVICE

6. Switched Access Service (Cont'd)

6.1 General (Cont'd)

6.1.3 Rate Categories (Cont'd)

(B) End Office (Cont'd)

(1) Local Switching (Cont'd)

(D)
(D)

Local Switching does not apply to Feature Groups B and D Switched Access Services associated with Wireless Switching Centers (WSCs) directly interconnected to a Telephone Company access tandem office.

Where end offices are appropriately equipped, international dialing may be provided as a capability associated with Local Switching which provides local dial switching for Feature Groups C and D. International dialing provides the capability of switching international calls with service prefix and address codes having more digits than are capable of being switched through a standard FGC or FGD equipped end office. (C)

Rates for Local Switching are set forth in 17.2.3 following. The application of these rates with respect to individual Feature Groups is as set forth in 6.4.1(C) following. (C)

There are four types of functions included in the Local Switching rate element: Common Switching, Transport Termination, Line Termination and Intercept. These are described in (a) through (d) following.

ACCESS SERVICE

6. Switched Access Service (Cont'd)

6.1 General (Cont'd)

6.1.3 Rate Categories (Cont'd)

(B) End Office (Cont'd)

(1) Local Switching (Cont'd)

(a) Common Switching

Common Switching provides the local end office switching functions associated with the various access (i.e., Feature Group) switching arrangements. The Common Switching arrangements provided for the various Feature Group arrangements are described in 6.5 through 6.9 following.

Included as part of Common Switching are various nonchargeable optional features which the customer can order to meet the customer's specific communications requirements. These optional features are described in 6.9.1 following.

(b) Transport Termination

Transport Termination functions provide for the line or trunk side arrangements which terminate the Local Transport facilities. Included as part of these functions are various nonchargeable optional termination arrangements. These optional terminating arrangements are described in 6.9.2 following.

The number of Transport Terminations provided will be determined by the Telephone Company as set forth in 6.2.5 following.

ACCESS SERVICE

6. Switched Access Service (Cont'd)

6.1 General (Cont'd)

6.1.3 Rate Categories (Cont'd)

(B) End Office (Cont'd)

(1) Local Switching (Cont'd)

(c) Line Termination

Line Termination provides for the terminations of end user lines in the local end office. There are two types of Line Terminations, i.e., Common Line Terminations and Special Access Service Terminations utilized in the provision of WATS or WATS-type services at Telephone Company designated WATS Serving Offices.

The above Special Access Service Terminations are differentiated by line side vs. trunk side terminations. In addition, there are various types of originating and terminating line side terminations depending on the type of signaling associated with the Special Access Service. Line side terminations are available with either dial pulse or dual tone multifrequency address signaling.

ACCESS SERVICE

6. Switched Access Service (Cont'd)

6.1 General (Cont'd)

6.1.3 Rate Categories (Cont'd)

(B) End Office (Cont'd)

(1) Local Switching (Cont'd)

(d) Intercept

The Intercept function provides for the termination of a call at a Telephone Company Intercept operator or recording. The operator or recording tells a caller why a call, as dialed, could not be completed, and if possible, provides the correct number.

(2) Information Surcharge

Information Surcharge rates are assessed to a customer based on the total number of access minutes. Information Surcharge rates are as set forth in 17.2.3(B) following. The application of these rates with respect to individual Feature Groups is as set forth in 6.4.1(C) following.

The Information Surcharge does not apply to Feature Groups B and D Switched Access Services associated with Wireless Switching Centers (WSCs) directly interconnected to a Telephone Company access tandem office. (C) (C)

The number of end office switching transmission paths will be determined as set forth in 6.2.5 following.

ACCESS SERVICE

6. Switched Access Service (Cont'd)

6.1 General (Cont'd)

6.1.3 Rate Categories (Cont'd)

(C) Chargeable Optional Features

Where facilities permit, the Telephone Company will, at the option of the customer, provide the following chargeable optional features.

(1) Interim NXX Translation

The Interim NXX Translation rate element provides for customer identification of non-data base services when calls are directed by end users in the 1+SAC+NXX-XXXX (e.g., 1+900+NXX-XXXX) format. The NXX codes are assigned to specific customers in conformance with the North American Numbering Plan (NANP). NXX code assignment(s) will be made by the Bellcore NANP Coordinator. The Telephone Company will use the NXX code to identify the customer to whose point of termination the traffic is to be delivered, (i.e., at appropriately equipped electronic end offices, access tandems or through contracted arrangements with other parties.) It is then the responsibility of the customer to do any further translation the customer deems necessary to route the call. Customer assigned NXX codes which have not been ordered will be blocked.

ACCESS SERVICE

6. Switched Access Service (Cont'd)

6.1 General (Cont'd)

6.1.3 Rate Categories (Cont'd)

(C) Chargeable Optional Features (Cont'd)

(1) Interim NXX Translation (Cont'd)

A nonrecurring charge, as set forth in 17.2.1 following, is associated with this optional feature. This nonrecurring charge is assessed by the Telephone Company on a per order, per LATA or Market Area basis and is applied in lieu of the Access Order Charge specified in 17.4.1(A) following. The nonrecurring charge is assessed only by the Telephone Company that provides the final translation function. A Telephone Company is said to have provided the final Interim NXX Translation when its translation identifies the customer's traffic and this traffic is then delivered to the customer's point of termination without any further translation. The description and application of this charge with respect to Feature Group C and Feature Group D is as set forth in 6.4.1(B)(2) and 6.4.1(C) following.

(2) Operator Transfer Services

Operator Transfer Service may be provided with Feature Group C or Feature Group D Switched Access Service at Telephone Company designated Operator Services location. Operator Transfer Service is an originating service. The rate is assessed per 0- call transferred to a customer's operator. An 0- call is considered transferred when the Telephone Company Operator activates the switch transferring the call to the designated customer and the customer acknowledges receipt.

In addition to the Operator Transfer Service charge described above and in 6.9.4 following, Feature Group C or Feature Group D Switched Access rates and charges as set forth in 6.4.1(B)(1) and 6.4.1(C) following and Carrier Common Line Charges set forth in 3.8.5 preceding will apply per minute of use for Operator Transfer Service.

ACCESS SERVICE

6. Switched Access Service (Cont'd)

6.1 General (Cont'd)

6.1.3 Rate Categories (Cont'd)

(C) Chargeable Optional Features (Cont'd)

(2) Operator Transfer Services (Cont'd)

Operator Transfer Service charges, provided for in this tariff, are applied only to those calls actually transferred by the Telephone Company to the customer's operator.

(3) 800 Series Data Base Access Service (C) (x)

800 Series Data Base Access Service is provided to all customers in conjunction with FGC and FGD switched access service. (C) (x)
When a 1+800+NXX-XXXX call is originated by an end user, the Telephone Company will utilize the Signaling System 7 (SS7) network to query an 800 series data base to identify the customer to whom the call will be delivered and provide vertical features based on the dialed ten digits. The call will then be routed to the identified customer over FGC or FGD switched access. (C) (x)

A Basic or Vertical Feature Query charge, as set forth in 17.2.2(B) following, is assessed for each query launched to the data base which identifies the customer to whom the call will be delivered. The Basic Query provides the identification of the customer to whom the call will be delivered and includes area of service routing which allows routing of 800 series type calls by telephone companies to different inter-exchange carriers based on the Local Access Transport Area (LATA) in which the call originates. The Vertical Feature Query provides the same customer identification as the basic query and vertical features which may include: (1) call validation, (ensuring that calls originate from subscribed service areas); (2) POTS translation of 800 series numbers; (3) alternate POTS translation (which allows subscribers to vary the routing of 800 series type calls based on factors such as time of day, place or origination of the call, etc.); and (4) multiple carrier routing (which allows subscribers to route to different carriers based on factors similar to those in (3). (C) (x) (C) (x) (C) (x)

(x) Filed under the authority of Special Permission No. 96-212 of the Federal Communications Commission.

ACCESS SERVICE

6. Switched Access Service (Cont'd)

6.1 General (Cont'd)

6.1.3 Rate Categories (Cont'd)

(C) Chargeable Optional Features (Cont'd)

(3) 800 Series Data Base Access Service (Cont'd)

The description and application of this charge with respect to Feature Group C or Feature Group D is as set forth in 6.4.1(C) following.

(D)

(D)

ACCESS SERVICE

6. Switched Access Service (Cont'd)

6.1 General (Cont'd)

6.1.4 Special Facilities Routing (M)

Any customer may request that the facilities used to provide Switched Access Service be specially routed. The regulations for Special Facilities Routing (i.e., Avoidance, Diversity and Cable-Only) are set forth in Section 11 following.

6.1.5 Design Layout Report

At the request of the customer, the Telephone Company will provide to the customer the makeup of the facilities and services provided from the customer's premises to the first point of switching. This information will be provided in the form of a Design Layout Report. The Design Layout Report will be provided to the customer at no charge, and will be reissued or updated whenever these facilities are materially changed. (M)

ACCESS SERVICE

6. Switched Access Service (Cont'd)

6.2 Undertaking of the Telephone Company

In addition to the obligations of the Telephone Company set forth in Section 2 preceding, the Telephone Company has certain other obligations concerning only the provision of Switched Access Service. These obligations are as follows:

6.2.1 Network Management

The Telephone Company will administer its network to insure the provision of acceptable service levels to all telecommunications users of the Telephone Company's network services. Generally, service levels are considered acceptable only when both end users and customers are able to establish connections with little or no delay encountered within the Telephone Company network. The Telephone Company maintains the right to apply protective controls, i.e., those actions, such as call gapping, which selectively cancel the completion of traffic, over any traffic carried over its network, including that associated with a customer's Switched Access Service. Generally, such protective measures would only be taken as a result of occurrences such as failure or overload of Telephone Company or customer facilities, natural disasters, mass calling or national security demands. In the event that the protective controls applied by the Telephone Company result in the complete loss of service by the customer, the customer will be granted a Credit Allowance for Service Interruption as set forth in 2.4.4(B)(3) preceding.

ACCESS SERVICE

6. Switched Access Service (Cont'd)

6.2 Undertaking of the Telephone Company (Cont'd)

6.2.2 Transmission Specifications

Each Switched Access Service transmission path is provided with standard transmission specifications. There are three different standard specifications (Types A, B and C). The standard for a particular transmission path is dependent on the Feature Group, the Interface Group and whether the service is directly routed or via an access tandem. The available transmission specifications are set forth in 15.1.2 following. Data Transmission Parameters are also provided with each Switched Access Service transmission path. The Telephone Company will, upon notification by the customer that the data parameters set forth in 15.1.3 following are not being met, conduct tests independently or in cooperation with the customer, and take any necessary action to insure that the data parameters are met.

The Telephone Company will maintain existing transmission specifications on functioning service configurations installed prior to May 25, 1984, except that service configurations having performance specifications exceeding the standards set forth in 15.1.2 following will be maintained at the performance levels specified.

The transmission specifications concerning Switched Access Service are limits which, when exceeded, may require the immediate corrective action of the Telephone Company. The transmission specifications are set forth in 15.1.2 following. Acceptance limits are set forth in Technical Reference TR-NWT-000334. This Technical Reference also provides the basis for determining Switched Access Service maintenance limits . (x) (x)

Feature Group C and Feature Group D trunks equipped for Operator Transfer Service are subject to Feature Group C and Feature Group D transmission specifications, respectively, unless otherwise specified.

(x) Filed under authority of Special Permission No. 93-598 of the Federal Communications Commission.

ACCESS SERVICE

6. Switched Access Service (Cont'd)

6.2 Undertaking of the Telephone Company (Cont'd)

6.2.3 Provision of Service Performance Data

Subject to availability, end-to-end service performance data available to the Telephone Company through its own service evaluation routines, may also be made available to the customer based on previously arranged intervals and format. These data provide information on overall end-to-end call completion and non-completion performance, e.g., customer equipment blockage, failure results and transmission performance. These data do not include service performance data which are provided under other tariff sections, e.g., testing service results. If data are to be provided in other than paper format, the charges for such exchange will be determined on an individual case basis.

6.2.4 Testing

(A) Acceptance Testing

At no additional charge the Telephone Company will, at the customer's request, cooperatively test at the time of installation, the following parameters: loss, C-notched noise, C-message noise, 3-tone slope, d.c. continuity and operational signaling. When the Local Transport is provided with Interface Groups 2 through 10, and the Transport Termination is two-wire (i.e., there is a four-wire to two-wire conversion in Local Transport), balance parameters (equal level echo path loss) may also be tested.

ACCESS SERVICE

6. Switched Access Service (Cont'd)

6.2 Undertaking of the Telephone Company (Cont'd)

6.2.4 Testing (Cont'd)

(B) Routine Testing

At no additional charge, the Telephone Company will, at the customer's request, test after installation on an automatic or manual basis, 1004 Hz loss, C- message noise and Balance (Improved Return loss).

In the case of automatic testing, the customer shall provide remote office test lines and 105 test lines with associated responders or their functional equivalent.

The frequency of these tests will be that which is mutually agreed upon by the customer and the Telephone Company, but shall consist of not less than quarterly 1004 Hz Loss and C-message noise tests and an annual Balance test. Trunk test failures requiring customer participation for trouble resolution will be provided to the customer on an as-occurs basis.

Additional tests may be ordered as set forth in 13.3.1 following. Charges for these additional tests are set forth in 17.4.4 following.

ACCESS SERVICE

6. Switched Access Service (Cont'd)

6.2 Undertaking of the Telephone Company (Cont'd)

6.2.5 Determination of Number of Transmission Paths

For Feature Groups A and B, which are ordered on a per line or per trunk basis respectively, and Feature Groups (C) C and D when ordered on a per trunk basis the customer specifies the type of transport facilities and the number of channels in the order for service. (C)

For Tandem Switched Transport, the Telephone Company will determine the number of Switched Access Service transmission paths to be provided for the Switched Access Feature Group C and D busy hour minutes of capacity ordered. The number of transmission paths will be developed using the total busy hour minutes of capacity by type (as described in 6.1.1(B) preceding) for the end offices for each Feature Group ordered from a customer's designated premises. The total busy hour minutes of capacity by type (e.g., originating, terminating, IDDD, Operator) for the end office will be converted to transmission paths using standard Telephone Company traffic engineering methods. The number of transmission paths provided shall be the number required based on (1) the use of access tandem switches and end office switches, (2) the use of the end office switches only, or (3) the use of the tandem switches only. (C)

ACCESS SERVICE

6. Switched Access Service (Cont'd)

6.2 Undertaking of the Telephone Company (Cont'd)

6.2.6 Trunk Group Measurement Reports

Subject to availability, the Telephone Company will make available trunk group data in the form of usage in CCS, peg count and overflow, to the customer based on previously agreed to intervals.

ACCESS SERVICE

6. Switched Access Service (Cont'd)

6.3 Obligations of the Customer

In addition to the obligations of the customer set forth in Section 2 preceding, the customer has certain specific obligations pertaining to the use of Switched Access Service. These obligations are as follows:

6.3.1 Report Requirements

Customers are responsible for providing the following reports to the Telephone Company, when applicable.

(A) Jurisdictional Reports

When a customer orders Switched Access Service for both interstate and intrastate use, the customer is responsible for providing reports as set forth in 2.3.11 preceding. Charges will be apportioned in accordance with those reports. The method to be used for determining the interstate charges is set forth in 2.3.12 preceding.

(B) Code Screening Reports

When a customer orders service class routing, trunk access limitation or call gapping arrangements, it must report the number of trunks and/or the appropriate codes to be instituted in each end office or access tandem switch, for each of the arrangements ordered.

ACCESS SERVICE

6. Switched Access Service (Cont'd)

6.3 Obligations of the Customer (Cont'd)

6.3.2 Trunk Group Measurement Reports

With the agreement of the customer, trunk group data in the form of usage in CCS, peg count and overflow for its end of all access trunk groups, where technologically feasible, will be made available to the Telephone Company. These data will be used to monitor trunk group utilization and service performance and will be based on previously arranged intervals and format.

6.3.3 Supervisory Signaling

The customer's facilities shall provide the necessary on-hook, off-hook, answer and disconnect supervision.

6.3.4 Short Duration Mass Calling Requirements

When a customer offers service for which a substantial call volume is expected during a short period of time (e.g., 900 service media stimulated events), the customer must notify the Telephone Company at least 48 hours in advance of each peak period. Notification should include the nature, time, duration, and frequency of the event, an estimated call volume, and the telephone number(s) to be used.

On the basis of the information provided, the telephone Company may invoke network management controls, (e.g., call gapping and code blocking) to reduce the probability of excessive network congestion. The Telephone Company will work cooperatively with the customer to determine the appropriate level of such control.

ACCESS SERVICE

6. Switched Access Service (Cont'd)

6.4 Rate Regulations

This section contains the specific regulations governing the rates and charges that apply for Switched Access Service.

6.4.1 Description and Application of Rates and Charges

There are two types of rates and charges that apply to Switched Access Service; recurring (usage and flat rates) and nonrecurring charges. These rates and charges are applied differently to the various rate elements as set forth in (C) following.

(A) Recurring Rates

(1) Usage Rates for Switched Access Service are rates that apply on a per access minute or a per call basis. Access minute charges and per call charges are accumulated over a monthly period.

(2) Flat Rates for Switched Access Service are rates that apply on a per month per rate element basis.

(B) Nonrecurring Charges

Nonrecurring charges are one-time charges that apply for a specific work activity (i.e., installation or change to an existing service). The types of nonrecurring charges that apply for Switched Access Service are: installation of service, Interim NXX Translation optional feature and service rearrangements. These charges, with the exception of the Interim NXX Translation optional feature, are in addition to the Access Order Charge as specified in 17.4.1(A) following. (C) (C)

ACCESS SERVICE

6. Switched Access Service (Cont'd)

6.4 Rate Regulations (Cont'd)

6.4.1 Description and Application of Rates and Charges (Cont'd)

(B) Nonrecurring Charges (Cont'd)

(1) Installation of Service

(D)

(D)

(N)

A Local Transport nonrecurring installation charge, as set forth in 17.2.1(A) following, will be applied at the serving wire center for each Entrance Facility installed. Additionally, a nonrecurring trunk activation charge as set forth in 17.2.1(E) following, will be applied at each end office when ordered to the end office on a per order per end office basis or at the tandem when ordered to the tandem for each group of 24 Direct Trunked Transport trunks or fraction thereof that is activated (i.e., designated by the customer to be used to carry switched access). A maximum of 24 trunks can be activated on a DS1 facility and a maximum of 672 trunks can be activated on a DS3 facility.

For example, if a customer orders a DS1 Entrance Facility and requests activation of 18 of the available circuits, the customer will be charged one Local Transport High Capacity DS1 Installation nonrecurring charge at the serving wire center and one Direct Trunked Transport Activated nonrecurring charge at the end office. If at a later date the customer requests the activation of three more circuits, the customer will then be charged an additional Direct Trunked Transport Activated nonrecurring charge. These charges are in addition to the Access Order charge as specified in 17.4.1(A) following .

(N)

ACCESS SERVICE

6. Switched Access Service (Cont'd)

6.4 Rate Regulations (Cont'd)

6.4.1 Description and Application of Rates and Charges (Cont'd)

(B) Nonrecurring Charges (Cont'd)

(2) Interim NXX Translation Optional Feature (M)

This nonrecurring charge applies to the initial order for the installation of the Interim NXX Translation optional feature with Feature Group C or Feature Group D Switched Access Service and for each subsequent order received to add or change NXX translation codes. This charge, if applicable, applies whether this optional feature is installed coincident with or at any time subsequent to the installation of Switched Access Services. This charge is applied by the Telephone Company per order, per LATA or Market Area. When it is necessary for multiple telephone companies to provide the translation function, the nonrecurring charge is assessed only by the Telephone Company that provides the final translation function which identifies the customer's traffic and this traffic is then delivered to the customer's point of termination without any further translation. (M)

ACCESS SERVICE

6. Switched Access Service (Cont'd)

6.4 Rate Regulations (Cont'd)

6.4.1 Description and Application of Rates and Charges (Cont'd)

(B) Nonrecurring Charges (Cont'd)

(3) Service Rearrangements

All changes to existing services other than changes involving administrative activities and the off-hook supervisory signaling of FGA Access Services, will be treated as a discontinuance of the existing service and an installation of a new service. The nonrecurring charge described in (1) preceding will apply for this work activity. Moves that change the physical location of the point of termination are described and charged for as set forth in 6.4.4 following.

For conversion of FGD trunks to SS7 Signaling reconfiguration, charges apply as set forth in Section 17.2.1(C).

- If, due to technical limitations of the Telephone Company, a customer could not combine its Interim NXX traffic with its other trunk side Switched Access Services, no charge shall apply to combine these trunk groups when it becomes technically possible.

ACCESS SERVICE

6. Switched Access Service (Cont'd)

6.4 Rate Regulations (Cont'd)

6.4.1 Description and Application of Rates and Charges (Cont'd)

(B) Nonrecurring Charges (Cont'd)

(3) Service Rearrangements (Cont'd)

Administrative changes will be made without charge(s) to the customer. Administrative changes are as follows:

- Change of customer name;
- Change of customer or customer's end user premises address when the change of address is not a result of a physical relocation of equipment;
- Change in billing data (name, address, or contact name or telephone number);
- Change of agency authorization;
- Change of customer circuit identification;
- Change of billing account number;
- Change of customer test line number;
- Change of customer or customer's end user contact name or telephone number; and
- Change of jurisdiction.

Other changes made without charge to the customer are as follows:

- Changes and additions to existing Switched Access Services which are necessary due to Telephone Company initiated network reconfigurations, and required to provide the same grade of service to the customer that existed prior to the reconfiguration. Charges will apply to those changes and additions which are in excess of those required to provide the same grade of service and/or capacity. Grade of service will be as determined by industry standard engineering tables; and

- When a customer requests a change of trunks from tandem-switched transport to direct-trunked transport or from direct-trunked transport to tandem-switched transport or requests to rearrange switched access services between lower capacity and higher capacity facilities (e.g. voice grade to/from DS1 or DS1 to/from DS3), the non recurring charges set forth in (1) preceding do not apply providing : (N) (x) (N) (x)

- the change is ordered no later than July 1, 1994, and (C) (x)
- the change is completed no later than October 1, 1994, and (C) (x)
- the orders to disconnect existing trunks and to connect the new trunks are placed at the same time, and the number of installed trunks does not exceed the number of trunks disconnected. If the number of installed trunks exceeds the number of trunks onnected, all non-recurring charges will apply to the excess trunks unless the customer provides justification based upon standard engineering methods to show that the additional capacity is required to maintain the same level of service.

(x) Issued pursuant to Special Permission No. 93-1216 of the Federal Communications Commission.

ACCESS SERVICE

6. Switched Access Service (Cont'd)

6.4 Rate Regulations (Cont'd)

6.4.1 Description and Application of Rates and Charges (Cont'd)

(B) Nonrecurring Charges (Cont'd)

(3) Service Rearrangements (Cont'd)

- When a customer requests a change of trunks from tandem-switched transport to direct-trunked transport or orders the disconnection of overprovisioned trunks, providing: (N) (x)
  - the change is ordered anytime between June 17, 1997 and December 31, 1998 and
  - the change is completed no later than March 31, 1999 and
  - the orders to disconnect existing trunks and to connect the new trunks are placed at the same time. (N) (x)

(x) Issued in compliance with the Federal Communications Commission's First Report and Order, In the Matter of Access Charge Reform, CC Docket No. 96-262 (FCC 97-158), released May 16, 1997, paragraph 176.

ACCESS SERVICE

6. Switched Access Service (Cont'd)

6.4 Rate Regulations (Cont'd)

6.4.1 Description and Application of Rates and Charges (Cont'd)

(B) Nonrecurring Charges (Cont'd)

(3) Service Rearrangements (Cont'd)

Changes to the point in time when the off-hook supervisory signal is provided in the originating call sequence i.e., when the off-hook supervisory signal is changed from being provided by the customer's equipment before the called party answers to being forwarded by the customer's equipment when the called party answers or vice versa, are subject to the Access Order Charge as set forth in 17.4.1(A) following.

For additions, changes or modifications to an optional feature which has a separate nonrecurring charge, that nonrecurring charge will apply.

For additions, changes, or modifications to optional features that do not have their own separate nonrecurring charges, an Access Order Charge as set forth in 17.4.1(A) following will apply. When an optional feature is not required on each transmission path, but rather for an entire transmission path group, an end office or an access tandem switch, only one such charge will apply (*i.e.*, it will not apply per transmission path).

For conversion of FGC and FGD trunks from multifrequency address signaling to SS7 signaling or from SS7 signaling to multifrequency address signaling, nonrecurring charges will apply as set forth in 17.2.1(C).

(D)

(D)

(C) Application of Rates

Rates are applied either as premium or non-premium rates.

The application of these rates is dependent upon the Feature Group, type of Entrance Facility, type of transport (*e.g.*, Direct Trunked Transport, Tandem Switched Transport, type of Multiplexing) and the availability of equal access capabilities in the end office to which the service is provided.

ACCESS SERVICE

6. Switched Access Service (Cont'd)

6.4 Rate Regulations (Cont'd)

6.4.1 Description and Application of Rates and Charges (Cont'd)

(C) Application of Rates (Cont'd)

In those instances where an SSP equipped end office is capable of handling 800 SAC traffic on a direct trunked basis, and the customer has direct trunked transport facilities in place at the end office, but the end office is incapable of handling 888 SAC traffic on a direct trunked basis, a full credit will be provided for Tandem Switched Transport Charges associated with FGC and FGD service for 888 SAC traffic delivered at the tandem. (N) (x)

This results in all 800 series traffic being rated as direct trunked transport regardless of whether the SSP equipped end office is capable of handling 888 SAC traffic on a direct trunked basis.

The credit will expire when 888 SAC SSP functionality is implemented in the end office. (N) (x)

(x) Filed under the authority of Special Permission No. 96-212 of the Federal Communications Commission.

ACCESS SERVICE

6. Switched Access Service (Cont'd)

6.4 Rate Regulations (Cont'd)

6.4.1 Description and Application of Rates and Charges (Cont'd)

(C) Application of Rates (Cont'd)

The following rules provide the basis for applying the rates and charges:

(1) Premium Rates

Premium rates apply to all FGC access minutes when the service is provided to customers which furnish interstate MTS/WATS, and to all access minutes that originate or terminate at end offices equipped with equal access (i.e., FGD) capabilities. Premium rates also apply to FGB and FGD access minutes that originate or terminate at a Wireless Switching Center (WSC) (C)
that is directly connected to a Telephone Company access tandem office. In addition, premium rates apply to FGA and (C)
FGB access minutes when utilized in the provision of MTS/WATS service.

(x)
(x)
(x)

In addition, premium rates always apply to the following Local Transport rate elements:

- Entrance Facility
- Direct Trunked Facility
- Direct Trunked Termination
- Multiplexing
- Tandem Switched Facility
- Tandem Switched Termination
- Tandem Switching (x)

(x) Issued pursuant to Special Permission No. 93-1216 of the Federal Communications Commission.

ACCESS SERVICE

6. Switched Access Service (Cont'd)

6.4 Rate Regulations (Cont'd)

6.4.1 Description and Application of Rates and Charges (Cont'd)

(C) Application of Rates (Cont'd)

(2) Non-premium Rates

Non-premium rates (i.e., discounted access minute rates) apply to all FGA and FGB access minutes (measured or assumed) originating or terminating in an end office which is not equipped with equal access capabilities.

In addition, non-premium rates apply to FGC access minutes originating in an end office which is not equipped with equal access capabilities when the FGC service is used in conjunction with the Interim NXX Translation optional feature or 800 Series Data Base services by customers who do not furnish interstate MTS/WATS. (C) (x)

Non-premium rates do not apply to the following Local Transport rate elements:

- Entrance Facility
- Direct Trunked Facility
- Direct Trunked Termination
- Multiplexing
- Tandem Switched Facility
- Tandem Switched Termination
- Tandem Switching

(x) Filed under the authority of Special Permission No. 96-212 of the Federal Communications Commission.

ACCESS SERVICE

6. Switched Access Service (Cont'd)

6.4 Rate Regulations (Cont'd)

6.4.1 Description and Application of Rates and Charges (Cont'd)

(C) Application of Rates (Cont'd)

(3) Transition Billing Arrangement

When FGA, or FGB Switched Access Service, except as set forth in (1) preceding, provided to an entry switch (i.e., dial tone office for FGA and access tandem for FGB) has usage originating from and/or terminating at both end offices that have been converted to equal access and end offices that have not been converted, the premium and non-premium rates will apply in the following manner:

(a) All access minutes that originate from or terminate at the equal access end office(s) will be billed at premium rates. Access minutes that originate from or terminate at end offices not equipped with equal access capabilities, hereinafter referred to as non-premium access minutes, will continue to be billed at non-premium rates. Non-premium rates will apply as follows depending on the type of service.

(i) For FGA and FGB services, the number of non-premium access minutes to be billed at non-premium rates is derived by subtracting the number of premium rated access minutes from the total number of access minutes.

(ii) Premium access minutes will be determined as set forth in (b) following.

ACCESS SERVICE

6. Switched Access Service (Cont'd)

6.4 Rate Regulations (Cont'd)

6.4.1 Description and Application of Rates and Charges (Cont'd)

(C) Application of Rates (Cont'd)

(3) Transition Billing Arrangement (Cont'd)

(b) The number of access minutes to be rated as premium access minutes is determined as follows:

(i) Where end office specific usage data is available, premium rates apply to the measured access minutes originating from or terminating at the equal access end office(s).

(ii) Where end office specific usage data is not available for originating and/or terminating FGA or FGB, the total originating and/or terminating usage will be measured or assumed usage at the entry switch as set forth respectively in 6.5.4 and 6.6.4 following. Originating and/or terminating usage will then be apportioned between premium and non-premium access minutes.

ACCESS SERVICE

6. Switched Access Service (Cont'd)

6.4 Rate Regulations (Cont'd)

6.4.1 Description and Application of Rates and Charges (Cont'd)

(C) Application of Rates (Cont'd)

(3) Transition Billing Arrangement (Cont'd)

(b) (Cont'd)

(ii) (Cont'd)

Such apportionment will be based on the ratio of the number of subscriber lines in the access area (i.e., local calling areas for FGA originating minutes, LATA for FGA terminating minutes and end offices subtending the access tandem for FGB minutes) of the first point of switching that are served by equal access end offices to the total number of subscriber lines in that access area. The ratio thus developed is applied to the total measured or assumed originating FGA usage, terminating FGA usage, originating FGB usage or terminating FGB usage, as applicable, to determine the usage to be billed at premium rates, unless adjusted as set forth in (iii) following.

ACCESS SERVICE

6. Switched Access Service (Cont'd)

6.4 Rate Regulations (Cont'd)

6.4.1 Description and Application of Rates and Charges (Cont'd)

(C) Application of Rates (Cont'd)

(3) Transition Billing Arrangement (Cont'd)

(b) (Cont'd)

(ii) (Cont'd)

The ratios used to calculate the premium usage will be determined on a quarterly basis. The ratios to be used for the succeeding quarter will be provided to the customer with the last bill rendered in the quarter or mailed separately within five working days after the first day of the new quarter (i.e., January, April, July and October).

For purposes of administering this provision: (1) subscriber lines are defined as exchange service lines, Centrex lines and Centrex-type lines provided by the Telephone Company under its local and/or general exchange service tariff; (2) the access area is defined as the local calling area of the dial tone office for originating FGA, the entire LATA for terminating FGA, and all end offices subtending the access tandem for originating and terminating FGB; and (3) the local calling area of the dial tone office is as defined in the Telephone Company's local and/or general exchange service tariff.

ACCESS SERVICE

6. Switched Access Service (Cont'd)

6.4 Rate Regulations (Cont'd)

6.4.1 Description and Application of Rates and Charges (Cont'd)

(C) Application of Rates (Cont'd)

(3) Transition Billing Arrangement (Cont'd)

(b) (Cont'd)

(iii) Where FGD Switched Access Service is provided to a customer in an end office(s) where that customer's FGA or FGB premium access minutes have been determined in accordance with (ii) preceding, such premium access minutes will be adjusted in the following manner. For each FGD access minute originating from or terminating at that end office, excluding those FGD minutes of use associated with Operator Transfer Service, the originating or terminating FGA or FGB premium access minutes determined as set forth in (ii) preceding will be reduced on a one for one basis, but in no event shall the reduction exceed the total number of FGA or FGB premium access minutes originating from or terminating at that end office. For each FGA or FGB premium minute of use reduction in either the originating or terminating direction, a corresponding originating or terminating non-premium minute of use will be apportioned to those end offices in the access area that are non-equal. Such apportionment will be based upon a ratio of the number of subscriber lines in each non-equal end office to the total subscriber lines that are served by all non-equal end offices in the access area. The customer will be billed for the revised number of premium or non-premium access minutes. (T) (T) (T) (T) (T)

ACCESS SERVICE

6. Switched Access Service (Cont'd)

6.4 Rate Regulations (Cont'd)

6.4.1 Description and Application of Rates and Charges (Cont'd)

(C) Application of Rates (Cont'd)

(4) Unmeasured FGA and FGB Access Services

Where originating and/or terminating measurement capability does not exist for Feature Group A or Feature Group B Switched Access Services provided to the first point of switching, the number of access minutes that will be assumed are as set forth following in 6.5.4 and 6.6.4 respectively.

(5) Notice of Equal Access Conversion

The Telephone Company will provide written notification to all access customers of record within a particular LATA that an end office in that LATA is scheduled to be converted to an equal access end office. This notification will be sent, via certified U.S. Mail, to each customer of record in the LATA where the conversion is scheduled to occur, at least six months in advance of the conversion date.

The customer will have the choice of converting all or part of the existing services to equal access (i.e., Feature Group D) or retaining the existing services. The conversion of existing services will be at no charge provided the order to convert such services to Feature Group D is received as set forth in 6.4.3 following. Premium rates will apply to the total access minutes beginning on the actual conversion date, whether the customer chooses to convert to FGD or retain existing services.

ACCESS SERVICE

6. Switched Access Service (Cont'd)

6.4 Rate Regulations (Cont'd)

6.4.1 Description and Application of Rates and Charges (Cont'd)

(C) Application of Rates (Cont'd)

(6) Common Channel Signaling/Signaling System 7 (CCS/SS7) Network Connection Service (T)

The CCS/SS7 Network Connection is comprised of a Signaling Mileage Facility charge, a Signaling Mileage Termination charge, a Signaling Entrance Facility charge, and a Signaling Transfer Point (STP) Port charge.

The Signaling Mileage Facility charge is assessed on a per facility per mile basis. The Signaling Mileage Termination charge is assessed on a per termination basis (i.e., at each end of the Signaling Mileage Facility). When the Signaling Mileage Facility mileage measurement is zero, Signaling Mileage Termination charges do not apply.

The Signaling Entrance Facility charge is assessed on a per facility basis for the connection between the customer's designated premises (Signaling Point of Interface) and the serving wire center of that premises.

The STP Port charge is assessed on a per port basis for each termination of a Signaling Mileage Facility at an STP.

(7) 800 Series Data Base Access Service (C) (x)

A Basic Query or Vertical Feature Query charge applies for each query that is launched to an 800 series data base and identifies the customer to whom the call will be delivered. Query charges, as set forth in 17.2.2(B), will only be applied by those companies whose wire centers are identified as assessing query charges in the NATIONAL EXCHANGE CARRIER ASSOCIATION, INC. TARIFF F.C.C. NO. 4. (C) (x)

(x) Filed under the authority of Special Permission No. 96-212 of the Federal Communications Commission.

ACCESS SERVICE

6. Switched Access Service (Cont'd)

6.4 Rate Regulations (Cont'd)

6.4.1 Description and Application of Rates and Charges (Cont'd)

(C) Application of Rates (Cont'd)

(7) 800 Series Data Base Access Service (Cont'd) (C) (x)

When Feature Group C or Feature Group D switched access service is used for the provision of 800 Series Data Base Access Service and the total minutes of use and/or count of queries can be determined for each customer at a tandem or SSP but can not be determined by individual end office, an allocation method will be utilized to determine minutes of use and/or queries by end office and customer. For each end office a ratio will be developed and applied against the total minutes of use and/or count of queries for a given customer as determined by the tandem or SSP. These ratios will be developed by dividing the unidentified originating 800 series type minutes of use at an end office by the total unidentified originating minutes of use in all end offices subtending the tandem or SSP. For example, assume: (C) (x)

- Three end offices (EO-1, EO-2, and EO-3) subtend a tandem (T)

  EO-1 measures 2,000 min. of 800 series type use (C) (x)
  EO-2 measures 3,000 min. of 800 series type use (C) (x)
  EO-3 measures 5,000 min. of 800 series type use (C) (x)
  10,000 TOTAL

- The tandem delivers 800 series type usage to two customers: (C) (x)

  IC-A has 4,000 minutes of use
  IC-B has 6,000 minutes of use

- The allocation ratio for EO-1 is 20%

  2,000/10,000

- The minutes of use to be billed by EO-1 are

  800 to IC-A (20% X 4,000)
  1,200 to IC-B (20% X 6,000)
  2,000 TOTAL

(x) Filed under the authority of Special Permission No. 96-212 of the Federal Communications Commission.

ACCESS SERVICE

6. Switched Access Service (Cont'd)

6.4 Rate Regulations (Cont'd)

6.4.1 Description and Application of Rates and Charges (Cont'd)

(C) Application of Rates (Cont'd)

(8) Shared Transport (N)

Shared Transport refers to a rate application that is applicable only when the customer orders High Capacity Direct Trunked Transport between a serving wire center and a Telephone Company hub where the Telephone Company performs multiplexing/de-multiplexing functions and the same customer then orders the derived channels as Direct Trunked Transport and Tandem Switched Transport. When the same customer also orders Special Access Service to be provided over this same high capacity facility, this service is considered to be Mixed Use and the regulations set forth in 7.2.7 following must first be applied to separate the portion to be charged as Switched Access Service from the portion to be charged as Special Access Service.

Except as noted above, the switched Access Service will be ordered, provided and rated as Direct Trunked Transport (i.e., Direct Trunked Facility and Direct Trunked Termination). As each derived channel is activated for Tandem switched Transport, the High Capacity Direct Trunked Transport and Multiplexing rates will be reduced accordingly (e.g., 1/24th for a High Capacity DS1 service, 1/672nd for a High Capacity DS3 service, etc.). Tandem Switched Transport rates and charges, as set forth in 17.2.2 following, will apply for each channel that is used to provide the Tandem Switched Transport. (N)

ACCESS SERVICE

6. Switched Access Service (Cont'd)

6.4 Rate Regulations (Cont'd)

6.4.1 Description and Application of Rates and Charges (Cont'd)

(C) Application of Rates (Cont'd)

(8) Shared Transport (Cont'd) (N)

The following example, while not all inclusive, illustrates the application of the Shared Transport provisions cited above and the Mixed Use provision set forth in 7.2.7 following. The sample calculations explained below depict the application of charges as they apply to the shared facilities only. All other rate elements that would apply to this example (e.g., Residual Interconnection, Carrier Common Line, End Office, Voice Grade Direct Trunked Transport from EO-B to the Tandem, Voice Grade Channel Mileage from EO-C to the Tandem, etc.) are billed as described elsewhere in this tariff.

Assume:

The customer orders:

-3 tandem routed Switched Access trunks to End Office-A (EO-A)

-4 direct routed Switched Access trunks to End Office-B (EO-B)

-12 Voice Grade Special Access channels to End Office-C (EO-C)

-1 DS1 facility between its POT and the Tandem/Multiplexer

-Usage at EO-A is 10,000 Minutes of Use (MOU) (N)

ACCESS SERVICE

6. Switched Access Service (Cont'd)

6.4 Rate Regulations (Cont'd)

6.4.1 Description and Application of Rates and Charges (Cont'd)

(C) Application of Rates (Cont'd)

(8) Shared Transport (Cont'd) (N)

Calculation of Charges POT to Serving Wire Center

Since this facility carries both Switched and Special Access Services, the Mixed Use provisions set forth in 7.2.7 following must be applied. This service is initially ordered and rated as a Special Access DS1 High Capacity Channel Termination (DS1-CT). This Special Access Charge is then reduced for each activated Switched Access Service. High Capacity DS1 Entrance Facility (DS1-EF) charges apply for the portion of this service that is activated for Switched Access Service.

DS1-CT charge=DS1-CT rate x (capacity of a DS1 minus the number of activated Switched Access Services)/(capacity of a DS1)
= DS1-CT rate x (24 - 7)/(24)
= DS1-CT rate x (17/24)

DS1-EF charge=DS1-EF rate x (number of activated Switched Access Services)/(capacity of a DS1)

=DS1-EF rate x (7/24) (N)

ACCESS SERVICE

6. Switched Access Service (Cont'd)

6.4 Rate Regulations (Cont'd)

6.4.1 Description and Application of Rates and Charges (Cont'd)

(C) Application of Rates (Cont'd)

(8) Shared Transport (Cont'd) (N)

Calculation of Charges Facility from Serving Wire Center to Tandem and Multiplexer

Since the interoffice facility and the multiplexer both carry Switched and Special Access Services, it must first be apportioned between these two categories by applying the Mixed Use provisions set forth in 7.2.7 following. Using the same ratios calculated above, the Special Access DS1 High Capacity Channel Mileage Facility (DS1-CMF), Channel Mileage Termination (DS1-CMT), and Multiplexer (Spcl.-MUX) charges are:

DS1-CMF=DS1-CMF rate x airline miles between Tandem/Multiplexer and Serving Wire Center x (17/24)

DS1-CMT=DS1-CMT rate x 2 terminations x (17/24)

Spcl.-MUX=DS1 to Voice Grade multiplexer rate x (17/24)

After applying the Mixed Use provisions to determine the Switched Access portion of these facilities, the Switched Access Facilities must then be apportioned between direct routed and tandem routed. This is accomplished by subtracting the portion of channels used for tandem routing from the portion of Switched Access channels. The remaining portion of channels are considered direct routed. (N)

ACCESS SERVICE

6. Switched Access Service (Cont'd)

6.4 Rate Regulations (Cont'd)

6.4.1 Description and Application of Rates and Charges (Cont'd)

(C) Application of Rates (Cont'd)

(8) Shared Transport (Cont'd) (N)

Calculation of Charges Facility from Serving Wire Center to Tandem and Multiplexer

The Direct Trunked Facility (DS1-DTF), Direct Trunked Termination (DS1-DTT) and Switched Access Multiplexer (Sw-MUX) charges are:

DS1-DTF = DS1-DTF rate x airline miles between Tandem/Multiplexer and Serving Wire Center x ((number of activated Switched Access Services/capacity of a DS1) minus (number of channels activated for Tandem Switched Transport/capacity of a DS1))
= DS1-DTF rate x miles x ((7/24) - (3/24))
= DS1-DTF rate x miles x (4/24)

DS1-DTT = DS1-DTT rate x 2 terminations x same ratio of (4/24)

Sw.-MUX = DS1 to Voice Grade multiplexer rate x same ratio of (4/24)

Tandem Routing Charges (EO-A to Serving Wire Center)

No adjustments are used to calculate the Tandem Switched Facility (TSF), Tandem Switched Termination (TST), or Tandem Switching charges. They are calculated as follows:

TSF = TSF rate x airline miles between EO-A and the serving wire center x 10,000 MOU

TST = TST rate x 2 termination x 10,000 MOU

TS = TS rate x 10,000 MOU (N)

ACCESS SERVICE

6. Switched Access Service (Cont'd)

6.4 Rate Regulations (Cont'd)

6.4.2 Minimum Monthly Charge

Switched Access Service is subject to a minimum monthly charge. The minimum charge applies for the total capacity provided. The minimum monthly charge is calculated as follows.

For usage rated Local Transport, Local Switching and Information Surcharge rate elements, the minimum monthly charge is the sum of the recurring charges set forth in 17.2.2 and 17.2.3 following for either the actual measured usage or the assumed usage prorated to the number of days or major fraction of days based on a 30 day month. (C)

For flat rated Local Transport rate elements, the minimum monthly charge is the sum of the recurring charges set forth in 17.2.2 following prorated to the number of days or major fraction of days on a 30 day month. (N) (N)

ACCESS SERVICE

6. Switched Access Service (Cont'd)

6.4 Rate Regulations (Cont'd)

6.4.3 Change of Switched Access Service Arrangements

Changes from one type of Feature Group to another will be treated as a discontinuance of one type of service and a start of another. Nonrecurring charges will apply, with one exception. When a customer upgrades a Feature Group A or B service to a Feature Group D service and when Feature Group C is upgraded to Feature Group D coincident with the availability of Feature Group D in an end office, the nonrecurring charges associated with the equal access conversion will not apply. Non-recurring charges for other associated service requests, (e.g., a simultaneous change from multi-frequencies, address signalling to SS7 signalling) will apply. Minimum period obligations will not change, i.e., the time elapsed in the existing minimum period obligation will be credited to the minimum period obligations for FGD service, subject to the following limitations. (N) (N)

In order to avoid the imposition of nonrecurring charges a customer which is a participant in the presubscription allocation process (i.e., is on the presubscription ballot) must:

- submit its order to disconnect Feature Group A and/or B within 30 days after the date the results of the final allocation of customers in an end office are actually received by the customer, and

- make the effective date for disconnection of the Feature Group A and/or B Access Services no later than 60 days after the final allocation results are received by the customer.

A customer which is not a participant in the allocation process (i.e., is not on the presubscription ballot) is subject to the same rules preceding. The time frames for the non-participating customer(s) are the same as those which apply to the last customer to receive the results of the final allocation of customers in an end office who is a participant in the allocation process. For all other changes from one type of Feature Group to another, new minimum period obligations will be established.

ACCESS SERVICE

6. Switched Access Service (Cont'd)

6.4 Rate Regulations (Cont'd)

6.4.4 Moves

A move involves a change in the physical location of one of the following:

- The point of termination at the customer designated premises
- The customer designated premises

The charges for the move are dependent on whether the move is to a new location within the same building or to a different building.

(A) Moves Within the Same Building

When the move is to a new location within the same building, the charge for the move will be an amount equal to one half of the installation nonrecurring charge for the capacity affected. This charge is in addition to the Access Order Charge as specified in 17.4.1(A) following. There will be no change in the minimum period requirements.

(B) Moves to a Different Building

Moves to a different building will be treated as a discontinuance and start of service and all associated nonrecurring charges will apply. New minimum period requirements will be established for the new service. The customer will also remain responsible for satisfying all outstanding minimum period charges for the discontinued service.

6.4.5 Local Information Delivery Services

Calls over Switched Access Service in the terminating direction to certain community information services will be rated under the applicable rates for Switched Access Service as set forth in 17.2 following. In addition, the charges per call as specified under the Telephone Company's local and/or general exchange service tariffs, e.g., 976 (DIAL-IT) Network Services, will also apply.

ACCESS SERVICE

6. Switched Access Service (Cont'd)

6.4 Rate Regulations (Cont'd)

6.4.6 Mileage Measurement

The mileage to be used to determine the monthly rate for Local Transport is calculated on the airline distance. When Direct Trunked Transport is ordered between the serving wire center and the end office, mileage is normally measured (C) in one segment from the serving wire center to the end office. When Direct Trunked Transport is ordered between a serving wire center and a tandem and (C) Tandem Switch Transport is ordered between the tandem and the end office, mileage is calculated separately for each segment. Exceptions to these methods are as set forth in (B) through (I) following. For SS7 signaling, the mileage to be used to determine the monthly rate for the Signaling Mileage Facility is calculated on the airline distance between the serving wire center associated with the customer's designated premises (Signaling Point of Interface) and the Telephone Company wire center providing the STP Port.

Where applicable, the V&H coordinates method is used to determine mileage. This method is set forth in the NATIONAL EXCHANGE CARRIER ASSOCIATION, INC. TARIFF F.C.C. NO. 4 for Wire Center Information (V&H coordinates).

Mileage rates are as set forth in 17.2.2 following. To determine the rate to be billed, first compute the airline mileage using the V&H coordinates method. If the calculation results in a fraction of a mile, always round up to the next whole mile before determining the mileage and applying the rates. Then multiply the mileage by the appropriate rate.

Exceptions to the mileage measurement rules are as follows:

ACCESS SERVICE

6. Switched Access Service (Cont'd)

6.4 Rate Regulations (Cont'd)

6.4.6 Mileage Measurement (Cont'd)

(B) Feature Group A - Originating Usage

Direct Trunked Transport Mileage for premium and non-premium rated access minutes in the originating direction over Feature Group A Switched Access Service will be calculated on an airline basis, using the V&H coordinates method. The mileage measurement will be between the first point of switching (end office switch where the Feature Group A switching dial tone is provided) and the customer's serving wire center for the Switched Access Service provided.

(D)

(D)

(C) Feature Group A Terminating Usage

The Local Transport mileage for terminating Feature Group A Switched Access Service will be measured in two segments. Direct Trunked Transport mileage will be measured between the customer's serving wire center and the first point of switching (i.e., the end office switch where the Feature Group A switching dial tone is provided). Tandem Switched Transport mileage will be measured between the first point of switching and the terminating end office.

ACCESS SERVICE

6. Switched Access Service (Cont'd)

6.4 Rate Regulations (Cont'd)

6.4.6 Mileage Measurement (Cont'd)

(D) Feature Groups B, C and D - Alternate Traffic Routing

When the Alternate Traffic Routing optional feature is provided with Feature Groups B, C and D, the Local Transport access minutes will be apportioned between the two trunk groups used to provide this feature. Such apportionment will be made using: (1) actual minutes of use if available, (2) standard Telephone Company traffic engineering methodology and will be based on the last trunk CCS desired for the high usage group, as described in 6.9.1(L) following (Alternate Traffic Routing), and the total busy hour minutes of capacity ordered to the end office, when the feature is provided at an end office switch, or (3) an apportionment mutually agreed to by the Telephone Company and the customer. This apportionment will serve as the basis for Local Transport calculation. (C) (C)

(E) Feature Group C - Multiple CDPs

When terminating Feature Group C Switched Access Service is provided from multiple customer designated premises to an end office not equipped with measurement capabilities, the total Local Transport access minutes for that end office will be apportioned among the trunk groups accessing the end office on the basis of the individual busy hour minutes of capacity ordered for each of those trunk groups. This apportionment will serve as the basis for Local Transport mileage calculation.

ACCESS SERVICE

6. Switched Access Service (Cont'd)

6.4 Rate Regulations (Cont'd)

6.4.6 Mileage Measurement (Cont'd)

(F) Feature Groups A, B, C and D - WATS

The Local Transport Facility for Feature Groups A, B, C and D Switched Access Service connected with Special Access Service at a WATS Serving Office will be measured between the WATS Serving Office (when measured access minutes of use are used) or between the Feature Group A entry switch (when assumed minutes of use are used) and the serving wire center for the customer designated premises.

(G) Feature Groups B and D - WSCs Directly Interconnected to Access Tandems (C)

The Local Transport mileage for Feature Groups B and D switched access service provided to Wireless Switching Centers (WSCs) directly (C) interconnected to a Telephone Company access tandem office will be determined on an airline basis, using the V&H coordinate method. The mileage will be measured between the customer's serving wire center and the Telephone Company access tandem office to which the WSC is (C) interconnected.

(H) Feature Groups B, C, and D - Remote Offices

The Local Transport mileage for Feature Groups B, C, and D Switched Access Service provided to a Remote Office will be measured in multiple segments. When the facility is directly trunked to the Host Office, Direct Trunked Facility mileage will be measured between the customer's serving wire center and the Host Office, and Tandem Switched Facility mileage will be measured between the Host Office and the Remote Office. The Tandem Switching charge will not apply.

When the facility is directly trunked to a tandem, Direct Trunked Facility will be measured from the serving wire center to the tandem, Tandem Switched Facility will be measured from the tandem to the host, and another segment of Tandem Switched Facility will be measured from the host to the remote. A Tandem Switching charge would be pplicable at the tandem.

ACCESS SERVICE

6. Switched Access Service (Cont'd)

6.4 Rate Regulations (Cont'd)

6.4.6 Mileage Measurement (Cont'd)

(H) Feature Groups B, C, and D - Remote Offices (Cont'd) (N)

When service to the remote is ordered as only Tandem Switched Facility, mileage will be separately measured between the serving wire center and the host and between the host and the end office. The Tandem Switching charge would be applicable at the tandem.

(I) Use of Telephone Company Hub

When multiplexing is performed at Telephone Company Hubs, mileage is computed and rates applied separately for each segment of the Local Transport Direct Trunked Facility (i.e., customer serving wire center to Hub, Hub to Hub, and/or Hub to end office). (N)

(D)

(D)

ACCESS SERVICE

6. Switched Access Service (Cont'd)

6.4 Rate Regulations (Cont'd)

6.4.7 Mixed Use

Mixed use occurs when Switched Access Service and Special Access Service are provided over the same High Capacity service through a common interface. The regulations governing the provision of Mixed Use Facilities are set forth in 5.2.4 preceding and 7.2.7 following.

The Telephone Company will designate the first point(s) of switching and routing to be used where equal access traffic is provided through a centralized equal access arrangement. Those Telephone Company offices providing equal access through centralized arrangements are identified in NATIONAL EXCHANGE CARRIER ASSOCIATION, INC . TARIFF F.C.C. NO. 4. (x) (x)

6.4.8 Message Unit Credit for Feature Group A

Calls from end users to the seven digit local telephone numbers associated with Feature Group A Switched Access Service are subject to Telephone Company local and/or general exchange service tariff charges (including message unit and toll charges as applicable). The monthly bills rendered to customers for their Feature Group A Switched Access Service will include a credit to reflect any message unit charges collected from their end users under the Telephone Company's local and/or general exchange service tariffs. When the customer is provided FGA service where measurement capability does not exist, the credit will apply to access minutes not to exceed the assumed originating access minutes. No credit will apply for any terminating FGA access minutes. The message unit credit for originating access minutes will be based on the generally applicable message unit charges of the Telephone Company.

(x) Filed under authority of Special Permission No. 93-598 of the Federal Communications Commission.

ACCESS SERVICE

6. Switched Access Service (Cont'd)

6.4 Rate Regulations (Cont'd)

6.4.9 Application of Rates for Feature Group A Extension Service

Feature Group A Switched Access Service is available with extensions, i.e., additional terminations of the service at different customer designated premises in the same LATA as the FGA dial tone office or a LATA other than the LATA where the FGA dial tone office is located. Feature Group A extensions within the same LATA and same state as the dial tone office are provided and charged under the Telephone Company's local and/or general exchange service tariffs. Feature Group A extensions located in a LATA other than the LATA where the dial tone office is located or in a different state in the same LATA as the dial tone office are provided and charged as Special Access Service. The rate elements which apply are: A Voice Grade Channel Termination, Channel Mileage, if applicable, and Signaling Capability (optional features and functions), if applicable. All appropriate monthly rates and nonrecurring charges set forth in 17.3.4 following will apply.

In the above example, two CDPs are utilized to better illustrate the concept. From a practical standpoint, both the Switched Access and Special Access Services could be routed via the same CDP.

ACCESS SERVICE

6. Switched Access Service (Cont'd)

6.5 Description and Provision of Feature Group A (FGA)

6.5.1 Description

(A) FGA Access, which is available to all customers, provides line side access to Telephone Company end office switches with an associated seven digit local telephone number for the customer's use in originating communications from and terminating communications to an Interexchange Carrier's Interstate Service or a customer - provided interstate communications capability. The customer must specify the Interexchange Carrier to which the FGA service is connected or, in the alternative, specify the means by which the FGA access communications is transported to another state. Special Access Services utilized for connection with FGA at Telephone Company designated WATS Serving Offices as set forth in Section 7. following may be ordered separately by a customer other than the customer which orders the FGA Switched Access Service for the provision of WATS-type services. Special Access Services are ordered as set forth in 5.2 preceding.

(B) FGA Switching is provided at all end office switches. At the option of the customer, FGA is provided on a single or multiple line group basis and is arranged for originating calling only, terminating calling only, or two-way calling which are specified by the customer's order for service.

(C) FGA provides a line side termination at the first point of switching (dial tone office). The line side termination will be provided with either ground start supervisory signaling or loop start supervisory signaling. The type of signaling is at the option of the customer.

ACCESS SERVICE

6. Switched Access Service (Cont'd)

6.5 Description and Provision of Feature Group A (FGA) (Cont'd)

6.5.1 Description (Cont'd)

(D) The Telephone Company shall select the first point of switching, within the selected LATA, at which the line side termination is to be provided unless the customer requests a different first point of switching and Telephone Company facilities and measurement capabilities, where necessary, are available to accommodate such a request.

(E) A seven digit local telephone number assigned by the Telephone Company is provided for access to FGA switching in the originating direction. The seven digit local telephone number will be associated with the selected end office switch and is of the form NXX-XXXX.

If the customer requests a specific seven digit telephone number that is not currently assigned, and the Telephone Company can, with reasonable effort, comply with that request, the requested number will be assigned to the customer.

(F) FGA switching, when used in the terminating direction, is arranged with dial tone start-dial signaling. When used in the terminating direction FGA switching may, at the option of the customer, be arranged for dial pulse or dual tone multifrequency address signaling, subject to availability of equipment at the first point of switching. When FGA switching is provided in a hunt group or uniform call distribution arrangement, all FGA switching will be arranged for the same type of address signaling.

ACCESS SERVICE

6. Switched Access Service (Cont'd)

6.5 Description and Provision of Feature Group A (FGA) (Cont'd)

6.5.1 Description (Cont'd)

(G) No address signaling is provided by the Telephone Company when FGA switching is used in the originating direction. Address signaling in such cases, if required by the customer, must be provided by the customer's end user using inband tone signaling techniques. Such inband tone address signals will not be regenerated by the Telephone Company and will be subject to the ordinary transmission capabilities of the Local Transport provided.

(H) FGA switching, when used in the terminating direction, may be used to access valid NXXs in the LATA, local operator service (0- and 0+), Directory Assistance (411 where available and 555-1212), emergency reporting service (911 where available), exchange telephone repair (611 where available), time or weather announcement services of the Telephone Company, community information services of an information service provider, and other customers' services (by dialing the appropriate digits).

Charges for FGA terminating calls requiring operator assistance or calls to 611 or 911 will only apply where sufficient call details are available. Additional non-access charges will also be billed on

ACCESS SERVICE

6. Switched Access Service (Cont'd)

6.5 Description and Provision of Feature Group A (FGA) (Cont'd)

6.5.1 Description (Cont'd)

(H) (Cont'd)

a separate account for (1) an operator surcharge, as set forth in the local exchange tariffs, for local operator assistance (0- and 0+) calls, (2) calls to certain community information services, for which rates are applicable under Telephone Company exchange service tariffs, e.g., 976 (DIAL IT) Network Services, and, (3) calls from a FGA line to another customer's service in accordance with that customer's applicable service rates when the Telephone Company performs the billing function for that customer.

(I) When a FGA switching arrangement for an individual customer (a single line or entire hunt group) is discontinued at an end office, an intercept announcement is provided. This arrangement provides, for a limited period of time, an announcement that the service associated with the number dialed has been disconnected.

(J) FGA will be provisioned over an Entrance Facility from the customer's premises to the customer's serving wire center. (N)

FGA service, when used in the originating direction, will be provisioned as Direct Trunked Transport from the first point of switching (i.e., the end office switch where FGA switching dial tone is provided) to the customer's serving wire center.

FGA service, when used in the terminating direction, will be provisioned as Direct Trunked Transport from the customer's serving wire center to the first point of switching and provisioned as Tandem Switched Transport from the first point of switching to the terminating end office. The Tandem Switching charge will not apply. (N)

ACCESS SERVICE

6. Switched Access Service (Cont'd)

6.5 Description and Provision of Feature Group A (FGA) (Cont'd)

6.5.2 Optional Features

Following are the various nonchargeable optional features that are available in lieu of, or in addition to, the standard features provided with Feature Group A. They are provided as Common Switching, Transport Termination or Local Transport options.

(C) Common Switching Options

Descriptions of the common switching optional features are set forth in 6.9 following.

(1) Call Denial on Line or Hunt Group

(2) Service Code Denial on Line or Hunt Group

(3) Hunt Group Arrangement

(4) Uniform Call Distribution Arrangement

(5) Nonhunting Number for Use with Hunt Group or Uniform Call Distribution Arrangement

(6) Band Advance Arrangement for Use with Special Access Service Utilized in the Provision of WATS-Type Services

(7) Hunt Group Arrangement for Use with Special Access Service Utilized in the Provision of WATS-Type Services

(8) Uniform Call Distribution Arrangement for Use with Special Access Service Utilized in the Provision of WATS-Type Services

(9) Nonhunting Number Associated with a Hunt Group Arrangement or Uniform Call Distribution Arrangement for Use with Special Access Service Utilized in the Provision or WATS-Type Services

ACCESS SERVICE

6. Switched Access Service (Cont'd)

6.5 Description and Provision of Feature Group A (FGA) (Cont'd)

6.5.2 Optional Features (Cont'd)

(B) Transport Termination

(1) Two-way operation with dial pulse address signaling and loop start supervisory signaling
(2) Two-way operation with dial pulse address signaling and ground start supervisory signaling
(3) Two-way operation with dial tone multifrequency address signaling and loop start supervisory signaling
(4) Two-way operation with dial tone multifrequency address signaling and ground start supervisory signaling
(5) Terminating operation with dial pulse address signaling and loop start supervisory signaling
(6) Terminating operation with dial pulse address signaling and ground start supervisory signaling
(7) Terminating operation with dual tone multifrequency address signaling and loop start supervisory signaling
(8) Terminating operation with dual tone multifrequency address signaling and ground start supervisory signaling
(9) Originating operation with loop start supervisory signaling
(10) Originating operation with ground start supervisory signaling

(C) Local Transport Options

(1) Supervisory Signaling (as set forth in 15.1.1(E) following)
(2) Customer Specified Entry Switch Receive Level (as set forth in 15.1.1(E) following)

ACCESS SERVICE

6. Switched Access Service (Cont'd)

6.5 Description and Provision of Feature Group A (FGA) (Cont'd)

6.5.3 Optional Features Provided In Local Tariffs

Certain other features which may be available in connection with Feature Group A (e.g., Speed Calling, Remote Call Forwarding, Bill Number Screening, IntraLATA extensions) are provided under the Telephone Company's local and/or general exchange service tariffs.

6.5.4 Measuring Access Minutes

Customer Feature Group A traffic to end offices will be measured (i.e., recorded) or assumed by the Telephone Company at end office switches. Originating and terminating calls will be measured (i.e., recorded) or assumed by the Telephone Company to determine the basis for computing chargeable access minutes. In the event the customer message detail is not available because the Telephone Company lost or damaged tapes or incurred recording system outages, the Telephone Company will estimate the volume of lost customer access minutes of use based on previously known values.

For terminating calls over FGA and for originating calls over FGA (when the off-hook supervisory signal is provided by the customer's equipment before the called party answers), the measured minutes are the chargeable access minutes. For originating calls over FGA (when the off-hook supervisory signal is forwarded by the customer's equipment when the called party answers), chargeable originating access minutes are derived from recorded minutes using the same formula as set forth in 6.7.4 following for Feature Group C.

ACCESS SERVICE

6. Switched Access Service (Cont'd)

6.5 Description and Provision of Feature Group A (FGA) (Cont'd)

6.5.4 Measuring Access Minutes (Cont'd)

For originating calls over FGA, usage measurement begins when the originating FGA first point of switching receives an off-hook supervisory signal forwarded from the customer's point of termination. This off-hook signal may be provided by the customer's equipment before the called party answers, or forwarded by the customer's equipment when the called party answers.

The measurement of originating call usage over FGA ends when the originating FGA first point of switching receives an on-hook supervisory signal from either the originating end user's end office, indicating the originating end user has disconnected, or the customer's point of termination, whichever is recognized first by the first point of switching.

For terminating calls over FGA, usage measurement begins when the terminating FGA first point of switching receives an off-hook supervisory signal from the terminating end user's end office, indicating the terminating end user has answered. The measurement of terminating call usage over FGA ends when the terminating FGA first point of switching receives an on-hook supervisory signal from either the terminating end user's end office, indicating the terminating end user has disconnected, or the customer's point of termination, whichever is recognized first by the first point of switching.

FGA access minutes or fractions thereof, the exact value of the fraction being a function of the switch technology where the measurement is made, are accumulated over the billing period for each line or hunt group, and are then rounded up to the nearest access minute for each line or hunt group.

ACCESS SERVICE

6. Switched Access Service (Cont'd)

6.5 Description and Provision of Feature Group A (FGA) (Cont'd)

6.5.4 Measuring Access Minutes (Cont'd)

Assumed minutes are used for FGA services which originate or terminate in end offices not equipped with measurement capabilities and in such cases are the chargeable access minutes.

Where originating and terminating measurement capability does not exist for Feature Group A provided to the first point of switching, the number of access minutes will be assumed as set forth in 17.2.5 following.

Where measurement capability exists for either originating or terminating usage, but not both, on a line arranged for two way calling, the number of access minutes per line per month will be assumed usage, as set forth in 17.2.5 following, or the measured usage, whichever is greater. If the usage in the measured direction exceeds the assumed access minutes per line per month, no usage will be assigned in the unmeasured direction. If the measured usage is less than the assumed access minutes per line per month, the usage in the unmeasured direction will be the assumed usage, as set forth in 17.2.5 following, for that unmeasured direction except that the total of measured and assumed minutes in such instances will not exceed the total assumed usage designated for two way calling set forth in 17.2.5 following. If the total exceeds the assumed minutes set forth in 17.2.5 following, the assigned minutes shall be reduced so that the total of measured and unmeasured minutes equals the assumed minutes for two way calling set forth in 17.2.5 following.

Additionally, when the line is arranged for one way calling and there is no measurement capability for that direction, assumed originating access minutes, as set forth in 17.2.5(B) following, will be assigned for originating calling only lines and assumed terminating access minutes, as set forth in 17.2.5(C) following, will be assigned for terminating calling only lines.

ACCESS SERVICE

6. Switched Access Service (Cont'd)

6.5 Description and Provision of Feature Group A (FGA) (Cont'd)

6.5.4 Measuring Access Minutes (Cont'd)

The following matrix illustrates the application of assumed access minutes for FGA as set forth in 17.2.5(A), (B) and (C) following.

Service Ordered As	Can Measure Originating	Can't Measure Originating	Can Measure Terminating	Can't Measure Terminating
Originating Only	Actual	1,510	N/A	N/A
Terminating Only	N/A	N/A	Actual	2,685
Both Originating and Terminating (originating measurement greater than 4195)	Actual	N/A	N/A	0
Both Originating and Terminating (originating measurement equal or less than 4195)	Actual	N/A	N/A	0 to 2685*
Both Originating and Terminating (terminating measurement greater than 4195)	N/A	0	Actual	N/A
Both Originating and Terminating (terminating measurement equal or less than 4195)	N/A	0 to 1510*	Actual	N/A

* Sum of actual and assumed cannot exceed 4195. Reduce assumed minutes of use if necessary.

ACCESS SERVICE

6. Switched Access Service (Cont'd)

6.5 Description and Provision of Feature Group A (FGA) (Cont'd)

6.5.4 Measuring Access Minutes (Cont'd)

Notwithstanding the preceding, when Feature Group A is used for the provision of WATS-type service where measurement capability exists at the WATS Serving Office but not at the Feature Group A first point of switching, the measured WATS-type originating and/or terminating minutes of use shall be separately summed and compared to their respective total assumed originating and/or terminating minutes of use. The number of access minutes per line per month will be the assumed or the measured usage, whichever is greater.

6.5.5 Testing Capabilities

FGA is provided, in the terminating direction where equipment is available, with seven digit access to balance (100 type) test line and milliwatt (102 type) test line. In addition to the tests described in 6.2.4 preceding which are included with the installation of service (Acceptance Testing) and as ongoing routine testing, Additional Cooperative Acceptance Testing and Additional Manual Testing are available as set forth in 13.3.1 following.

ACCESS SERVICE

6. Switched Access Service (Cont'd)

6.6 Description and Provision of Feature Group B (FGB)

6.6.1 Description

(A) FGB Access, which is available to all customers, provides trunk side access to Telephone Company end office switches with an associated uniform 950-XXXX access code. FGB trunk side access is provided for the customer's use in originating communications from and terminating communications to an Interexchange Carrier's Interstate Service or a customer provided interstate communications capability. The customer must specify the Interexchange Carrier to which the FGB service is connected or, in the alternative, specify the means by which the FGB access communications is transported to another state. Special Access Services utilized for connection with FGB at Telephone Company designated WATS Serving Offices as set forth in Section 7 following may be ordered separately by a customer other than the customer which orders the FGB Switched Access Service for the provision of WATS or WATS-type services. Special Access Services are ordered as set forth in 5.2 preceding.

(B) FGB, when directly routed to an end office (i.e., provided without the use of an access tandem switch), is provided at appropriately equipped Telephone Company electronic end office switches. When provided via Telephone Company designated electronic access tandem switches, FGB switching is provided at Telephone Company electronic and electromechanical end office switches.

ACCESS SERVICE

6. Switched Access Service (Cont'd)

6.6 Description and Provision of Feature Group B (FGB) (Cont'd)

6.6.1 Description (Cont'd)

(C) FGB is provided as trunk side switching through the use of end office or access tandem switch trunk equipment. The switch trunk equipment is provided with wink start start-pulsing signals and answer and disconnect supervisory signaling.

(D) FGB switching is provided with multifrequency address signaling in both the originating and terminating directions. Except for FGB switching provided with the automatic number identification (ANI) or rotary dial station signaling arrangements as set forth respectively in 6.9.1(F) and 6.9.2(A) following, any other address signaling in the originating direction, if required by the customer, must be provided by the customer's end user using inband tone signaling techniques. Such inband tone address signals will not be regenerated by the Telephone Company and will be subject to the ordinary transmission capabilities of the Local Transport provided.

(E) The access code for FGB switching is a uniform access code. The form of the uniform access code is 950-XXXX. A uniform access code(s) will be assigned to the customer for the customer's domestic communications and another will be assigned to the customer for its international communications, if required. These access codes will be the assigned access numbers of all FGB switched access service provided to the customer by the Telephone Company.

(F) The Telephone Company will establish a trunk group or groups for the customer at end office switches or access tandem switches where FGB switching is ordered. When required by technical limitations, a separate trunk group will be established for each type of FGB switching arrangement provided. Different types of FGB or other switching arrangements may be combined in a single trunk group at the option of the Telephone Company.

ACCESS SERVICE

6. Switched Access Service (Cont'd)

6.6 Description and Provision of Feature Group B (FGB) (Cont'd)

6.6.1 Description (Cont'd)

(G) FGB switching, when used in the terminating direction, may be used to access valid NXXs in the LATA, time or weather announcement services of the Telephone Company, community information services of an information service provider and other customers' services (by dialing the appropriate digits). When directly routed to an end office, only those valid NXX codes served by that end office may be accessed. When routed through an access tandem, only those valid NXX codes served by end offices subtending the access tandem may be accessed.

The customer will also be billed additional non- access charges for calls to certain community information services for which rates are applicable under Telephone Company exchange service tariffs, e.g., 976 (DIAL-IT) Network Service. Additionally, non-access charges will also be billed for calls from a FGB trunk to another customer's service in accordance with that customer's applicable service rates when the Telephone Company performs the billing function for that customer.

Calls in the terminating direction will not be completed to the 950-XXXX access code, local operator assistance (0- and 0+), Directory Assistance (411 and 555-1212), service codes 611 and 911 or 101XXXX access codes. Calls will be completed to Directory Assistance (NPA-555-1212 or 555-1212) when FGB switching is combined with Directory Assistance (DA) switching. FGB may not be switched, in the terminating direction, to Switched Access Service Feature Groups B, C and D. (C)

ACCESS SERVICE

6. Switched Access Service (Cont'd)

6.6 Description and Provision of Feature Group B (FGB) (Cont'd)

6.6.1 Description (Cont'd)

(H) When all FGB switching arrangements are discontinued at an end office and/or in a LATA, an intercept announcement is provided. This arrangement provides, for a limited period of time, an announcement that the service associated with the number dialed has been disconnected.

(I) For FGB switched access service to a Wireless Switching Center (WSC) directly interconnected to a Telephone Company access tandem office, the customer will be billed only the Local Transport premium rate element for the FGB usage. The mileage used to determine the monthly rate for the local transport rate element is as set forth in 6.4.6(H) preceding. (C)

ACCESS SERVICE

6. Switched Access Service (Cont'd)

6.6 Description and Provision of Feature Group B (FGB) (Cont'd)

6.6.2 Optional Features

Following are descriptions of the various nonchargeable optional features that are available in lieu of, or in addition to, the standard features provided with Feature Group B. They are set forth in (A), (B) and (C) following and are provided as Common Switching, Transport Termination and Local Transport options. Additionally, other optional features provided in local tariffs are set forth in (D) following.

(A) Common Switching Options

Descriptions of the common switching optional features are set forth in 6.9 following.

(1) Automatic Number Identification (ANI)

(2) Up to 7 Digit Outpulsing of Access Digits to Customer

(3) Band Advance Arrangement for Use with Special Access Service Utilized in the Provision of WATS or WATS-Type Services

(4) Hunt Group Arrangement for Use with Special Access Service Utilized in the Provision of WATS or WATS-Type Services

(5) Uniform Call Distribution Arrangement for Use with Special Access Service Utilized in the Provision of WATS or WATS-Type Services

(6) Nonhunting Number Associated with Hunt Group Arrangement or Uniform Call Distribution Arrangement for Use with Special Access Service Utilized in the Provision of WATS or WATS-Type Services

ACCESS SERVICE

6. Switched Access Service (Cont'd)

6.6 Description and Provision of Feature Group B (FGB) (Cont'd)

6.6.2 Optional Features (Cont'd)

(B) Transport Terminations Options

(1) Rotary Dial Station Signaling

(C) Local Transport Options

(1) Customer Specification of Local Transport Termination

(2) Optional Supervisory Signaling

(3) Customer Specified Entry Switch Receive Level

Inasmuch as these options concern transmission levels and signaling they are set forth in 15.1.1 following.

(D) Optional Features Provided In Local Tariffs

Another feature, Bill Number Screening, which may be available in connection with FGB, is provided under the Telephone Company's local and/or general exchange service tariffs.

ACCESS SERVICE

6. Switched Access Service (Cont'd)

6.6 Description and Provision of Feature Group B (FGB) (Cont'd)

6.6.3 Design and Traffic Routing

For Feature Group B, the trunk directionality and traffic routing of the Switched Access Service between the customer designated premises and the entry switch are determined by the customer's order for service; except the Telephone Company will designate the first point(s) of switching and routing to be used where equal access is provided through a centralized equal access arrangement. Those Telephone Company offices providing equal access through centralized arrangements are identified in NATIONAL EXCHANGE CARRIER (x)
ASSOCIATION, INC. TARIFF F.C.C. NO. 4. Additionally, the customer may (x)
order the optional feature Customer Specification of Local Transport Termination as set forth in 15.1.1 following.

6.6.4 Measuring Access Minutes

Customer traffic to end offices will be measured (i.e., recorded) or assumed by the Telephone Company at end office switches or access tandem switches. Originating and terminating calls will be measured (i.e., recorded) or assumed by the Telephone Company to determine the basis for computing chargeable access minutes. In the event the customer message detail is not available because the Telephone Company lost or damaged tapes or incurred recording system outages, the Telephone Company will estimate the volume of lost customer access minutes of use based on previously known values.

For both originating and terminating calls over FGB the measured minutes are the chargeable access minutes.

For originating calls over FGB, usage measurement begins when the originating FGB first point of switching receives answer supervision forwarded from the customer's point of termination, indicating the customer's equipment has answered.

(x) Filed under authority of Special Permission No. 93-598 of the Federal Communications Commission.

ACCESS SERVICE

6. Switched Access Service (Cont'd)

6.6 Description and Provision of Feature Group B (FGB) (Cont'd)

6.6.4 Measuring Access Minutes (Cont'd)

The measurement of originating call usage over FGB ends when the originating FGB first point of switching receives disconnect supervision from either the originating end user's end office, indicating the originating end user has disconnected, or the customer's point of termination, whichever is recognized first by the first point of switching.

For terminating calls over FGB, usage measurement begins when the terminating FGB first point of switching receives answer supervision from the terminating end user's end office, indicating the terminating end user has answered.

The measurement of terminating call usage over FGB ends when the terminating FGB first point of switching receives disconnect supervision from either the terminating end user's end office, indicating the terminating end user has disconnected, or the customer's point of termination, whichever is recognized first by the first point of switching.

FGB access minutes or fractions thereof, the exact value of the fraction being a function of the switch technology where the measurement is made, are accumulated over the billing period for each end office, and are then rounded up to the nearest access minute for each end office.

Assumed minutes are used for FGB services which originate or terminate in end offices not equipped with measurement capabilities and in such cases are the chargeable access minutes.

ACCESS SERVICE

6. Switched Access Service (Cont'd)

6.6 Description and Provision of Feature Group B (FGB) (Cont'd)

6.6.4 Measuring Access Minutes (Cont'd)

Where originating and terminating measurement capability does not exist for Feature Group B provided to the first point of switching, the number of access minutes will be assumed, as set forth in 17.2.5(D) following, when the trunk is arranged for two way calling.

Where measurement capability exists for either originating or terminating usage, but not both, on a trunk arranged for two way calling, the number of access minutes per trunk per month will be assumed usage, as set forth in 17.2.5(D) following, or the measured usage, whichever is greater. If the usage in the measured direction exceeds the assumed access minutes per trunk per month, no usage will be assigned in the unmeasured direction. If the measured usage is less than the assumed access minutes per trunk per month, the usage in the unmeasured direction will be the assumed usage, as set forth in 17.2.5 following, for that unmeasured direction except that the total of measured and assumed minutes in such instances will not exceed the total assumed usage designated for two way calling set forth in 17.2.5(D) following. If the total exceeds the assumed minutes set forth in 17.2.5 following, the assigned minutes shall be reduced so that the total of measured and unmeasured minutes equals the assumed minutes for two way calling set forth in 17.2.5(D) following.

Additionally, when the trunk is arranged for one way calling and there is no measurement capability for that direction, assumed originating access minutes, as set forth in 17.2.5(E) following, will be assigned for originating calling only lines and assumed terminating access minutes, as set forth in 17.2.5(F) following, will be assigned for terminating calling only lines.

ACCESS SERVICE

6. Switched Access Service (Cont'd)

6.6 Description and Provision of Feature Group B (FGB) (Cont'd)

6.6.4 Measuring Access Minutes (Cont'd)

The following matrix illustrates the application of assumed access minutes for FGB as set forth in 17.2.5(D), (E) and (F) following.

Service Ordered As	Can Measure Originating	Can't Measure Originating	Can Measure Terminating	Can't Measure Terminating
Originating Only	Actual	3,132	N/A	N/A
Terminating Only	N/A	N/A	Actual	5,568
Both Originating and Terminating (originating measurement greater than 8700)	Actual	N/A	N/A	0
Both Originating and Terminating (originating measurement equal or less than 8700)	Actual	N/A	Actual	0 to 5568*
Both Originating and Terminating (terminating measurement greater than 8700)	N/A	0	Actual	N/A
Both Originating and Terminating (terminating measurement equal or less than 8700)	N/A	0 to 3132*	Actual	N/A

* Sum of actual and assumed cannot exceed 8700. Reduce assumed minutes of use if necessary.

ACCESS SERVICE

6. Switched Access Service (Cont'd)

6.6 Description and Provision of Feature Group B (FGB) (Cont'd)

6.6.4 Measuring Access Minutes (Cont'd)

Notwithstanding the preceding, when Feature Group B is used for the provision of WATS or WATS-type service where measurement capability exists at the WATS Serving Office but not at the Feature Group B first point of switching, the measured WATS or WATS-type originating and/or terminating minutes of use shall be separately summed and compared to their respective total assumed originating and/or terminating minutes of use. The number of minutes per trunk per month will be the assumed or the measured usage, whichever is greater.

When Feature Group B is ordered at an access tandem and end office specific usage measurement is not available, the actual or assumed originating and/or terminating minutes of use as determined by the exchange carrier providing the access tandem will be apportioned among all subtending end offices. For each end office, such apportionment shall be based on the ratio of the total number of subscriber lines in each end office subtending the access tandem to the total number of subscriber lines associated with all end offices subtending the access tandem. For purposes of administering this regulation, subscriber lines are defined as exchange service lines, Centrex lines and Centrex-type lines provided by the telephone companies under local and/or general exchange service tariffs. The resulting ratio for each end office is then applied to the total access area originating and/or terminating minutes of use to determine originating and/or terminating minutes of use to be assigned for billing purposes to each subtending end office in the access area.

The ratio used to calculate the access minutes will be determined by the Telephone Company and provided to the customer upon his request within fifteen (15) days of the receipt of such request. (T)

ACCESS SERVICE

6. Switched Access Service (Cont'd)

6.6 Description and Provision of Feature Group B (FGB) (Cont'd)

6.6.5 Testing Capabilities

FGB is provided, in the terminating direction where equipment is available, with seven digit access to balance (100 type) test line, milliwatt (102 type) test line, nonsynchronous or synchronous test line, automatic transmission measuring (105 type) test line, data transmission (107 type) test line, loop around test line, short circuit test line and open circuit test line. In addition to the tests described in 6.2.4 preceding which are included with the installation of service (Acceptance Testing) and as ongoing routine testing, Additional Cooperative Acceptance Testing, Additional Automatic Testing, and Additional Manual Testing are available as set forth in 13.3.1 following.

ACCESS SERVICE

6. Switched Access Service (Cont'd)

6.7 Description and Provision of Feature Group C (FGC)

6.7.1 Description

(A) FGC Access provides trunk side access to Telephone Company end office switches for the customer's use in originating and terminating communications. Originating and terminating FGC Access is available to providers of MTS and WATS. Originating FGC Access is available to all customers when used to provide the Interim NXX Translation optional feature. Terminating FGC access is available to all customers other than providers of MTS and WATS when such access is used in conjunction with the provision of the Interim NXX Translation optional feature, but only for purposes of testing. Existing FGC Access will be converted to Feature Group D Access when Feature Group D Access becomes available in an end office. Special Access Services utilized for connection with FGC at Telephone Company designated WATS Serving Offices as set forth in Section 7 following may be ordered separately by a customer other than the customer which orders the FGC Switched Access Service (i.e., a provider of MTS and WATS) for the provision of WATS Services. Special Access Services are ordered as set forth in 5.2 preceding.

ACCESS SERVICE

6. Switched Access Service (Cont'd)

6.7 Description and Provision of Feature Group C (FGC) (Cont'd)

6.7.1 Description (Cont'd)

(B) Feature Group C switching is provided at all end office switches unless Feature Group D end office switching is provided in the same office. When FGD switching is available, FGC switching will not be provided. FGC is provided at Telephone Company end office switches on a direct trunk basis or via Telephone Company designated access tandem switches. Feature Group C switching is furnished to providers of MTS and WATS. Additionally, originating Feature Group C switching is available to all customers when used to provide the Interim NXX Translation optional feature. Terminating Feature Group C switching is available to all customers who are not MTS and WATS providers only when such terminating access is for purposes of testing Feature Group C facilities provided in conjunction with the Interim NXX Translation optional feature.

(C) FGC is provided as trunk side switching through the use of end office or access tandem switch trunk equipment. The switch trunk equipment is provided with answer and disconnect supervisory signaling. Wink start start-pulsing signals are provided in all offices where available. In those offices where wink start start-pulsing signals are not available, delay dial start-pulsing signals will be provided, unless immediate dial pulse signaling is provided, in which case no start-pulsing signals are provided.

ACCESS SERVICE

6. Switched Access Service (Cont'd)

6.7 Description and Provision of Feature Group C (FGC) (Cont'd)

6.7.1 Description (Cont'd)

(D) FGC is provided with multifrequency address signaling except in certain electromechanical end office switches where multifrequency signaling is not available. In such switches, the address signaling will be dial pulse or immediate dial pulse signaling, whichever is available. Up to 12 digits of the called party number dialed by the customer's end user using dual tone multifrequency or dial pulse address signals will be provided by Telephone Company equipment to the customer's premises where the Switched Access Service terminates. Such called party number signals will be subject to the ordinary transmission capabilities of the Local Transport provided.

(E) No access code is required for FGC switching. The telephone number dialed by the customer's end user shall be a seven or ten digit number for calls in the North American Numbering Plan (NANP). For international calls outside the NANP, a seven to twelve digit number may be dialed. The form of the numbers dialed by the customer's end user is NXX-XXXX, 0 or 1 + NXX-XXXX, NPA + NXX-XXXX, 0 or 1 + NPA + NXX-XXXX, and, when the end office is equipped for International Direct Distance Dialing (IDDD), 01 + CC + NN or 011 + CC + NN.

ACCESS SERVICE

6. Switched Access Service (Cont'd)

6.7 Description and Provision of Feature Group C (FGC) (Cont'd)

6.7.1 Description (Cont'd)

(F) FGC switching, when used in the terminating direction, may be used to access valid NXXs in the LATA, time or weather announcement services of the Telephone Company, community information services of an information provider, and other customer's services (by dialing the appropriate codes) when the services can be reached using valid NXX codes. When directly routed to an end office, only those valid NXX codes served by that office may be accessed. When routed through an access tandem, only those valid NXX codes served by offices subtending the access tandem may be accessed. Where measurement capabilities exist, the customer will also be billed additional non-access charges for calls to certain community information services, for which rates are applicable under Telephone Company exchange service tariffs, e.g., 976 (DIAL IT) Network Services. Additionally, non-access charges will also be billed for calls from a FGC trunk to another customer's service in accordance with that customer's applicable service rates when the Telephone Company performs the billing function for that customer. Calls in the terminating direction will not be completed to 950-XXXX access codes, local operator assistance (0- and 0+), Directory Assistance (411 and 555-1212), service codes 611 and 911 and 101XXXX access codes. Calls will be completed to Directory Assistance (NPA-555-1212 or 555-1212) when FGC switching is combined with Directory Assistance switching. FGC may not be switched, in the terminating direction, to Switched Access Service Feature Groups B, C or D. (C)

ACCESS SERVICE

6. Switched Access Service (Cont'd)

6.7 Description and Provision of Feature Group C (FGC) (Cont'd)

6.7.1 Description (Cont'd)

(G) The Telephone Company will establish a trunk group or groups for the customer at end office switches or access tandem switches where FGC switching is provided. When required by technical limitations, a separate trunk group will be established for each type of FGC switching arrangement provided. Different types of FGC or other switching arrangements may be combined in a single trunk group at the option of the Telephone Company.

(H) Unless prohibited by technical limitations the providers of MTS and WATS may, at their option, combine Interim NXX Translation traffic in the same trunk group arrangement with their non-Interim NXX Translation traffic. When required by technical considerations, or when provided to a customer other than the provider of MTS and WATS, or at the request of the customer (i.e., provider of MTS and WATS), a separate trunk group will be established for Interim NXX Translation traffic.

(I) Operator Transfer Service may be provided with FGC Switched Access Service at Telephone Company designated Operator Services locations.

The Telephone Company will provide Operator Transfer Service for calls originating from telephone numbers associated with exchange service lines in end offices subtending the Operator Services location. Operator Transfer Service is provided as set forth in 6.9.4 following.

(J) FGC switching is provided with multifrequency address signaling or out of band SS7 signaling where technically feasible. With multifrequency address signaling and SS7 signaling, up to 12 digits of the called party number dialed by the customer's end user using dual tone multifrequency or dial pulse address signals will be provided by Telephone Company equipment to the customer's premises where the Switched Access Service terminates. Such address signals will be subject to the ordinary transmission capabilities of the Local Transport provided.

ACCESS SERVICE

6. Switched Access Service (Cont'd)

6.7 Description and Provision of Feature Group C (FGC) (Cont'd)

6.7.2 Optional Features

Following are descriptions of the various nonchargeable and chargeable optional features that are available in lieu of, or in addition to, the standard features provided with Feature Group C. Nonchargeable optional features are provided as Common Switching, Transport Termination and Local Transport options as set forth in (A) through (C) following. Chargeable optional features are set forth in (D) following.

(A) Common Switching Options

Descriptions of the common switching optional features are set forth in 6.9 following.

(1) Automatic Number Identification (ANI)

(2) Signaling Options

(a) Delay Dial Start-Pulsing Signaling

(b) Immediate Dial Pulse Address Signaling

(c) Dial Pulse Address Signaling

(3) Service Class Routing

(4) Alternate Traffic Routing

(5) Trunk Access Limitation

(6) Band Advance Arrangement Associated with Special Access Service Utilized in the Provision of WATS Service

(7) End Office End User Line Service Screening for Use with Special Access Service Utilized in the Provision of WATS Service

(8) Hunt Group Arrangement for Use with Special Access Service Utilized in the Provision of WATS Service

ACCESS SERVICE

6. Switched Access Service (Cont'd)

6.7 Description and Provision of Feature Group C (FGC) (Cont'd)

6.7.2 Optional Features (Cont'd)

(A) Common Switching Options (Cont'd)

(9) Uniform Call Distribution Arrangement for Use with Special Access Service Utilized in the Provision of WATS Services

(10) Nonhunting Number Associated with a Hunt Group Arrangement or Uniform Call Distribution Arrangement for Use with Special Access Service Utilized in the Provision of WATS Services

(11) Digital Switched 56 Service (N)

(B) Transport Termination Options

(1) Operator Trunk - Coin, Non-Coin, or Combined Coin and Non-Coin

The Operator Trunk option is set forth in 6.9.2(B) following.

(C) Local Transport Options

(1) Supervisory Signaling

The Supervisory Signaling optional feature, due to its technical nature, is set forth in 15.1.1 following.

(2) Signaling System 7 (SS7)

The SS7 optional feature allows the customer to receive signals for out of band call set up and is available with Feature Group C. This option requires the establishment of a signaling connection between the customer's designated premises/SPOI and a Signaling Transfer Point (STP).

SS7 is provided in both the originating and terminating direction on FGC and each signaling connection is provisioned for two way SS7 signaling information.

ACCESS SERVICE

6. Switched Access Service (Cont'd)

6.7 Description and Provision of Feature Group C (FGC) (Cont'd)

6.7.2 Optional Features (Cont'd)

(C) Local Transport Options (Cont'd)

(2) (Cont'd)

The SS7 optional feature is only available where designated in NATIONAL EXCHANGE CARRIER ASSOCIATION, INC. TARIFF F.C.C. NO. 4 to providers of MTS WATS for all traffic and to all other customers for originating calls to 800 numbers. (x) (x)

(3) Multifrequency Address Signaling

(4) Calling Party Number (CPN)

(5) Charge Number Parameter (CNP)

(D) Chargeable Optional Features

(1) Interim NXX Translation

The Interim NXX Translation Optional Feature is set forth in 6.9.3(A) following.

(2) The Operator Transfer Service Optional Feature is provided as set forth in 6.9.4 following.

(3) Common Channel Signaling/Signaling System 7 (CCS/SS7) Network Connection Service (CCSNC)

The CCSNC Optional Feature is provided as set forth in 6.9.5 following.

(x) Filed under authority of Special Permission No. 93-598 of the Federal Communications Commission.

ACCESS SERVICE

6. Switched Access Service (Cont'd)

6.7 Description and Provision of Feature Group C (FGC) (Cont'd)

6.7.3 Design and Traffic Routing

For Feature Group C, the Telephone Company shall design and determine the routing of Switched Access Service. Additionally, for Tandem Switched Transport, the Telephone Company will design and determine the routing from the first point of switching to the end office. The Telephone Company shall also decide if capacity is to be provided by originating only, terminating only, or two-way trunk groups. Finally, the Telephone Company will decide whether trunk side access will be provided through the use of two-wire or four-wire trunk terminating equipment. (C) (C)

Selection of facilities and equipment and traffic routing of the service are based on standard engineering methods, available facilities and equipment, and actual traffic patterns . (C) (C)

ACCESS SERVICE

6. Switched Access Service (Cont'd)

6.7 Description and Provision of Feature Group C (FGC) (Cont'd)

6.7.4 Measuring Access Minutes

Customer traffic to end offices will be measured (i.e., recorded) by the Telephone Company at end office switches or access tandem switches. Originating and terminating calls will be measured or imputed by the Telephone Company to determine the basis for computing chargeable access minutes. In the event the customer message detail is not available because the Telephone Company lost or damaged tapes or incurred recording system outages, the Telephone Company will estimate the volume of lost customer access minutes of use based on previously known values.

For terminating calls over FGC when measurement capability exists, the measured minutes are the chargeable access minutes. For originating calls over FGC, chargeable originating access minutes are derived from recorded minutes in the following manner:

Step 1: Obtain recorded originating minutes and messages from the appropriate recording data.

Step 2: Obtain the total attempts by dividing the originating measured messages by the completion ratio. Completion ratios (CR) are obtained separately for the major call categories such as DDD, operator, 800, 900, directory assistance and international from a sample study which analyzes the ultimate completion status of the total attempts which receive acknowledgement from the customer. That is, Measured Messages divided by Completion Ratio equals Total Attempts.

ACCESS SERVICE

6. Switched Access Service (Cont'd)

6.7 Description and Provision of Feature Group C (FGC) (Cont'd)

6.7.4 Measuring Access Minutes (Cont'd)

Step 3:Obtain the total non-conversation time additive (NCTA) by multiplying the total attempts (obtained in Step 2) by the NCTA per attempt ratio. The NCTA per attempt ratio is obtained from the sample study identified in Step 2 by measuring the non-conversation time associated with both completed and incompleted attempts. The total NCTA is the time on a completed attempt from customer acknowledgement of receipt of call to called party answer (set up and ringing) plus the time on an incompleted attempt from customer acknowledgment of call until the access tandem or end office receives a disconnect signal (ring - no answer, busy or network blockage). That is, Total Attempts times Non-Conversation Time per Attempt Ratio equals Total NCTA.

Step 4:Obtain total chargeable originating access minutes by adding the total NCTA (obtained in Step 3) to the recorded originating measured minutes (obtained in Step 1). That is, Measured Minutes plus NCTA equals Chargeable Originating Access Minutes.

Following is an example which illustrates how the chargeable originating access minutes are derived from the measured originating minutes using this formula.

Where:	Measured Minutes (M. Min.)	= 7,000
	Measured Messages (M. Mes.)	= 1,000
	Completion Ratio (CR)	= .75
	NCTA per Attempt	= .4

(1) Total Attempts = $\frac{1{,}000(\text{M. Mes})}{.75\ (\text{CR})}$ = 1,333.3 (T)

(2) Total NCTA = .4 (NCTA per Attempt) x 1,333.33 = 533.33

(3) Total Chargeable Originating Access Minutes = 7,000 (M. Min) + 533.33 (NCTA) = 7,533.33

FGC access minutes or fractions thereof, the exact value of the fraction being a function of the switch technology where the measurement is made, are accumulated over the billing period for each end office, and are then rounded up to the nearest access minute for each end office.

ACCESS SERVICE

6. Switched Access Service (Cont'd)

6.7 Description and Provision of Feature Group C (FGC) (Cont'd)

6.7.4 Measuring Access Minutes (Cont'd)

Originating Usage

For originating calls over FGC, provided with Multi-Frequency Signaling, usage measurement begins when the originating FGC first point of switching receives answer supervision from the customer's point of termination, indicating the called party has answered.

For originating calls over FGC provided with Signaling System 7 (SS7) Signaling when the FGC end office is not routed through an access tandem for connection to the customer, usage measurement begins when the SS7 Initial Address Message is sent from the Service Switching Point (SSP) to the Signal Transfer Point (STP) . (T)

For originating calls over FGC provided with Signaling System 7 (SS7) Signaling when the FGC end office is routed through a tandem for connection to the customer, usage measurement begins when the FGC end office receives the SS7 Exit Message from the tandem.

The measurement of originating call usage over FGC provided with Multi-Frequency Signaling ends when the originating FGC first point of switching receives disconnect supervision from either the originating end user's end office, indicating the originating end user has disconnected, or the customer's point of termination, whichever is recognized first by the first point of switching.

The measurement of originating call usage over FGC provided with SS7 Signaling ends when the originating FGC end office receives an SS7 Release Message indicating either the originating or terminating end user has disconnected.

Terminating Usage

For terminating calls over FGC the chargeable access minutes are either measured or derived. For terminating calls over FGC where measurement capability does not exist, terminating FGC usage is derived from originating usage, excluding usage from calls to closed end services or Directory Assistance Services.

ACCESS SERVICE

6. Switched Access Service (Cont'd)

6.7 Description and Provision of Feature Group C (FGC) (Cont'd)

6.7.4 Measuring Access Minutes (Cont'd)

Terminating Usage (Cont'd)

For terminating calls over FGC provided with Multi-Frequency Signaling, where measurement capability exists, the measurement of chargeable access minutes begins when the terminating FGC first point of switching receives answer supervision from the terminating end user's end office, indicating the terminating end user has answered. This measurement ends when the terminating FGC first point of switching receives an on-hook supervisory signal from the terminating end user's end office, indicating the terminating end user has disconnected, or the customer's point of termination, whichever is recognized first by the first point of switching.

For terminating calls over FGC with SS7 signaling, usage measurement begins when the terminating recording switch receives answer supervision from the terminating end user. The Telephone Company switch receives answer supervision and sends the indication to the customer in the form of an answer message. The measurement of terminating FGC call usage ends when the entry switch receives or sends a Release Message, whichever occurs first. (T)

ACCESS SERVICE

6. Switched Access Service (Cont'd)

6.7 Description and Provision of Feature Group C (FGC) (Cont'd)

6.7.5 Design Blocking Probability

The Telephone Company will design the facilities used in the provision of Switched Access Service FGC to meet the blocking probability criteria as set forth in (A) and (B) following.

(A) For Feature Group C, the design blocking objective will be no greater than one percent (.01) between the point of termination at the customer's designated premises and the first point of switching when traffic is directly routed without an alternate route. Standard traffic engineering methods will be used by the Telephone Company to determine the number of transmission paths required to achieve this level of blocking.

(B) The Telephone Company will perform routine measurement functions to assure that an adequate number of transmission paths are in service. The Telephone Company will recommend that additional capacity (i.e., busy hour minutes of capacity) be ordered by the customer when additional paths are required to reduce the measured blocking to the designed blocking level. For the capacity ordered, the design blocking objective is assumed to have been met if the routine measurements show that the measured blocking does not exceed the threshold listed in the following tables.

ACCESS SERVICE

6. Switched Access Service (Cont'd)

6.7 Description and Provision of Feature Group C (FGC) (Cont'd)

6.7.5 Design Blocking Probability (Cont'd) (T)

(B) (Cont'd)

(1) For transmission paths carrying only first routed traffic direct between an end office and customer's designated premises without an alternate route, and for paths carrying only overflow traffic, the measured blocking thresholds are as follows:

Number of Transmission Paths Per Trunk Group	Measured Blocking Thresholds in the Time Consistent Busy Hour for the Number of Measurements Taken Between 8:00 a.m. and 11:00 p.m. Per Trunk Group			
	15-20 Measurements	11-14 Measurements	7-10 Measurements	3-6 Measurements
2	7%	8%	9%	14%
3	5%	6%	7%	9%
4	5%	6%	7%	8%
5-6	4%	5%	6%	7%
7 or more	3%	3.5%	4%	6%

(2) For transmission paths carrying first routed traffic between an end office and customer's premises via an access tandem, the measured blocking thresholds are as follows:

Number of Transmission Paths Per Trunk Group	Measured Blocking Thresholds in the Time Consistent Busy Hour for the Number of Measurements Taken Between 8:00 a.m. and 11:00 p.m. Per Trunk Group			
	15-20 Measurements	11-14 Measurements	7-10 Measurements	3-6 Measurements
2	4.5%	5.5%	6.0%	9.5%
3	3.5%	4.0%	4.5%	6.0%
4	3.5%	4.0%	4.5%	5.5%
5-6	2.5%	3.5%	4.0%	4.5%
7 or more	2.0%	2.5%	3.0%	4.0%

ACCESS SERVICE

6. Switched Access Service (Cont'd)

6.7 Description and Provision of Feature Group C (FGC) (Cont'd)

6.7.6 Testing Capabilities

FGC is provided, in the terminating direction where equipment is available, with seven digit access to balance (100 type) test line, milliwatt (102 type) test line, nonsynchronous or synchronous test line, automatic transmission measuring (105 type) test line, data transmission (107 type) test line, loop around test line, short circuit test line and open circuit test line. In addition to the tests described in 6.2.4 preceding which are included with the installation of service (Acceptance Testing) and as ongoing routine testing, Additional Cooperative Acceptance Testing, Additional Automatic Testing and Additional Manual Testing are available as set forth in 13.3.1 following.

ACCESS SERVICE

6. Switched Access Service (Cont'd)

6.8 Description and Provision of Feature Group D (FGD)

6.8.1 Description

(A) FGD Access, which is available to all customers, provides trunk side access to Telephone Company end office switches. Special Access Services utilized for connection with FGD at Telephone Company designated WATS Serving offices as set forth in Section 7 following may be ordered separately by a customer other than the customer which orders the FGD Switched Access Service for the provision of WATS or WATS-type services. Special Access Services are ordered as set forth in 5.2 preceding.

(B) FGD is provided at Telephone Company designated end office switches whether routed directly or via Telephone Company designated electronic access tandem switches. The Telephone Company will designate the first point(s) of switching for FGD services where the Telephone Company elects to provide equal access through a centralized equal access arrangement. Those Telephone Company offices providing equal access through centralized arrangements are identified in NATIONAL EXCHANGE CARRIER ASSOCIATION, INC. TARIFF F.C.C. NO. 4. (x) (x)

(C) FGD is provided as trunk side switching through the use of end office or access tandem switch trunk equipment. The switch trunk equipment is provided with wink start start-pulsing signals and answer and disconnect supervisory signaling.

(D) FGD switching is provided with multifrequency address signaling or out of band SS7 signaling. With multifrequency address signaling and SS7 signaling, up to 12 digits of the called party number dialed by the customer's end user using dual tone multifrequency or dial pulse address signals will be provided by Telephone Company equipment to the customer's premises where the Switched Access Service terminates. Such address signals will be subject to the ordinary transmission capabilities of the Local Transport provided.

(x) Filed under authority of Special Permission No. 93-598 of the Federal Communications Commission.

ACCESS SERVICE

6. Switched Access Service (Cont'd)

6.8 Description and Provision of Feature Group D (FGD) (Cont'd)

6.8.1 Description (Cont'd)

(E) FGD switching, when used in the terminating direction, may be used to access valid NXXs in the LATA, time or weather announcement services of the Telephone Company, community information services of an information service provider, and other customers' services (by dialing the appropriate codes) when such services can be reached using valid NXX codes. When directly routed to an end office, only those valid NXX codes served by that office may be accessed. When routed through an access tandem, only those valid NXX codes served by end offices subtending the access tandem may be accessed. The customer will also be billed additional non-access charges for calls to certain community information services, for which rates are applicable under Telephone Company exchange service tariffs, e.g., 976 (DIAL-IT) Network Service. Additionally, non- access charges will also be billed for calls from a FGD trunk to another customer's service in accordance with that customer's applicable service rates when the Telephone Company performs the billing function for that customer. Calls in the terminating direction will not be completed to 950-XXXX access codes, local operator assistance (0- and 0+), Directory Assistance (411 and 555-1212), service codes 611 and 911 and 101XXXX access codes. (C)
Calls will be completed to Directory Assistance (NPA-555-1212 or 555-1212) when FGD switching is combined with Directory Assistance switching. FGD may not be switched, in the terminating direction, to Switched Access Service Feature Groups B, C or D.

ACCESS SERVICE

6. Switched Access Service (Cont'd)

6.8 Description and Provision of Feature Group D (FGD) (Cont'd)

6.8.1 Description (Cont'd)

(F) The Telephone Company will establish a trunk group or groups for the customer at end office switches or access tandem switches where FGD switching is provided. When required by technical limitations, a separate trunk group will be established for each type of FGD switching arrangement provided. Different types of FGD or other switching arrangements may be combined in a single trunk group at the option of the Telephone Company.

(G) The access code for FGD switching is a uniform access code of the form 101XXXX. A uniform access code(s) will be the assigned number of all FGD access provided to the customer by the Telephone Company. No access code is required for calls to a customer over FGD Switched Access Service if the end user's telephone exchange service is arranged for presubscription to that customer, as set forth in 13.4 following. (C)

Where no access code is required, the number dialed by the customer's end user shall be a seven or ten digit number for calls in the North American Numbering Plan (NANP). For international calls outside the NANP, a seven to twelve digit number may be dialed. The form of the numbers dialed by the customer's end user is NXX-XXXX, 0 or 1 + NXX-XXXX, NPA + NXX-XXXX, 0 or 1 + NPA + NXX-XXXX, and, when the end office is equipped for International Direct Distance Dialing (IDDD), 01 + CC + NN or 011 + CC +NN.

When the 101XXXX access code is used, FGD switching also provides for dialing the digit 0 for access to the customer's operator, 911 for access to the Telephone Company's emergency reporting service, or the end-of-dialing digit (#) for cut-through access to the customer designated premises. (C)

(D)
|
(D)

ACCESS SERVICE

6. Switched Access Service (Cont'd)

6.8 Description and Provision of Feature Group D (FGD) (Cont'd)

6.8.1 Description (Cont'd)

(H) FGD switching will be arranged to accept calls from telephone exchange service locations without the need for dialing the 101XXXX uniform access code. Each telephone exchange service line may be marked with a code to identify which 101XXXX code its calls will be directed to for interLATA service. (C) (C)

(I) Unless prohibited by technical limitations, the customer's Interim NXX Translation traffic may, at the option of the customer, be combined in the same trunk group arrangement with the customer's non- Interim NXX Translation traffic. When required by technical limitations, or at the request of the customer, a separate trunk group will be established for Interim NXX Translation traffic.

(J) When a customer has had FGB access in an end office and subsequently replaces the FGB access with FGD access, at the mutual agreement of the customer and the Telephone Company, the Telephone Company will direct calls dialed by the customer's end users using the customer's previous FGB access code to the customer's FGD access service. The customer must be prepared to handle normally dialed FGD calls, as well as calls dialed with the FGB access code which requires the customer to receive additional address signaling from the end user. Such calls will be rated as FGD. The Telephone Company may, with 90 days' written notice to the customer, discontinue this arrangement.

(K) For FGD switched access service to a Wireless Switching Center (WSC) directly interconnected to a Telephone Company access tandem office, the customer will be billed only the Local Transport premium rate element for the FGD usage. The mileage used to determine the monthly rate for the local transport rate element is as set forth in 6.4.6(H) preceding.

ACCESS SERVICE

6. Switched Access Service (Cont'd)

6.8 Description and Provision of Feature Group D (FGD) (Cont'd)

6.8.1 Description (Cont'd)

(L) Operator Transfer Service (forwarding of 0- calls) may be provided with FGD Switched Access Service at Telephone Company designated Operator Services locations.

The Telephone Company will provide Operator Transfer Service for calls originating from telephone numbers associated with exchange service lines in end offices subtending the Operator Services location. Operator Transfer Service is provided as set forth in 6.9.4 following.

ACCESS SERVICE

6. Switched Access Service (Cont'd)

6.8 Description and Provision of Feature Group D (FGD) (Cont'd)

6.8.2 Optional Features

Following are the various nonchargeable and chargeable optional features that are available in lieu of, or in addition to, the standard features provided with Feature Group D. Nonchargeable Optional Features are provided as Common Switching, Transport Termination and Local Transport options as set forth in (A) through (C) following. Chargeable optional features are set forth in (D) following.

(A) Common Switching Options

Descriptions of the common switching optional features are set forth in 6.9 following.

(1) Automatic Number Identification (ANI)

(2) Service Class Routing

(3) Alternate Traffic Routing

(4) Trunk Access Limitation

(5) Call Gapping Arrangement

(6) International Carrier Option

(7) Band Advance Arrangement for Use with Special Access Service Utilized in the Provision of WATS or WATS-Type Services

(8) End Office End User Line Service Screening for Use with Special Access Service Utilized in the Provision of WATS or WATS-Type Services

(9) Hunt Group Arrangement for Use with Special Access Service Utilized in the Provision ofWATS or WATS-Type Services

(10) Uniform Call Distribution Arrangement for Use with Special Access Service Utilized in the Provision of WATS or WATS-Type Services

(11) Nonhunting Number Associated with Hunt Group Arrangement or Uniform Call Distribution Arrangement for Use with Special Access Service Utilized in the Provision of WATS or WATS-Type Services

(12) Digital Switched 56 Service

ACCESS SERVICE

6. Switched Access Service (Cont'd)

6.8 Description and Provision of Feature Group D (FGD) (Cont'd)

6.8.2 Optional Features (Cont'd)

(B) Transport Termination Options

(1) Operator Trunk - Full Feature

The Operator Trunk optional feature is set forth in 6.9.2(C) following.

(C) Local Transport Options

(1) Supervisory Signaling

The Supervisory Signaling optional feature, due to its technical nature, is set forth in 15.1.1 following.

(2) Signaling System 7 (SS7)

The SS7 optional feature allows the customer to send and receive signals for out of band call set up and is available with Feature Group D. This option requires the establishment of a signaling connection between the customer's designated premises/ Signaling Point of Interface and a Telephone Company's Signaling Transfer Point (STP).

SS7 is provided in both the originating and terminating direction on FGD and each signaling connection is provisioned for two-way SS7 signaling information.

(3) Multifrequency Address Signaling

(4) Calling Party Number (CPN) Parameter

(5) Charge Number Parameter (CNP)

(6) Carrier Selection Parameter (CSP)

(D) Chargeable Optional Features

(1) Interim NXX Translation

The Interim NXX Translation Optional Feature is set forth in 6.9.3(A) following.

(2) Operator Transfer Service

The Operator Transfer Service Optional Feature is provided as set forth in 6.10.3 following.

(3) Common Channel Signaling/Signaling System 7 (CCS/SS7) Network Connection Service (CCSNC)

The CCSNC Optional Feature is provided as set forth in 6.9.5 following.

(D)
|
(D)

ACCESS SERVICE

6. Switched Access Service (Cont'd)

6.8 Description and Provision of Feature Group D (FGD) (Cont'd)

6.8.3 Design and Traffic Routing

For Feature Group D, the Telephone Company shall design and determine the routing of Tandem Switched Access Service, including the selection of the first point of switching and the selection of facilities from the interface to any switching point and to the end offices where busy hour minutes of capacity are ordered. The Telephone Company shall also decide if capacity is to be provided by originating only, terminating only, or two-way trunk groups. Finally, the Telephone Company will decide whether trunk side access will be provided through the use of two-wire or four-wire trunk terminating equipment.

For Feature Group D Direct Trunked Transport service, the Telephone Company will determine the routing of Switched Access Service from the point of interface to the first point of switching or, if the customer specified one or more hub locations for multiplexing, from the point of interface to the hub location, from one hub location to another hub location, and/or from a hub location to the first point of switching. (T)

Selection of facilities and equipment and traffic routing of the service is based on standard engineering methods, available facilities and equipment, and actual traffic patterns. The Telephone Company will designate the first point(s) of switching and routing to be used where equal access is provided through a centralized equal access arrangement. (T) (D) (D)

6.8.4 Measuring Access Minutes

Customer traffic to end offices will be recorded at end office switches or access tandem switches. Originating and terminating calls will be measured or derived to determine the basis for computing chargeable access minutes. In the event the customer message detail is not available because the Telephone Company lost or damaged tapes or incurred recording system outages, the Telephone Company will estimate the volume of lost customer access minutes of use based on previously known values.

FGD access minutes or fractions thereof, the exact value of the fraction being a function of the switch technology where the measurement is made, are accumulated over the billing period for each end office, and are then rounded up to the nearest access minute for each end office.

ACCESS SERVICE

6. Switched Access Service (Cont'd)

6.8 Description and Provision of Feature Group D (FGD) (Cont'd)

6.8.4 Measuring Access Minutes (Cont'd)

Originating Usage

For originating calls over FGD the measured minutes are the chargeable access minutes.

For originating calls over FGD, provided with Multi-Frequency Signaling, usage measurement begins when the originating FGD first point of switching receives the first wink supervisory signal forwarded from the customer's point of termination.

For originating calls over FGD provided with Signaling System 7 (SS7) Signaling when the FGD end office is not routed through an access tandem for connection to the customer, usage measurement begins when the SS7 Initial Address Message is sent from the Service Switching Point (SSP) to the Service Transfer Point (STP).

For originating calls over FGD provided with Signaling System 7 (SS7) Signaling when the FGD end office is routed through a tandem for connection to the customer, usage measurement begins when the FGD end office receives the SS7 Exit Message from the tandem. (T)

The measurement of originating call usage over FGD provided with Multi-Frequency Signaling ends when the originating FGD first point of switching receives disconnect supervision from either the originating end user's end office, indicating the originating end user has disconnected, or the customer's point of termination, whichever is recognized first by the first point of switching.

The measurement of originating call usage over FGD provided with SS7 Signaling ends when the originating FGD end office receives an SS7 Release Message indicating either the originating or terminating end user has disconnected.

ACCESS SERVICE

6. Switched Access Service (Cont'd)

6.8 Description and Provision of Feature Group D (FGD) (Cont'd)

6.8.4 Measuring Access Minutes (Cont'd)

Terminating Usage

For terminating calls over FGD the chargeable access minutes are either measured or derived.

For terminating calls over FGD provided with Multi-Frequency Signaling, where measurement capability exists, the measurement of chargeable access minutes begins when the terminating FGD first point of switching receives answer supervision from the terminating end user's end office, indicating the terminating end user has answered. This measurement ends when the terminating FGD first point of switching receives disconnect supervision from either the terminating end user's end office, indicating the terminating end user has disconnected, or the customer's point of termination, whichever is recognized first by the first point of switching.

For terminating calls over FGD, where measurement capability does not exist, terminating FGD usage is derived from originating usage, excluding usage from calls to closed end services or Directory Assistance Services.

For terminating calls over FGD with SS7 signaling, usage measurement begins when the terminating recording switch receives answer supervision from the terminating end user. The Telephone Company switch receives answer supervision and sends the indication to the customer in the form of an answer message. The measurement of terminating FGD call usage ends when the entry switch receives or sends a release message, whichever occurs first.

ACCESS SERVICE

6. Switched Access Service (Cont'd)

6.8 Description and Provision of Feature Group D (FGD) (Cont'd)

6.8.5 Design Blocking Probability

The Telephone Company will design the facilities used in the provision of Switched Access Service FGD to meet the blocking probability criteria as set forth in (A) and (B) following.

(A) For Feature Group D, the design blocking objective will be no greater than one percent (.01) between the point of termination at the customer's designated premises and the end office switch, whether the traffic is directly routed without an alternate route or routed via an access tandem. Standard traffic engineering methods as set forth in reference document Telecommunications Transmission Engineering - Volume 3 - Networks and Services (Chapters 6-7) will be used by the Telephone Company to determine the number of transmission paths required to achieve this level of blocking. (T) (x) (x)

(B) The Telephone Company will perform routine measurement functions to assure that an adequate number of transmission paths are in service. The Telephone Company will recommend that additional capacity (i.e., busy hour minutes of capacity or trunks) be ordered by the customer when additional paths are required to reduce the measured blocking to the designed blocking level. For the capacity ordered, the design blocking objective is assumed to have been met if the routine measurements show that the measured blocking does not exceed the threshold listed in the following tables.

(x) Filed under authority of Special Permission No. 93-598 of the Federal Communications Commission.

ACCESS SERVICE

6. Switched Access Service (Cont'd)

6.8 Description and Provision of Feature Group D (FGD) (Cont'd)

6.8.5 Design Blocking Probability (Cont'd)

(B) (Cont'd)

(1) For transmission paths carrying only first routed traffic direct between an end office and customer's designated premises without an alternate route, and for paths carrying only overflow traffic, the measured blocking thresholds are as follows:

Number of Transmission Paths Per Trunk Group	Measured Blocking Thresholds in the Time Consistent Busy Hour for the Number of Measurements Taken Between 8:00 a.m. and 11:00 p.m. Per Trunk Group			
	15-20 Measurements	11-14 Measurements	7-10 Measurements	3-6 Measurements
2	7%	8.0%	9%	14.0%
3	5%	6.0%	7%	9.0%
4	5%	6.0%	7%	8.0%
5-6	4%	5.0%	6%	7.0%
7 or more	3%	3.5%	4%	6.0%

(2) For transmission paths carrying first routed traffic between an end office and customer's premises via an access tandem, the measured blocking thresholds are as follows:

Number of Transmission Paths Per Trunk Group	Measured Blocking Thresholds in the Time Consistent Busy Hour for the Number of Measurements Taken Between 8:00 a.m. and 11:00 p.m. Per Trunk Group			
	15-20 Measurements	11-14 Measurements	7-10 Measurements	3-6 Measurements
2	4.5%	5.5%	6.0%	9.5%
3	3.5%	4.0%	4.5%	6.0%
4	3.5%	4.0%	4.5%	5.5%
5-6	2.5%	3.5%	4.0%	4.5%
7 or more	2.0%	2.5%	3.0%	4.0%

ACCESS SERVICE

6. Switched Access Service (Cont'd)

6.8 Description and Provision of Feature Group D (FGD) (Cont'd)

6.8.6 Network Blocking Charge

The customer will be notified by the Telephone Company to increase its capacity (busy hour minutes of capacity or quantities of trunks) when excessive trunk group blocking occurs on groups carrying Feature Group D traffic and the measured access minutes for that hour exceed the capacity purchased. Excessive trunk group blocking occurs when the blocking thresholds stated below are exceeded. They are predicated on time consistent, hourly measurements over a 30 day period excluding Saturdays, Sundays and national holidays. If the order for additional capacity has not been received by the Telephone Company within 15 days of the notification, the Telephone Company will bill the customer, at the rate set forth in 17.2.2 following, for each overflow in excess of the blocking threshold when (1) the average "30 day period" overflow exceeds the threshold level for any particular hour and (2) the "30 day period" measured average originating or two-way usage for the same clock hour exceeds the capacity purchased.

Blocking Thresholds

Trunks in Service	1%	1/2%
1-2	7.0%	4.5%
3-4	5.0%	3.5%
5-6	4.0%	2.5%
7 or greater	3.0%	2.0%

The 1% blocking threshold is for transmission paths carrying traffic direct (without an alternate route) between an end office and a customer's premises. The 1/2% blocking threshold is for transmission paths carrying first routed traffic between an end office and a customer's premises via an access tandem.

ACCESS SERVICE

6. Switched Access Service (Cont'd)

6.8 Description and Provision of Feature Group D (FGD) (Cont'd)

6.8.7 Testing Capabilities

FGD is provided, in the terminating direction where equipment is available, with seven digit access to balance (100 type) test line, milliwatt (102 type) test line, nonsynchronous or synchronous test line, automatic transmission measuring (105 type) test line, data transmission (107 type) test line, loop around test line, short circuit test line and open circuit test line. In addition to the tests described in 6.2.4 preceding, which are included with the installation of service (Acceptance Testing) and as ongoing routine testing, Additional Cooperative Acceptance Testing, Additional Automatic Testing and Additional Manual Testing, are available as set forth in 13.3.1 following.

When SS7 Signaling is ordered, network compatibility and other testing will be performed cooperatively by the Telephone Company and the customer as specified in Technical References TR-TSV 000905. (x)

(x) Filed under authority of Special Permission No. 93-598 of the Federal Communications Commission.

ACCESS SERVICE

6. Switched Access Service (Cont'd)

6.9 Chargeable and Nonchargeable Optional Features

Following are descriptions of the various optional features that are available in lieu of, or in addition to, the standard features provided with the Feature Groups. They are provided as Common Switching, Transport Termination, Interim NXX Translation options or Operator Transfer Service option.

ACCESS SERVICE

6. Switched Access Service (Cont'd)

6.9 Chargeable and Nonchargeable Optional Features (Cont'd)

6.9.1 Common Switching Nonchargeable Optional Features

The following table shows the Feature Groups with which the optional features are available.

	Option	Available Feature Groups A	B	C	D	
A)	Call Denial on Line or Hunt Group	X				
B)	Service Code Denial on Line or Hunt Group	X				
C)	Hunt Group Arrangement	X				
D)	Uniform Call Distribution Arrangement	X				
E)	Nonhunting Number for Use with Hunt Group or Uniform Call Distribution Arrangement	X				
F)	Automatic Number Identification (ANI)		X	X	X	
G)	Up to 7 Digit Outpulsing of Access Digits to Customer	X				
H)	Delay Dial Start-Pulsing Signaling		X			
I)	Immediate Dial Pulse Address Signaling		X			
J)	Dial Pulse Address Signaling		X			
K)	Service Class Routing		X	X		
L)	Alternate Traffic Routing		X	X		
M)	Trunk Access Limitation		X	X		
N)	Call Gapping Arrangement			X		
O)	International Carrier Option			X		
P)	Band Advance Arrangement for Use with Special Access Service Utilized in the Provision of WATS or WATS-Type Services	X	X	X	X	
Q)	End Office End User Line Service Screening for Use with Special Access Service Utilized in the Provision of WATS or WATS-Type Services			X	X	
R)	Hunt Group Arrangement for Use with Special Access Service Utilized in the Provision of WATS or WATS-Type Services	X	X	X	X	
S)	Uniform Call Distribution Arrangement for Use with Special Access Service Utilized in the Provision of WATS or WATS-Type Services	X	X	X	X	
T)	Nonhunting Number Associated with Hunt Group Arrangement or Uniform Call Distribution Arrangement for Use with Special Access Service Utilized in the Provision of WATS or WATS-Type Services	X	X	X	X	
U)	Digital Switched 56 Service			X	X	
V)	Multifrequency Address Signaling			X	X	
W)	Signaling System 7 (SS7) Signaling			X	X	
X)	Calling Party Number (CPN)					
Y)	Carrier Selection Parameter (CSP)				X	
Z)	Charge Number Parameter (CNP)			X	X	
AA)	Flexible Automatic Number Identification (Flex ANI)				X	(N)

ACCESS SERVICE

6. Switched Access Service (Cont'd)

6.9 Chargeable and Nonchargeable Optional Features (Cont'd)

6.9.1 Common Switching Nonchargeable Optional Features (Cont'd)

(A) Call Denial on Line or Hunt Group

This option allows for the screening of terminating Feature Group A calls. There are two screening arrangements available with this option as follows: 1) limiting terminating calls for completion to only 411 or 555-1212 whichever is available, 611, 911, 800 series service and a Telephone Company specified set of NXXs within the Telephone Company local exchange calling area of the dial tone office in which the arrangement is provided or, 2) limiting terminating calls to completion to only the NXXs associated with all end offices in the LATA, i.e., the call cannot be further switched or routed out of the LATA nor will calls be completed to 411 or 555-1212 whichever is available, 611, 911 or 800 series service. All other calls are routed to a reorder tone or recorded announcement. Arrangement 1 is provided in all Telephone Company electronic end offices and, where available, in electromechanical end offices. Arrangement 2 is provided where available. This feature is available with Feature Group A. (C) (x) (C) (x)

(B) Service Code Denial on Line or Hunt Group

This option allows for the screening of terminating calls within the LATA, and for disallowing completion of calls to 0-, 555 and N11 (e.g., 411, 611, and 911). This feature is provided where available in all Telephone Company end offices. It is available with Feature Group A.

(x) Filed under the authority of Special Permission No. 96-212 of the Federal Communications Commission.

ACCESS SERVICE

6. Switched Access Service (Cont'd)

6.9 Chargeable and Nonchargeable Optional Features (Cont'd)

6.9.1 Common Switching Nonchargeable Optional Features (Cont'd)

(C) Hunt Group Arrangement

This option provides the ability to sequentially access one of two or more line side connections in the originating direction, when the access code of the line group is dialed. This feature is provided in all Telephone Company end offices. It is available with Feature Group A. All Feature Group A access services in the same hunt group must provide off-hook supervisory signaling from the same point in time in the call sequence i.e., all off-hook supervisory signals must either be provided by the customer's equipment before the called party answers or all must be forwarded by the customer's equipment when the called party answers.

(D) Uniform Call Distribution Arrangement

This option provides a type of multiline hunting arrangement which provides for an even distribution of calls among the available lines in a hunt group. Where available, this feature is provided in Telephone Company electronic end offices only. It is available with Feature Group A.

(E) Nonhunting Number for Use with Hunt Group or Uniform Call Distribution Arrangement

This option provides access to an individual line within a multiline hunt or uniform call distribution group. When the nonhunting number is dialed, access is provided when it is idle, or busy tone is provided when it is busy. Where available, this feature is provided in Telephone Company electronic end offices only. It is available with Feature Group A.

ACCESS SERVICE

6. Switched Access Service (Cont'd)

6.9 Chargeable and Nonchargeable Optional Features (Cont'd)

6.9.1 Common Switching Nonchargeable Optional Features (Cont'd)

(F) Automatic Number Identification (ANI)

(1) This option provides the automatic transmission of a seven digit or ten digit number and information digits to the customer designated premises for calls originating in the LATA, to identify the calling station. The ANI feature is an end office software function which is associated on a call-by-call basis with:

(a) all individual transmission paths in a trunk group routed directly between an end office and a customer designated premises or, where technically feasible, with

(b) all individual transmission paths in a trunk group between an end office and an access tandem, and a trunk group between an access tandem and a customer designated premises.

(2) The seven digit ANI telephone number is generally available with Feature Groups B and C. With these Feature Groups, technical limitations may exist in Telephone Company switching facilities which require ANI to be provided only on a directly trunked basis. ANI will be transmitted on all calls except those originating from multiparty lines, pay telephones using Feature Group B, or when an ANI failure has occurred. Seven digit ANI is not available with SS7 Signaling. (C)

ACCESS SERVICE

6. Switched Access Service (Cont'd)

6.9 Chargeable and Nonchargeable Optional Features (Cont'd)

6.9.1 Common Switching Nonchargeable Optional Features (Cont'd)

(F) Automatic Number Identification (ANI) (Cont'd)

(3) The ten digit ANI telephone number is only available with Feature Group D. The ten digit ANI telephone number consists of the Number Plan Area (NPA) plus the seven digit ANI telephone number. The ten digit ANI telephone number will be transmitted on all calls except those identified as multiparty line or ANI failure, in which case only the NPA will be transmitted (in addition to the information digit described below). Ten digit ANI is provided with multifrequency address signaling or SS7 signaling.

(4) With Feature Group C, at the option of the customer, ANI may be ordered from end offices where Telephone Company recording for end user billing is not provided. Additionally, ANI is provided from end offices where message detail recording is not required by the Telephone Company; as with 800 series service. ANI is not provided from end offices where the Telephone Company forwards ANI to its recording equipment. (C) (x) (C) (x)

(x) Filed under the authority of Special Permission No. 96-212 of the Federal Communications Commission.

ACCESS SERVICE

6. Switched Access Service (Cont'd)

6.9 Chargeable and Nonchargeable Optional Features (Cont'd)

6.9.1 Common Switching Nonchargeable Optional Features (Cont'd)

(F) Automatic Number Identification (ANI) (Cont'd)

(5) Where complete ANI detail cannot be provided, e.g., on calls from 4 and 8 party services, information digits will be provided to the customer.

The information digits identify:

(a) telephone number is the station billing number - no special treatment required,

(b) multiparty line - telephone number is a 4- or 8- party line and cannot be identified - number must be obtained via an operator or in some other manner,

(c) ANI failure has occurred in the end office switch which prevents identification of calling telephone number - must be obtained by operator or in some other manner,

(d) hotel/motel originated call which requires room number identification,

(e) coinless station, hospital, inmate, etc. call which requires special screening or handling by the customer, and

(f) call is an Automatic Identified Outward Dialed (AIOD) call from customer premises equipment. The AIOD ANI telephone number is the listed telephone number of the customer and is not the telephone number of the calling party.

These ANI information digits are generally available with Feature Groups B, C, and D.

ACCESS SERVICE

6. Switched Access Service (Cont'd)

6.9 Chargeable and Nonchargeable Optional Features (Cont'd)

6.9.1 Common Switching Nonchargeable Optional Features (Cont'd)

(F) Automatic Number Identification (ANI) (Cont'd)

(6) Additional ANI information digits are available with Feature Group D also. They include:

(a) InterLATA restricted - telephone number is identified line

(b) InterLATA restricted - hotel/motel line

(c) InterLATA restricted - coinless, hospital, inmate, etc., line

These information digits will be transmitted as agreed to by the customer and the Telephone Company.

Flexible Automatic Number Identification (Flex ANI) is an enhancement to ANI and is offered as a Common Switching Optional Feature Option of Feature Group D as described in 6.9.1(AA) following. (C) (C)

(7) Restrictions on Use and Sale of ANI

(a) Interstate access customers of this tariff may use ANI in the following manner:

(i) For billing and collection information, for routing, screening, and completing the originating subscriber's call or transaction, or for services directly related to the originating telephone subscriber's call or transaction.

The customer may use ANI to offer a product or service that is directly related to the products or services previously acquired from the customer by the originating subscriber.

ACCESS SERVICE

6. Switched Access Service (Cont'd) (N)

6.9 Chargeable and Nonchargeable Optional Features (Cont'd)

6.9.1 Common Switching Nonchargeable Optional Features (Cont'd)

(F) Automatic Number Identification (ANI) (Cont'd)

(7) Restrictions on Use and Sale of ANI (Cont'd)

(b) Interstate access customers of this tariff may not use ANI in the following manner:

(i) Reusing or selling the telephone number or billing information without first notifying the originating telephone subscriber and obtaining the affirmative consent of such subscriber for such reuse or sale.

(ii) Disclosing (except as permitted in (a), preceding), any information derived from the ANI for any purpose other than 1) performing the services or transactions that are the subject of the originating subscriber's call, 2) ensuring network performance security and the effectiveness of call delivery, 3) compiling, using, and disclosing aggregate information, and 4) complying with applicable law or legal process. (N)

ACCESS SERVICE

6. Switched Access Service (Cont'd)

6.9 Chargeable and Nonchargeable Optional Features (Cont'd)

6.9.1 Common Switching Nonchargeable Optional Features (Cont'd)

(G) Up to 7 Digit Outpulsing of Access Digits to Customer

This option provides for the end office capability of providing up to 7 digits of the uniform access code (950-XXXX) to the customer designated premises.

The customer can request that only some of the digits in the access code be forwarded. The access code digits would be provided to the customer designated premises using multifrequency signaling, and transmission of the digits would precede the forwarding of ANI if that feature were provided. This feature is available with Feature Group B.

(H) Delay Dial Start-Pulsing Signaling

Where available, this option provides a method of indicating to the near end trunk circuit readiness to accept address signaling information by the far end trunk circuit. Delay dial is often referred to as an off-hook, on-hook signaling sequence. The delay dial signal is the off-hook interval and the start-pulsing signal is the on-hook interval. With integrity check, the calling office will not outpulse until a delay dial (off-hook) signal followed by a start-pulsing (on-hook) signal has been identified at the calling office. This option is available with Feature Group C.

ACCESS SERVICE

6. Switched Access Service (Cont'd)

6.9 Chargeable and Nonchargeable Optional Features (Cont'd)

6.9.1 Common Switching Nonchargeable Optional Features (Cont'd)

(I) Immediate Dial Pulse Address Signaling

Where available, this option provides for the forwarding of dial pulses from the Telephone Company end office to the customer without the need of a start-pulsing signal from the customer. It is available with Feature Group C.

(J) Dial Pulse Address Signaling

Where available, this trunk side option provides for the transmission of number information, e.g., called number, between the end office switching system and the customer designated premises (in either direction) by means of direct current pulses. It is available with Feature Group C.

(K) Service Class Routing

This option provides the capability of directing originating traffic from an end office to a trunk group to a customer designated premises, based on the line class of service (e.g., coin, multiparty or hotel/motel), service prefix indicator (e.g., 0-, 0+, 01+ or 011+) or Service Access Code (e.g., 800, 888 or 900). It is provided in suitably equipped end office or access tandem switches. It is available with Feature Groups C and D. (C) (x)

(C) (x)

(x) Filed under the authority of Special Permission No. 96-212 of the Federal Communications Commission.

ACCESS SERVICE

6. Switched Access Service (Cont'd)

6.9 Chargeable and Nonchargeable Optional Features (Cont'd)

6.9.1 Common Switching Nonchargeable Optional Features (Cont'd)

(L) Alternate Traffic Routing

When the customer orders both Direct Trunked Transport and Tandem Switched Transport at the same end office, this option provides the capability of directing originating traffic from an end office (or appropriately equipped access tandem) to a trunk group (the "high usage" group) to a customer designated premises until that group is fully loaded, and then delivering additional originating traffic (the "overflowing" traffic) from the same end office or access tandem to a different trunk group (the "final" group) to a second customer designated premises. The customer shall specify the last trunk CCS desired for the high usage group. It is provided in suitably equipped end office or access tandem switches. It is available with Feature Groups B, C and D. (C) (C) (C)

(M) Trunk Access Limitation

This option provides for the routing of originating 900 service calls to a specified number of transmission paths in a trunk group, in order to limit (choke) the completion of such traffic to the customer. Calls to the designated service which could not be completed over the subset of transmission paths in the trunk group, i.e., the choked calls, would be routed to reorder tone. It is provided in all Telephone Company electronic end offices and where available in electromechanical end offices. It is available with Feature Groups C and D.

ACCESS SERVICE

6. Switched Access Service (Cont'd)

6.9 Chargeable and Nonchargeable Optional Features (Cont'd)

6.9.1 Common Switching Nonchargeable Optional Features (Cont'd)

(N) Call Gapping Arrangement

This option, provided in suitably equipped end office switches, provides for the routing of originating calls to 900 service to be switched in the end office to all transmission paths in a trunk group at a prescribed rate of flow, e.g., one call every five seconds, in order to limit (choke) the completion of such traffic to the customer. Calls to the designated service which are denied access by this feature, i.e., the choked calls, would be routed to a no-circuit announcement. It is provided in selected Feature Group D equipped end offices and is available only with Feature Group D.

(O) International Carrier Option

This option allows for Feature Group D end offices or access tandem switches equipped for International Direct Distance Dialing to be arranged to forward the international calls of one or more international carriers to the customer (i.e., the Telephone Company is able to route originating international calls to a customer other than the one designated by the end user either through presubscription or 101XXXX dialing). (C)
This arrangement requires provision of written verification to the Telephone Company that the customer is authorized to forward such calls. The written verification must be in the form of a letter of agency authorizing the customer to order the option on behalf of the international carrier. This option is only provided at Telephone Company end offices or access tandems equipped for International Direct Distance Dialing and is available only with Feature Group D.

ACCESS SERVICE

6. Switched Access Service (Cont'd)

6.9 Chargeable and Nonchargeable Optional Features (Cont'd)

6.9.1 Common Switching Nonchargeable Optional Features (Cont'd)

(P) Band Advance Arrangement for Use with Special Access Service Utilized in the Provision of WATS or WATS-Type Services

This option, which is provided in association with two or more Special Access Service groups, provides for the automatic overflow of terminating calls to a second Special Access Service group, when the first group has exceeded its call capacity. This option is available with Feature Groups A, B, C and D.

(Q) End Office End User Line Service Screening for Use with Special Access Service Utilized in the Provision of WATS or WATS-Type Services

This option provides the ability to verify that an end user has dialed a called party address (by screening the called NPA and/or NXX on the basis of geographical bands selected by the Telephone Company) which is in accordance with that end user's service agreement with the customer, e.g., WATS. This option is provided in all Telephone Company electronic end offices and, where available, in electromechanical end offices which are designated as WATS Serving Offices. It is available with Feature Groups C and D.

(R) Hunt Group Arrangement for Use with Special Access Service Utilized in the Provision of WATS or WATS-Type Services

This option provides the ability to sequentially access one of two or more Special Access Services utilized in the provision of WATS services (e.g., 800 Series Service Special Access services) in the terminating direction, when the hunting number of the Special Access Service group is forwarded from the customer to the Telephone Company. This feature is provided in all Telephone Company designated WATS Serving Offices. It is available with Feature Groups A, B, C and D. (C) (x)

(x) Filed under the authority of Special Permission No. 96-212 of the Federal Communications Commission.

ACCESS SERVICE

6. Switched Access Service (Cont'd)

6.9 Chargeable and Nonchargeable Optional Features (Cont'd)

6.9.1 Common Switching Nonchargeable Optional Features (Cont'd)

(S) Uniform Call Distribution Arrangement for Use with Special Access Service Utilized in the Provision of WATS or WATS-Type Services

This option provides a type of multiline hunting arrangement which provides for an even distribution of terminating calls among the available Special Access Services utilized in the provision of WATS or WATS-type Services in the hunt group. Where available, this feature is only provided in Telephone Company designated WATS Serving Offices. It is available with Feature Groups A, B, C and D.

(T) Nonhunting Number Associated with Hunt Group Arrangement or Uniform Call Distribution Arrangement for Use with Special Access Service Utilized in the Provision of WATS or WATS-Type Services

This option provides an arrangement, for an individual Special Access Service utilized in the provision of WATS or WATS-type Services within a multiline hunt or uniform call distribution group, that provides access to that Special Access Service within the hunt or uniform call distribution group when it is idle or provides busy tone when it is busy, when the nonhunting number is dialed, without hunting to the next idle number. Where available, this feature is only provided in Telephone Company designated WATS Serving Offices. It is available with Feature Groups A, B, C and D.

(U) Digital Switched 56 Service

This option provides for a connection between a customer's premise and a suitably equipped end user's premise which uses end office switching and facilities capable of transmitting digital data up to 56 Kilobits per second. Digital Switched 56 Service is only available in appropriately provisioned Feature Group C and Feature Group D offices as set forth in (C)
NATIONAL EXCHANGE CARRIER ASSOCIATION, INC. TARIFF (x)
F.C.C. NO. 4. (x)

(x) Filed under authority of Special Permission No. 93-598 of the Federal Communications Commission.

ACCESS SERVICE

6. Switched Access Service (Cont'd)

6.9 Chargeable and Nonchargeable Optional Features (Cont'd)

6.9.1 Common Switching Nonchargeable Optional Features (Cont'd)

(V) Multifrequency Address Signaling

Multifrequency Address Signaling is available as an optional feature with FGC and FGD. This feature provides for the transmission of number information and control signals (e.g., number address signals, automatic number identification) between the end office switch and the customer's premises (in either direction). Multifrequency signaling arrangements make use of pairs of frequencies out of a group of six frequencies. Specific information transmitted is dependent upon feature group and call type (i.e., POTS, coin or operator). This feature is not available in combination with SS7 signaling.

(W) Signaling System 7 (SS7) Signaling

This feature provides common channel out of band transmission of address and supervisory SS7 protocol signaling information between the end office switch or the tandem office switching system and the customer's designated premises. The signaling information is transmitted over facilities provided with the Common Channel Signaling/Signaling System 7 Network Connection Service (CCSNC) as specified in (C)
6.1.3(A)(3) preceding. This feature is available with FGC and FGD and
will be provided in accordance with the SS7 Interconnect specifications (x)
described in Technical Reference TR-TSV-000905. (x)

(X) Calling Party Number (CPN)

This feature provides for the automatic transmission of the ten digit directory number, associated with a calling station, to the customer's premises for calls originating in the LATA. The ten digit telephone number consists of the NPA plus the seven digit telephone number, which may or may not be the same number as the calling station's charge number. The ten digit telephone number will be coded as presented, or restricted via a "privacy indicator" for delivery to the called end user.
This feature is automatically provided with originating FGC and FGD (C)
with SS7 signaling. CPN is available where technically feasible.

(x) Filed under authority of Special Permission No. 93-598 of the Federal Communications Commission.

ACCESS SERVICE

6. Switched Access Service (Cont'd)

6.9 Chargeable and Nonchargeable Optional Features (Cont'd)

6.9.1 Common Switching Nonchargeable Optional Features (Cont'd)

(X) Calling Party Number (CPN) (Cont'd) (N)

(1) Restrictions on Use and Sale of CPN

(a) Interstate access customers of this tariff may use CPN in the following manner:

(i) For billing and collection information, for routing, screening, and completing the originating subscriber's call or transaction, or for services directly related to the originating telephone subscriber's call or transaction.

The customer may use CPN to offer a product or service that is directly related to the products or services previously acquired from the customer by the originating subscriber.

(b) Interstate access customers of this tariff may not use CPN in the following manner:

(i) Reusing or selling the telephone number or billing information without first notifying the originating telephone subscriber and obtaining the affirmative consent of such subscriber for such reuse or sale.

(ii) Disclosing (except as permitted in (a), preceding) any information derived from the CPN for any purpose other than 1) performing the services or transactions that are the subject of the originating subscriber's call, 2) ensuring network performance security and the effectiveness of call delivery, 3) compiling, using, and disclosing aggregate information, and 4) complying with applicable law or legal process. (N)

ACCESS SERVICE

6. Switched Access Service (Cont'd)

6.9 Chargeable and Nonchargeable Optional Features (Cont'd)

6.9.1 Common Switching Nonchargeable Optional Features (Cont'd)

(Y) Carrier Selection Parameter (CSP)

This feature provides for the automatic transmission of a signaling indicator which signifies to the customer whether or not the call being processed originated from a presubscribed line. If the line was presubscribed, the indicator will signify if the end user did or did not dial 101XXXX. This feature is provided with originating FGD with SS7 signaling. (C)

(Z) Charge Number Parameter (CNP)

(1) The CNP Parameter is equivalent to the existing ten digit Automatic Number Identification (ANI) available with FGC where technically feasible and FGD with MF signaling. The CNP Parameter provides for the automatic transmission of the ten digit billing number of the calling station and the originating line information. This feature is provided with originating FGC and FGD with SS7 signaling.

(2) Restrictions on Use and Sale of CNP

(a) Interstate access customers of this tariff may use CNP in the following manner:

(i) For billing and collection information, for routing, screening and completing the originating subscriber's call or transaction, or for services directly related to the originating telephone subscriber's call or transaction.

The customer may use CNP to offer a product or service that is directly related to the products or services previously acquired from the customer by the originating subscriber.

ACCESS SERVICE

6. Switched Access Service (Cont'd)

6.9 Chargeable and Nonchargeable Optional Features (Cont'd)

6.9.1 Common Switching Nonchargeable Optional Features (Cont'd)

(Z) Charge Number Parameter (CNP) (Cont'd)

(2) Restrictions on Use and Sale of CNP (Cont'd) (N)

(b) Interstate access customers of this tariff may not use CNP in the following manner:

(i) Reusing or selling the telephone number or billing information without first notifying the originating telephone subscriber and obtaining the affirmative consent of such subscriber for such reuse or sale.

(ii) Disclosing, except as permitted in (a), preceding, any information derived from the CNP for any purpose other than 1) performing the services or transactions that are the subject of the originating subscriber's call, 2) ensuring network performance security and the effectiveness of call delivery, 3) compiling, using, and disclosing aggregate information, and 4) complying with applicable law or legal process. (N)

ACCESS SERVICE

6. Switched Access Service (Cont'd)

6.9 Chargeable and Nonchargeable Optional Features (Cont'd)

6.9.1 Common Switching Nonchargeable Optional Features (Cont'd)

(Z) Charge Number Parameter (CNP) (Cont'd)

(2) Restrictions on Use and Sale of CNP (Cont'd) (N)

(b) Interstate access customers of this tariff may not use CNP in the following manner:

(i) Reusing or selling the telephone number or billing information without first notifying the originating telephone subscriber and obtaining the affirmative consent of such subscriber for such reuse or sale.

(ii) Disclosing, except as permitted in (a), preceding, any information derived from the CNP for any purpose other than 1) performing the services or transactions that are the subject of the originating subscriber's call, 2) ensuring network performance security and the effectiveness of call delivery, 3) compiling, using, and disclosing aggregate information, and 4) complying with applicable law or legal process. (N)

ACCESS SERVICE

6. Switched Access Service (Cont'd)

6.9 Chargeable and Nonchargeable Optional Features (Cont'd)

6.9.1 Common Switching Nonchargeable Optional Features (Cont'd)

(AA) Flexible Automatic Number Identification (Flex ANI) (N)

Flex ANI is a Common Switching Optional Feature that enhances the existing Automatic Number Identification (ANI) optional feature (described in 6.9.1 (F) preceding) by allowing Feature Group D (FGD) customers to receive additional information digits. Flex ANI provides additional values for these information digits over and above the values currently available with ANI and is used to identify additional call types, e.g., 27 for pay telephones requiring central office coin supervision capability, 29 for prison/inmate pay telephones, and 70 for pay telephones not requiring central office coin supervision. Flex ANI can also be used to provide Originating Line Screening (OLS) service. OLS service is described in 13.10 following.

Flex ANI information digits are two digits in length and are activated through switched software program updates. These codes precede the 10-digit directory number of the calling line and are part of the signaling protocol in equal access end offices. The information digits are outpulsed by the switching system along with the directory number from the originating end office and are sent to the receiving office for billing, routing, or special handling purposes.

Customers who have ANI but do not order Flex ANI, will continue to receive the information digits associated with ANI. Flex ANI digits are assigned by the North American Numbering Plan Administrator. The Telephone Company will make available those information digits that are mutually agreed to by the customer and the Telephone Company.

Flex ANI is available to customers with FGD Switched Access Service equipped with ANI. Flex ANI is available in suitably equipped end offices. (N)

ACCESS SERVICE

6. Switched Access Service (Cont'd)

6.9 Chargeable and Nonchargeable Optional Features (Cont'd)

6.9.2 Transport Termination Nonchargeable Optional Features

(A) Rotary Dial Station Signaling

This option provides for the transmission of called party address signaling from rotary dial stations to the customer designated premises for originating calls. This option is provided in the form of a specific type of Transport Termination. It is available with Feature Group B, only on a directly trunked basis.

(B) Operator Trunk - Coin, Non-Coin, or Combined Coin and Non-Coin

This option may be ordered to provide coin, non- coin, or combined coin and non-coin operation. It is available only with Feature Group C and is provided in electronic end offices and other Telephone Company end offices where equipment is available. It is provided as a trunk type of Transport Termination.

Coin, Non-Coin:

This arrangement provides for initial coin return control, except in the case of non-coin, and routing of 0+, 0-, 1+, 01+ or 011+ prefixed originating coin and non-coin calls requiring operator assistance to the customer designated premises. Because operator assisted coin calling traffic is routed over a trunk group dedicated to operator assisted calls, this arrangement is only provided in association with the Service Class Routing option.

This arrangement is normally ordered by the customer in conjunction with the ANI optional feature, since the preponderance of trunk groups equipped with this arrangement will be terminated in the customer's automated operator services systems, rather than in the customer's manual cord boards.

ACCESS SERVICE

6. Switched Access Service (Cont'd)

6.9 Chargeable and Nonchargeable Optional Features (Cont'd)

6.9.2 Transport Termination Nonchargeable Optional Features

(B) Operator Trunk - Coin, Non-Coin, or Combined Coin and Non-Coin (Cont'd)

Combined Coin and Non-Coin:

When so equipped, the ANI optional feature provides for the forwarding of information digits which identify that the call has originated from a hotel or motel, and whether room number identification is required, or that special screening is required, e.g., for coinless pay telephones, dormitory or inmate stations, or other screening arrangements agreed to between the customer and the Telephone Company. (C)

(C) Operator Trunk - Full Feature

This option provides the initial coin return control function to the customer's operator. It is available with Feature Group D and is provided as a trunk type for Transport Termination. This feature is not available with SS7 signaling.

ACCESS SERVICE

6. Switched Access Service (Cont'd)

6.9 Chargeable and Nonchargeable Optional Features (Cont'd)

6.9.3 Chargeable Optional Features

(A) Interim NXX Translation

This service is an originating offering utilizing trunk side Switched Access Service and provides a customer identification function based on the dialed SAC and NXX code.

For example, when an 1+900+NXX-XXXX call is originated by an end user, the Telephone Company will perform the customer identification function based on the dialed digits to determine the customer location to which the call is to be routed. If the call originates from an end office switch not equipped to provide the customer identification function, the call will be routed to an office at which the function is available. Once customer identification has been established, the call will be routed to that customer. Calls originating from an end office switch at which the customer identification function is performed, but to which the customer has not ordered Interim NXX Translation, will be blocked.

Calls to a 900 number dialed via 1+ from coin telephones, 0- or 101XXXX, Inmate Service, and Hotel/Motel Service will be blocked. (C) Calls to a 900 number dialed via 0+ will normally be blocked. Orders received from customers to unblock 0+ calls to a 900 number will be accommodated where suitably equipped facilities exist. (C)

The manner in which Interim NXX Translation is provided is dependent on the status of the end office from which the service is provided (i.e., equipped with equal access capabilities or not equipped with equal access capabilities). When Interim NXX Translation is provided from an end office not equipped with equal access capabilities, it will be provided in conjunction with FGC Switched Access Service.

The charge for Interim NXX Translation is as set forth in 17.2.1(C) following.

ACCESS SERVICE

6. Switched Access Service (Cont'd)

6.9 Chargeable and Nonchargeable Optional Features (Cont'd)

6.9.3 Chargeable Optional Features (Cont'd) (T)

B. Operator Transfer Service (T)

At the option of the customer, Operator Transfer Service as specified following, is available for use with Feature Group C and Feature Group D Switched Access Service. Operator Transfer Service is ordered as set forth in 5.2 preceding and is provided to the customer via separate FGC or FGD trunks dedicated to Operator Transfer Service traffic.

Operator Transfer Service is an arrangement in which Telephone Company operators transfer 0 minus (0-) calls (calls for which the end user dials 0 with no additional digits) to the customer designated by the end user.

The operator transfer function will be performed in the following manner:

- The operator answers the 0- call.
- Initially, the Operator will suggest that the end user dial the customer on a direct basis. If the end user insists that the Operator transfer the call, the Operator will ask the end user to identify the desired customer and will then transfer the call as directed.
- If the end user has no preference, or the identified customer has not subscribed to Operator Transfer Service, the end user will be asked to select from a list of available customers.

ACCESS SERVICE

6. Switched Access Service (Cont'd)

6.9 Chargeable and Nonchargeable Optional Features (Cont'd)

6.9.3 Chargeable Optional Features (Cont'd) (T)

B. Operator Transfer Service Cont'd) (T)

The list of available Operator Transfer Service customers will be updated monthly. The order in which customers will be read to end users will be initially determined by the sequence in which customers have ordered the Operator Transfer Service. For each subsequent month, following the initial order for Operator Transfer Service, the customer in the first position on the list will be moved to the last position on the list. All other customers on the list will be moved up one position, e.g. 3rd to 2nd, 2nd to first, etc. New Operator Transfer Service customers will initially be placed at the bottom of the list of customers.

0 minus pay telephone coin calls will be transferred to the end user designated customer. In order to accept coin sent- paid calls, the customer must order signalling as specified in TR-TSY-000506 and TR-NPL-000258. (C) (x)

The customer may receive inband, multi-wink, or expanded inband coin control signalling, where available, from end offices served by an Operator Services Access Point. Different signalling types cannot be mixed on a signal trunk group.

All non-recurring and usage sensitive rates and charges normally applicable to Feature Groups C or D apply to Operator Transfer Service. Additionally, a charge as specified in 6.1.3 (C)(2) preceding and 17.2.6 following, is assessed the customer per 0 minus call transferred.

(C) Common Channel Signaling/Signaling System 7 Network Connection Service (CCSNC) (T)

Common Channel Signaling/Signaling System 7 (CCS/SS7) Network Connection Service (CCSNC), which is available with Feature Group C and D, where technically feasible as designated in NATIONAL EXCHANGE CARRIER ASSOCIATION, INC. TARIFF F.C.C. NO. 4, provides a signaling path between a customer's designated Signaling Point of Interface (SPOI) and a Signaling Transfer Point (STP). This service provides customers with the use of a two-way signaling path for accessing information necessary for the completion of their end user's calls. (x) (x)

(x) Filed under authority of Special Permission No. 93-598 of the Federal Communications Commission.

ACCESS SERVICE

6. Switched Access Service (Cont'd)

6.9 Chargeable and Nonchargeable Optional Features (Cont'd) (T)

6.9.3 Chargeable Optional Features (Cont'd) (T)

(C) Common Channel Signaling/Signaling System 7 Network Connection Service (CCSNC) (Cont'd) (T)

CCS/SS7 Network Connection Service is comprised of two rate elements; a Signaling Network Access Link (SNAL) and a Signaling Transfer Point (STP) Port. The SNAL is provided as a dedicated 56 Kbps out-of-band signaling connection between the customer's SPOI and the STP port on the STP.

The CCS/SS7 Network Connection Service is provisioned by a mated pair of STPs as described in Technical Reference TR-TSV 000905 in order to ensure network availability and reliability reliability. The Telephone Company shall not be held liable for service outages if the customer employs technology related to the interconnection of signaling networks that does not adhere to generally accepted industry technical standards.

When CCS/SS7 Network Connection service is provisioned for use with SS7 Signaling, interconnection between signalling networks must occur at an STP.

Rates and charges for the CCS/SS7 Network Connection STP Ports and Signaling Network Access Links are contained in 17.2.2 following.

(D) 800 Series Data Base ACCESS SERVICE (T) (C) (x)

800 Series Data Base Access Service is provided with FGC or FGD switched access service. When a call using a toll free service access code (SAC) (e.g., 1+800 or 888+NXX-XXXX) is originated by an end user, the Telephone Company will utilize the Signalling System 7 (SS7) network to query an 800 series service data base to perform the identification function. The call will then be routed to the identified customer over FGC or FGD switched access. (C) (x) (C) (x) (C) (x) (C) (x)

(x) Filed under the authority of Special Permission No. 96-212 of the Federal Communications Commission.

ACCESS SERVICE

6. Switched Access Service (Cont'd)

6.9 Chargeable and Nonchargeable Optional Features (Cont'd)

6.9.3 Chargeable Optional Features (Cont'd) (T)

(D) 800 Series Data Base Access Service (Cont'd) (T)(C)(x)

The manner in which 800 Series Data Base Access Service is provided is dependent on the availability of SS7 service at the end office from which the service is provided as outlined following: (C) (x)

- When 800 Series Data Base Access Service originates at an end office equipped with Service Switching Point (SSP) capability for querying centralized data bases or at a non-SSP equipped end office that can accommodate direct trunking of originating 800 series service type calls, all such service will be provisioned from that end office. If the end office is not equipped with the 888 SAC SSP capability the customer must order Tandem Switched Transport to receive such traffic until the 888 SAC SSP capability becomes available. See Section 6.4.1(C) for credit applicability. (C) (x) (C) (x) (N) (x) (N) (x)

- When 800 Series Data Base Access Service originates at an end office not equipped with SSP customer identification capability, the 800 series service type call will be delivered to the access tandem on which the end office is homed and which is equipped with the SSP feature to query centralized data bases. (C) (x) (C) (x)

  Query charges as set forth in 17.2.2 following are in addition to those charges applicable for the Feature Group C or Feature Group D Switched Access Service . (T)

(x) Filed under the authority of Special Permission No. 96-212 of the Federal Communications Commission.

ACCESS SERVICE

6. Switched Access Service (Cont'd) (S)

6.10 Data Base Services

6.10.1 Service Provider Number Portability (SPNP) Service

(A) General

SPNP Query Service is a capability that utilizes Advanced Intelligent Network (AIN) technology to query a database to secure network routing instructions before completion of a call. The database contains information about end users which have ported their service from the donor switch. At a minimum, the database contains the Location Routing Number (LRN) which identifies the Local Service Provider's (LSP) switch serving each ported end user. The LRN is used to direct the call to the correct switch for completion to the end user. Where more than one network is involved in completing the call, the network just before the terminating network (i.e., the N-1 Network) is responsible for querying a SPNP database to secure the LRN.

N-1 wireline and wireless telecommunications carriers ("Carriers") will be assessed a SPNP query charge as set forth in 6.10.1(B) following where they deliver calls for termination by the Telephone Company for which a query has not been performed.

(B) SPNP Query Service Application

Terminating calls from N-1 Carriers upon which a query has not been performed to numbers in the Telephone Company's network with NXX codes from which a number is or has been ported that have been designated ($) as number portable will require a query to the SPNP database. The query (C) rate element applies for each query received at the Telephone Company's (C) database for each office that has ported number(s). There are two (S) applications of the SPNP network capability available through the (S) Telephone Company's network.

(S) – Reissued matter effective March 23, 1999
(C) – Filed under authority of Special Permission No. 99-44 of the Federal Communications Commission.

ACCESS SERVICE

6. Switched Access Service (Cont'd) (N)

6.10 Data Base Services (Cont'd)

6.10.1 Service Provider Number Portability (SPNP) Service (Cont'd)

(B) SPNP Query Service Application (Cont'd)

(1) Prearranged LNP Query

N-1 Carriers may arrange in advance to have the Telephone Company query the SPNP database for terminating a call into the N-1 Telephone Company's network. This query is initiated on behalf of the Carrier in the performance of its N-1 responsibility. In this scenario, the Telephone Company's end office or access tandem switch will suspend call processing and launch a query to the SPNP database. When the routing information is returned to the switch, call processing is resumed and the call is routed to the correct switch for completion to the called party. The Carrier will be assessed either an end office or a tandem SPNP Query depending upon where the query is launched.

(2) Default SPNP Query

Carriers who have not arranged in advance to have the Telephone Company query the SPNP database or otherwise do not qualify for the prearranged query rate and terminate calls into the Telephone Company's network without having performed the appropriate database query will be assessed a Default SPNP Query. This query is initiated on behalf of the N-1 Carrier in the performance of its N-1 responsibility, and may require the Telephone Company to assume extraordinary measures to meet the demand of unforecasted default queries. The Carrier will be assessed either an end office or a tandem SPNP Default Query depending upon where the query is launched.

(N)

ACCESS SERVICE

6. Switched Access Service (Cont'd) (N)

6.10 Data Base Services (Cont'd)

6.10.1 Service Provider Number Portability (SPNP) Service (Cont'd)

(C) Service Provider Number Portability (SPNP) Surcharge

The Telephone Company queries the database, as required, on behalf of its end user customers, line side access service customers and resale customers to enable completion of calls to numbers with NXX codes that have been designated as number portable. This service is "automatically" provided as part of the dialing process employed in the Telephone Company's local exchange and access network.

On calls placed to numbers with NXX codes that have been designated as number portable, an originating SPNP capable switch, using advanced intelligent network capabilities will suspend call processing, formulate and launch a query via the common channel signaling network to a database containing information necessary to route calls to number portable NXX codes. When the necessary routing information has been returned from the database to the switch originating the query, call processing is resumed and the call is routed to the correct network switching element for completion to the called party.

The SPNP Surcharge Service rate element applies to and provides the capability necessary for the Telephone Company's end user customers, including its end user customers of lineside access services (e.g., FGA) to: (1) maintain the same telephone number when changing from one Telecommunications Service Provider to another while remaining at the same location, and (2) to complete calls to any telephone number that has been ported.

This capability is automatically provided as part of the local dialing process employed in the Telephone Company's local exchange network.

This charge applies per line capable of originating local exchange calls with the following exceptions:

- PBX trunks will be assessed the equivalent of 9 monthly rates; and
- ISDN PRI will be assessed 5 monthly rates. (N)

ACCESS SERVICE

6. Switched Access Service (Cont'd) (N)

6.10 Data Base Services (Cont'd)

6.10.1 Service Provider Number Portability (SPNP) Service (Cont'd)

(D) Service Provisioning

SPNP Query Service will only be available at specifically designated switches.

SPNP Query Service procedures will be applied uniformly to all users of the Telephone Company's SPNP Query Service except as stated in 6.10.1(D)(3), following. The Telephone Company's SPNP database will receive and respond to all queries, including the Telephone Company's queries.

(1) Manner of Provisioning

SPNP Query Service will be provisioned using the LRN. The LRN associates an NPA-NXX-XXXX number with each central office switch that serves ported lines. This number will be known as the LRN for that switch. The LRN will be used as a network routing number for calls to ported numbers served by that switch. All switching equipment types will utilize LRN functionality using Advanced Intelligent Network capability (AIN).

(2) Limitations

SPNP Query Service is to be used only on a call-by-call basis for routing calls to number portable NXX codes and cannot be used for purposes other than those functions described herein.

Information residing in the Telephone Company's SPNP database is protected from unauthorized access and may not be stored in a carrier's database or elsewhere for any reason. (N)

ACCESS SERVICE

6. Switched Access Service (Cont'd) (S)

6.10 Data Base Services (Cont'd)

6.10.1 Service Provider Number Portability (SPNP) Service (Cont'd)

(D) Service Provisioning (Cont'd)

(3) Network Management

The Telephone Company will administer its network with the objective of the provision of acceptable service levels to all users of SPNP query service.

The Telephone Company maintains the right to block any SPNP Query traffic, in a nondiscriminatory manner, where the processing of the SPNP queries threatens to disrupt operation of is network and impair network reliability. The provision of SPNP Query Service is subject to the provisions of Section 6.10.1(D)(2).

(E) Rate Regulations

The rates and charges associated with SPNP Query Services are "query" based and will be billed on a monthly basis, based on recorded usage. Query charges will be applied by the Telephone Company based upon the recordings of carrier queries to the database. If such recordings are not available, the Telephone Company will develop monthly charges based on an average number of queries per month.

(F) Nonrecurring Charges

Nonrecurring charges are one-time charges that apply for a specific work activity. Nonrecurring charges are applicable for the installation of the service, for rearrangements of the service, or for billing of the service. Nonrecurring charges are applicable to a prearranged query customer at the initial installation of the service or when rearrangements of the service are made at the customer's request. All default query customers are charged an initial nonrecurring charge for the first bill that is rendered. (S) (C) (C)

Specific rates and charges are set forth in 17.2.2. (S)

(S) – Reissued matter effective March 23, 1999
(C) – Filed under authority of Special Permission No. 99-44 of the Federal Communications Commission.

ACCESS SERVICE

7. Special Access Service

7.1 General

Special Access Service provides a transmission path to connect customer designated premises*, directly or through a Telephone Company hub or hubs where bridging or multiplexing functions are performed, or to connect a customer designated premises and a WATS Serving Office, or to connect a customer designated premises to a Public Packet Data Network Service. Special Access Service includes all exchange access not utilizing Telephone Company end office switches. (C) (C) (C)

The connections provided by Special Access Service can be either analog or digital. Analog connections are differentiated by spectrum and bandwidth. Digital connections are differentiated by bit rate.

7.1.1 Channel Types

There are seven types of channels used to provide Special Access Services. Each type has its own characteristics. All are subdivided by one or more of the following:

- Transmission specifications,
- Bandwidth,
- Speed (i.e., bit rate),
- Spectrum

Customers can order a basic channel and select from a list of those available transmission parameters and channel interfaces that they desire in order to meet specific communications requirements.

For purposes of ordering channels, each has been identified as a type of Special Access Service. However, such identification is not intended to limit a customer's use of the channel nor to imply that the channel is limited to a particular use. For example, if a customer's equipment is capable of transmitting voice over a channel that is identified as a Metallic Service in this tariff, there is no restriction against doing so.

* Telephone Company Centrex CO and CO-like switches and packet switches included in Public Packet Switching Network (PPSN) Service are considered to be a customer designated premises for purposes of this tariff.

ACCESS SERVICE

7. Special Access Service (Cont'd)

7.1 General (Cont'd)

7.1.1 Channel Types (Cont'd)

Following is a brief description of each type of channel:

Metallic - a channel for the transmission of low speed varying signals at rates up to 30 baud.

Telegraph Grade - a channel for the transmission of binary signals at rates of 0 to 75 baud or 0 to 150 baud.

Voice Grade - a channel for the transmission of analog signals within an approximate bandwidth of 300 to 3000 Hz.

Program Audio - a channel for the transmission of audio signals. The nominal frequency bandwidths are from 200 to 3500 Hz, from 100 to 5000 Hz, from 50 to 8000 Hz, or from 50 to 15000 Hz.

Video - a channel for the transmission of standard 525 line 60 field monochrome or National Television Systems Committee color video signal and one or two associated 5 or 15 kHz audio signals. The bandwidth is either 30 Hz to 4.5 MHz or 30 Hz to 6.6 MHz.

Digital Data - a channel for the digital transmission of synchronous serial data at rates of 2.4, 4.8, 9.6, 19.2, 56.0 or 64.0 Kbps.

High Capacity - a channel for the transmission of isochronous serial digital data at rates of 1.544, 3.152, 6.312, 44.736 or 274.176 Mbps.

ACCESS SERVICE

7. Special Access Service (Cont'd)

7.1 General (Cont'd)

7.1.1 Channel Types (Cont'd)

Detailed descriptions of each of the channel types are provided in 7.4 through 7.10 following.

The customer also has the option of ordering Voice Grade and High Capacity facilities (i.e., 1.544 Mbps, 3.152 Mbps, 6.312 Mbps, 44.736 Mbps and 274.176 Mbps) to Telephone Company hubs for multiplexing to individual channels of a lower capacity or bandwidth. Descriptions of the types of multiplexing available at the hubs, as well as the number of individual channels which may be derived from each type of facility, are set forth in 7.6 and 7.10 following. Additionally, the customer may specify optional features for the individual channels derived from the facility to further tailor the channel to meet specific communications requirements. Descriptions of the optional features and functions available are set forth in 7.2.1 following. (T)

For example, a customer may order a 3.152 Mbps High Capacity channel from a customer designated premises to a Telephone Company hub for multiplexing to two 1.544 Mbps channels. The 1.544 Mbps channels may be further multiplexed at the same or a different hub to Voice Grade channels or may be extended to other customer designated premises or hubs. Optional features may be added to either the 1.544 Mbps or the Voice Grade channels.

ACCESS SERVICE

7. Special Access Service (Cont'd)

7.1 General (Cont'd)

7.1.2 Service Descriptions

For the purposes of ordering, there are seven categories of Special Access Service. These are:

	Service Designator Codes
Metallic	MT
Telegraph Grade	TG
Voice	VG
Program Audio	AP
Video	TV
Digital Data	DA
High Capacity	HC

Each service consists of a basic channel to which a technical specifications package (customized or predefined), channel interface(s) and, when desired, optional features and functions are added to construct the service desired by the customer. Technical specifications packages are described in Section 15. following, optional features and functions are described in this section. Channel interfaces are described in 15.2 following.

Customized technical specifications packages will be provided where technically feasible. If the Telephone Company determines that the requested parameter specifications are not compatible, the customer will be advised and given the opportunity to change the order.

When a customized channel is ordered the customer will be notified whether Additional Engineering Charges apply. In such cases, the customer will be advised and given the opportunity to change the order.

The channel descriptions provided in 7.4 through 7.10 following, specify the characteristics of the basic channel and indicate whether the channel is provided between customer designated premises, between a customer designated premises and a Telephone Company hub where bridging or multiplexing functions are performed, between hubs, or between a customer designated premises and a WATS Serving Office.

ACCESS SERVICE

7. Special Access Service (Cont'd)

7.1 General (Cont'd)

7.1.2 Service Descriptions (Cont'd)

(A) Information pertaining to the technical specifications packages indicates the transmission parameters that are available with each package. This information is displayed in matrices set forth in 15.2 following.

(B) Channel interfaces at each Point of Termination on a two-point service may be symetrical or asymetrical. On a multipoint service they may also be symetrical or asymetrical, but communications can only be provided between compatible channel interfaces. Only certain channel interfaces are compatible. These are set forth in 15.2 following, in a combination format.

(C) Only certain channel interface combinations are available with the predefined technical specifications packages. These are delineated in the Technical References set forth in (F) following. When a customized channel is requested, all channel interface combinations available with the specified type of service are available with the customized channel.

(D) The optional features and functions available with each type of Special Access Service are described in this section. The optional features and functions information also indicates with which technical specifications packages they are available. Such information is displayed in matrices set forth in 15.2 following with the optional feature or function listed down the left side and the technical specifications package listed across the top.

ACCESS SERVICE

7. Special Access Service (Cont'd)

7.1 General (Cont'd)

7.1.2 Service Descriptions (Cont'd)

(E) The Telephone Company will maintain services installed prior to April 1, 1985, at their existing transmission specifications provided such performance specifications do not exceed the standards listed in this provision. Those services exceeding the standards listed will be maintained at the performance levels specified in this tariff.

(F) All services installed after April 1, 1985 will conform to the transmission specifications standards contained in this tariff or in the following Technical References for each category of service:

Metallic	TR-NPL-000336	(x)
Telegraph Grade	TR-NPL-000336	
Voice Grade	TR-TSY-000335 PUB 41004, Table 4	
Program Audio	TR-NPL-000337 and associated Addendum	
Video	TR-NPL-000338	
Digital Data	TR-NPL-000341 and associated Addendum	
For 2.4, 4.8, 9.6 & 56.0 Kpbs	BellCore Pub 62310	
For 19.2 Kpbs	INC Bulletin CB-INC-100	
For 64.0 Kpbs	AT&T PUB 62310	
High Capacity	TR-INS-000342 TR-NPL-000054 PUB 62411	(x)

7.1.3 Service Configurations

There are two types of service configurations over which Special Access Services are provided: two-point service and multipoint service.

(A) Two-Point Service

A two-point service connects two customer designated premises, either on a directly connected basis or through a hub where multiplexing functions are performed, or a customer designated premises and a wire center equipped for Frame Relay Access Service, or a customer designated premises and a WATS Serving Office (WSO). (C) (C)

Applicable rate elements are:
- Channel Terminations
- Channel Mileage (as applicable)
- Optional Features and Functions (when applicable)

(x) Filed under authority of Special Permission No. 93-598 of the Federal Communications Commission.

ACCESS SERVICE

7. Special Access Service (Cont'd)

7.1 General (Cont'd)

7.1.3 Service Configurations (Cont'd)

(A) Two-Point Service (Cont'd)

A Special Access Surcharge, as set forth in 7.3 following, may be applicable.

The following diagram depicts a two-point Voice Grade service connecting two Customer Designated Premises (CDP). The service is provided with C-Type conditioning.

Applicable rate elements are:

- Channel Terminations (applicable one (1) per CDP)
- Channel Mileage
  . 2 Channel Mileage Terminations plus
  . 1 section, Channel Mileage Facility per mile
- C-Type Conditioning Optional Feature

ACCESS SERVICE

7. Special Access Service (Cont'd)

7.1 General (Cont'd)

7.1.3 Service Configurations (Cont'd)

(A) Two-Point Service (Cont'd)

The following diagram depicts a two-point Voice Grade service connecting a customer designated premises to a WATS serving office.

Applicable rate elements for Special Access are:

- Channel Termination
- Channel Mileage
  . 2 Channel Mileage Terminations plus
  . 1 section, Channel Mileage Facility per mile
- Special Access Surcharge*

* May not apply if exemption certification is provided.

ACCESS SERVICE

7. Special Access Service (Cont'd)

7.1 General (Cont'd)

7.1.3 Service Configurations (Cont'd)

(B) Multipoint Service

Multipoint service connects three or more customer designated premises through one or more Telephone Company hubs. Only certain types of Special Access Service are provided as multipoint service. These are so designated in the descriptions for the appropriate channel.

The channel between hubs (i.e., bridging locations) on a multipoint service is a mid-link. There is no limitation on the number of mid-links available with a multipoint service. However, when more than three mid-links in tandem are provided the quality of the overall service may be degraded.

Multipoint service utilizing a customized technical specifications package, as set forth in 7.1.2 preceding and 15.2 following, will be provided when technically possible. If the Telephone Company determines that the requested characteristics for a multipoint service are not compatible, the customer will be advised and given the opportunity to change the order.

When ordering, the customer will specify the desired bridging hub(s). (x)
NATIONAL EXCHANGE CARRIER ASSOCIATION TARIFF F.C.C. (x)
NO. 4 identifies serving wire centers, hub locations and the type of bridging functions available.

Applicable Rate Elements are:

- Channel Terminations (one per customer designated premises)
- Channel Mileage (as applicable between the serving wire center for each customer designated premises and the hub and between hubs).
- Bridging
- Additional Optional Features and Functions (when applicable).

(x) Filed under authority of Special Permission No. 93-598 of the Federal Communications Commission.

ACCESS SERVICE

7. Special Access Service (Cont'd)

7.1 General (Cont'd)

7.1.3 Service Configurations (Cont'd)

(B) Multipoint Service (Cont'd)

The Special Access Surcharge, as set forth in 7.3 following, may be applicable.

Example: Voice Grade multipoint service connecting four customer designated premises (CDP) via two customer specified bridging hubs.

CT - Channel Termination
CMT - Channel Mileage Termination
CMF - Channel Mileage Facility
o - Bridging Port

Applicable rate elements are:

- Channel Terminations (4 applicable)
- Channel Mileage
  - o 2 Channel Mileage Terminations per Channel Mileage Facility section for a total of 8, plus (T)
  - o 4 sections, Channel Mileage Facility per mile
- Bridging Optional Feature (6 applicable, i.e., each bridge port)

ACCESS SERVICE

7. Special Access Service (Cont'd)

7.1 General (Cont'd)

7.1.4 Alternate Use

Alternate Use occurs when a service is arranged by the Telephone Company so that the customer can select different types of transmission at different times. A customer may use a service in any privately beneficial manner. However, where technical or engineering changes are required to effectuate an alternate use, the Telephone Company will make such special arrangements available on an individual case basis.

The arrangement required to transfer the service from one operation to the other (i.e., the transfer relay and control leads) will be rated and provided on an individual case basis and filed in Section 12. following, Specialized Service or Arrangements. The customer will pay the stated tariff rates for the Access Service rate elements for the service ordered [i.e., Channel Terminations, Channel Mileage (as applicable) and Optional Features and Functions (if any)].

7.1.5 Special Facilities Routing

A customer may request that the facilities used to provide Special Access Service be specially routed. The regulations, rates and charges for Special Facilities Routing (i.e., Avoidance, Diversity and Cable-Only) are set forth in Section 11. following.

7.1.6 Design Layout Report

At the request of the customer, the Telephone Company will provide to the customer the make-up of the facilities and services provided under this tariff as Special Access Service to aid the customer in designing its overall service. This information will be provided in the form of a Design Layout Report. The Design Layout Report will be provided to the customer at no charge, and will be reissued or updated whenever these facilities are materially changed.

ACCESS SERVICE

7. Special Access Service (Cont'd)

7.1 General (Cont'd)

7.1.7 Acceptance Testing

At no additional charge, the Telephone Company will, at the customer's request, cooperatively test the following at the time of installation:

(A) For Voice Grade analog services, the acceptance test will include tests for loss, 3-tone slope, DC continuity, operational signaling, C-notched noise, and C-message noise when these parameters are applicable and specified in the order of service. Additionally, for Voice Grade services, a balance (improved loss) test will be made if the customer has ordered the improved loss optional feature.

(B) For other analog services (i.e., Metallic, Telegraph, Program Audio, and Video) and for digital services (i.e., Digital Data and High Capacity), acceptance tests will include tests applicable to the service as specified by the customer in the order for service.

In addition to the above tests, Additional Cooperative Acceptance Testing for Voice Grade service to test other parameters, as described in 13.3.1(B) following, is available at the customer's request. All test results will be made available to the customer upon request.

7.1.8 Ordering Options and Conditions

Special Access Service is ordered under the Access Order provisions set forth in Section 5 preceding. Also included in that section are other charges which may be associated with ordering Special Access Service (e.g., Service Date Change Charges, Cancellation Charges, etc.).

ACCESS SERVICE

7. Special Access Service (Cont'd)

7.2 Rate Regulations

This section contains the specific regulations governing the rates and charges that apply for Special Access.

7.2.1 Rate Categories

There are three basic rate categories which apply to Special Access Service:
- Channel Terminations (described in 7.2.1(A) following)
- Channel Mileage (described in 7.2.1(B) following)
- Optional Features and Functions (described in 7.2.1(C) following).

(A) Channel Termination

The Channel Termination rate category recovers the costs associated with the communications path between a customer designated premises and the serving wire center of that premises. Included as part of the Channel Termination is a standard channel interface arrangement which defines the technical characteristics associated with the type of facilities to which the access service is to be connected at the Point of Termination (POT) and the type of signaling capability, if any. The signaling capability is provided as an optional feature as set forth in (C) following. One Channel Termination charge applies per customer designated premises at which the channel is terminated. This charge will apply even if the customer designated premises and the serving wire center are collocated in a Telephone Company building.

For a Special Access Digital Data Service 56.0 or 64.0 Kbps Bit Rate or High Capacity Service Connecting a customer designated premises to a Public Packet Data Network Service as described in Section 16, following, there will be a charge for only one Channel Termination. (N) | (N)

For DS3 High Capacity Service, the Channel Termination rates are made up of the DS3 Capacity Interface rate and the DS3 Channel Installed rate. The Capacity Interface rate is dependent upon the capacity ordered (i.e., Capacity Interface of 1, 3, 6 or 12) and is applicable at each customer designated premises. The capacity ordered is the maximum number of DS3 services that can be terminated on a given service at the customer designated premises (e.g., a capacity of 3 can terminate 1, 2, or 3 DS3 services). One DS3 Channel Installed rate applies per customer designated premises at which the channel is terminated for each DS3 channel that is ordered. These charges will apply even if the customer designated premises and the serving wire center are collocated in a telephone company building.

ACCESS SERVICE

7. Special Access Service (Cont'd)

7.2 Rate Regulations (Cont'd)

7.2.1 Rate Categories (Cont'd)

(A) Channel Termination (Cont'd)

For an OC3 or OC12 Synchronous Optical Channel Service connecting a customer designated premises to an Asynchronous Transfer Mode Cell Relay Access Service as described in Section 16.7, following, there will be a charge for only one channel termination. For a 1.544 Mbps or 44.736 Mbps High Capacity Service or for an OC3/OC3c Synchronous Optical Channel Service connecting a customer designated premises to a DSL Access Service Connection Point as described in Section 16, following, there will be a charge for only one Channel Termination. For a Metallic Service connecting to a DSL Access Service Connection Point as described in Section 16, following, there will be a charge for two Channel Terminations for each DSL Access Service Connection function ordered.

(1) Synchronous Optical Channel Service Mileage-Based Channel Termination Alternative

The Telephone Companies listed below charge for Synchronous Optical Channel Service Channel Terminations based on mileage-based rates in lieu of a Fixed Channel Termination rate as normally charged by Telephone Companies for Synchronous Optical Channel Service under this Tariff.

Smart City Telecommunications LLC d/b/a Smart City Telecom

For the Telephone Companies listed above, Channel Termination systems include the transport common equipment and the first half mile of local channel facilities at rates specified in Section 17.3 following. Rates for additional lengths of local channel facilities are as specified in Section 17.3 following. (N)

There are two channel termination rates for each Synchronous Optical Channel Service capacity.

- channel termination with an optical customer termination or an optical central office termination (under which configuration the channel termination fiber trunk between the customer designated premises and the central office are not channelized)

- channel terminations without both an optical customer termination or optical central office termination (under which configuration the channel termination fiber trunk between the customer designated premises and the central office is channelized) (N)

ACCESS SERVICE

7. Special Access Service (Cont'd)

7.2 Rate Regulations (Cont'd)

7.2.1 Rate Categories (Cont'd)

(B) Channel Mileage

The Channel Mileage rate category recovers the costs associated with the end office equipment and the transmission facilities between the serving wire centers associated with two customer designated premises, between a serving wire center associated with a customer designated premises and a Telephone Company hub or between two Telephone Company hubs. Channel Mileage rates are made up of the Channel Mileage Facility rate and the Channel Mileage Termination rate.

(1) Channel Mileage Facility

The Channel Mileage Facility rate recovers the per mile cost for the transmission path which extends between the Telephone Company serving wire centers and/or hub(s) or between the Telephone Company serving wire center and another wire center equipped for Frame Relay Access Service. (C) (C)

(2) Channel Mileage Termination

The Channel Mileage Termination rate recovers the cost for end office equipment associated with terminating the facility (i.e., basic circuit equipment and terminations at serving wire centers and hubs). The Channel Mileage Termination rate will apply at the serving wire center(s) for each customer designated premises and Telephone Company hub where the channel is terminated. If the Channel Mileage is between Telephone Company bridging hubs, the Channel Mileage Termination rate will apply per Telephone Company designated hub. If the Channel Mileage is between the serving wire center for a customer designated premises and a WATS Serving Office, the Channel Mileage Termination rate will apply at both the serving wire center associated with the customer designated premises and the WATS Serving Office. If the Channel Mileage is between the serving wire center for a customer designated premises and another wire center equipped for Frame relay Access Service, the Channel Mileage Termination Rate will apply only at the serving wire center for the customer designated premises. When the Channel Mileage Facility is zero (i.e., collocated serving wire centers), neither the Channel Mileage Facility rate nor the Channel Mileage Termination rate will apply. (C) (C)

ACCESS SERVICE

7. Special Access Service (Cont'd)

7.2 Rate Regulations (Cont'd)

7.2.1 Rate Categories (Cont'd)

(C) Optional Features and Functions

The Optional Features and Functions rate category recovers the costs associated with optional features and functions which may be added to a Special Access Service to improve its quality or utility to meet specific communications requirements. These are not necessarily identifiable with specific equipment, but rather represent the end result in terms of performance characteristics which may be obtained. These characteristics may be obtained by using various combinations of equipment. Although the equipment necessary to perform a specified function may be installed at various locations along the path of the service, they will be charged for as a single rate element.

Examples of Optional Features and Functions that are available include, but are not limited to, the following:

- Signaling Capability
- Hubbing Functions
- Conditioning
- Transfer Arrangements

Descriptions for each of the available Optional Features and Functions are set forth in 7.4 through 7.10 following.

A hub is a Telephone Company designated serving wire center at which bridging or multiplexing functions are performed. The bridging functions performed are to connect three or more customer designated premises in a multipoint arrangement. The multiplexing functions are to channelize analog or digital facilities to individual services requiring a lower capacity or bandwidth.

NATIONAL EXCHANGE CARRIER ASSOCIATION, INC. (x)
TARIFFF.C.C. NO. 4 identifies serving wire centers, hub locations, hub (x)
level (i.e., Hub, Terminus Hub, Intermediate Hub, or Super-Intermediate Hub) and the type of bridging or multiplexing functions available. Additionally, subtending wire centers are identified for Intermedite and Super-Intermediate Hubs.

(x) Filed under authority of Special Permission No. 93-598 of the Federal Communications Commission.

ACCESS SERVICE

7. Special Access Service (Cont'd)

7.2 Rate Regulations (Cont'd)

7.2.2 Types of Rates and Charges

There are three types of rates and charges. These are monthly rates, daily rates and nonrecurring charges. The rates and charges are described as follows:

(A) Monthly Rates

Monthly rates are recurring rates that apply each month or fraction thereof that a Special Access Service is provided. For billing purposes, each month is considered to have 30 days.

(B) Daily Rates

Daily rates are recurring rates that apply to each 24 hour period or fraction thereof that a Program Audio or Video Special Access Service is provided for part-time use. For purposes of applying daily rates, the 24 hour period is not limited to a calendar day.

Part-time Video or Program Audio Service provided within a consecutive 30 day period will be charged the daily rate, not to exceed the monthly rate. For each day or partial day after a consecutive 30 day period of service, a charge equal to 1/30th of the monthly rate shall apply.

ACCESS SERVICE

7. Special Access Service (Cont'd)

7.2 Rate Regulations (Cont'd)

7.2.2 Types of Rates and Charges (Cont'd)

(C) Nonrecurring Charges

Nonrecurring charges are one-time charges that apply for specific work activity (i.e., installation or change to an existing service). The types of nonrecurring charges that apply for Special Access Service are: installation of service, installation of optional features and functions, and service rearrangements. These charges are in addition to the Access Order Charge as specified in 17.4.1 following.

(1) Installation of Service

Nonrecurring charges apply to each service installed. The nonrecurring charges for the installation of service are set for each channel type as a nonrecurring charge for the Channel Termination.

(2) Installation of Optional Features and Functions

When optional features and functions are installed coincident with the initial installation of service, no separate nonrecurring charge is applicable. When optional features and functions are installed or changed subsequent to the installation of service, an Access Order Charge as specified in 17.4.1 following will apply per order.

ACCESS SERVICE

7. Special Access Service (Cont'd)

7.2 Rate Regulations (Cont'd)

7.2.2 Types of Rates and Charges (Cont'd)

(C) Nonrecurring Charges (Cont'd)

(3) Service Rearrangements

Service rearrangements are changes to existing (installed) services which may be administrative only in nature, as set forth following, or that involve actual physical change to the service. Changes to pending orders are set forth in 5.4 preceding.

Changes in the physical location of the point of termination or customer designated premises are moves as set forth in 7.2.3 following.

Changes in the type of Service or Channel Termination which result in a change of the minimum period requirement will be treated as a discontinuance of the service and an installation of a new service.

Changes in ownership or transfer of responsibility from one customer to another will be treated as a discontinuance of the service and an installation of a new service. In the event the change in ownership or transfer of responsibility is as set forth in 2.1.2(A) preceding where there is no change in facilities or arrangements, the change will be treated as an administrative change.

ACCESS SERVICE

7. Special Access Service (Cont'd)

7.2 Rate Regulations (Cont'd)

7.2.2 Types of Rates and Charges (Cont'd)

(C) Nonrecurring Charges (Cont'd)

(3) Service Rearrangements (Cont'd)

Administrative changes will be made without charge(s) to the customer. Administrative changes are as follows:

- Change of customer name;
- Change of customer or customer's end user premises address when the change of address is not a result of physical relocation of equipment;
- Change in billing data (name, address, or contact name or telephone number);
- Change of agency authorization;
- Change of customer circuit identification;
- Change of billing account number;
- Change of customer test line number;
- Change of customer or customer's end user contact name or telephone number; and
- Change of jurisdiction.

All other service rearrangements will be charged as follows:

- If the change involves the addition of other customer designated premises to an existing service, the nonrecurring charge for the channel termination rate element will apply. The charge(s) will apply only for the location(s) that is being added. The charge(s) will be in addition to an Access Order Charge as set forth in 17.4.1 following.

ACCESS SERVICE

7. Special Access Service (Cont'd)

7.2 Rate Regulations (Cont'd)

7.2.2 Types of Rates and Charges (Cont'd)

(C) Nonrecurring Charges (Cont'd)

(3) Service Rearrangements (Cont'd)

- If the change involves the addition of an optional feature or function (with the exception of the addition of Clear Channel Capability to an existing service), or if the change involves changing the type of signaling on a Voice Grade service, and for all other changes the Access Order Charge as set forth in 17.4.1 following will apply.

- When the Clear Channel Capability optional feature is installed on an existing facility, the addition will be treated as a discontinuance and start of service and all associated non-recurring charges will apply.

7.2.3 Moves

A move involves a change in the physical location of one of the following:

- The Point of Termination at the customer's premises; or

- The customer's premises

The charges for the move are dependent on whether the move is to a new location within the same building or to a different building.

(A) Moves Within the Same Building

When the move is to a new location within the same building, the charge for the move will be an amount equal to one half of the nonrecurring (i.e., installation) charge for the service termination affected. There will be no change in the minimum period requirements. This charge is in addition to the Access Order Charge as specified in 17.4.1 following.

ACCESS SERVICE

7. Special Access Service (Cont'd) (T)

7.2 Rate Regulations (Cont'd)

7.2.3 Moves (Cont'd)

(B) Moves To a Different Building

Moves to a different building will be treated as a discontinuance and start of service and all associated nonrecurring charges will apply. New minimum period requirements will be established for the new services. The customer will also remain responsible for satisfying all outstanding minimum period charges for the discontinued service.

7.2.4 Minimum Periods

The minimum service period for all services except part-time Video and Program Audio services and DS3 High Capacity Service is one month and the full monthly rate will apply to the first month. Adjustments for the quantities of services established or discontinued in any billing period beyond the minimum period are as set forth in 2.4.1(F) preceding. The minimum service period for part-time Video and program Audio services is a continuous 24-hour period, not limited to a calendar day. The minimum service period for DS3 High Capacity service is twelve months.

ACCESS SERVICE

7. Special Access Service (Cont'd)

7.2 Rate Regulations (Cont'd)

7.2.5 Mileage Measurement

The mileage to be used to determine the monthly rate for the Channel Mileage Facility is calculated on the airline distance between the locations involved, i.e.,

- the serving wire centers associated with two customer designated premises,
- a serving wire center associated with a customer designated premises and a Telephone Company hub,
- a serving wire center associated with a customer designated premises and a wire center equipped for Frame Relay Access Service,
- a serving wire center associated with a customer designated premises and a DSL Access Service Connection Point or a High Speed Internet (HSI) Access Service Connection Point (N) (N)
- two Telephone Company hubs,
- or between the serving wire center associated with a customer designated premises and a WATS Serving Office.

The serving wire center associated with a customer designated premises is the serving wire center from which this customer designated premises would normally obtain dial tone.

Mileage charges are shown with each channel type. To determine the rate to be billed, first compute the mileage using the V&H coordinates method, as set forth in the NATIONAL EXCHANGE CARRIER ASSOCIATION, INC. TARIFF F.C.C. NO. 4, then multiply the resulting number of miles times the Channel Mileage Facility per mile rate, and add the Channel Mileage Termination rate for each termination. When the calculation results in a fraction of a mile, always round up to the next whole mile before determining the mileage and applying the rates. When more than one Telephone Company is involved in the provision of service, billing will be accomplished as set forth in 2.4.7 preceding.

ACCESS SERVICE

7. Special Access Service (Cont'd)

7.2 Rate Regulations (Cont'd)

7.2.5 Mileage Measurement (Cont'd)

When hubs are involved, mileage is computed and rates applied separately for each section of the Channel Mileage, i.e.,

- customer designated premises serving wire center to hub,
- hub to hub and/or
- hub to customer designated premises serving wire center.

However, when any service is routed through a hub for purposes other than customer specified bridging or multiplexing (e.g., the Telephone Company chooses to so route for test access purposes), rates will be applied only to the distance calculated between the serving wire centers associated with the customer designated premises.

See the service configuration example for multipoint service as set forth in 7.1.3(B) preceding.

7.2.6 Facility Hubs

A customer has the option of ordering Voice Grade service or High Capacity services (i.e., DS1, DS1C, DS2, DS3 or DS4) to a facility hub for channelizing to individual services requiring lower capacity facilities (e.g., Telegraph, Voice, Program Audio, etc.).

Different locations may be designated as hubs for different facility capacities, e.g., multiplexing from digital to digital may occur at one location while multiplexing from digital to analog may occur at a different location. When placing an Access Order the customer will specify the desired hub.

NATIONAL EXCHANGE CARRIER ASSOCIATION, INC. TARIFF F.C.C. NO. 4 identifies serving wire centers, hub locations, hub level (i.e., Hub, Terminus Hub, Intermediate Hub, or Super-Intermediate Hub) and the type of multiplexing functions available. Additionally, subtending wire centers are identified for Intermediate and Super- Intermediate Hubs. (x) (x)

(x) Filed under authority of Special Permission No. 93-598 of the Federal Communications Commission.

ACCESS SERVICE

7. Special Access Service (Cont'd)

7.2 Rate Regulations (Cont'd)

7.2.6 Facility Hubs (Cont'd)

Some of the types of multiplexing available include the following:

- from higher to lower bit rate
- from higher to lower bandwidth
- from high capacity to voice frequency channels.

Point to point services may be provided on channels of these services to a hub. The transmission performance for the point to point service provided between customer designated premises will be that of the lower capacity or bit rate. For example, when a 1.544 Mbps channel is multiplexed to voice frequency channels, the transmission performance of the channelized services will be Voice Grade, not High Capacity.

The Telephone Company will commence billing the monthly rate for the service to the hub on the date specified by the customer on the Access Order. Individual channels utilizing these services may be installed coincident with the installation of the service to the hub or may be ordered and/or installed at a later date, at the option of the customer. The customer will be billed for a Voice Grade or a High Capacity Channel Termination, Channel Mileage (when applicable), and the multiplexer at the time the service is installed. Individual service rates (by service type) will apply for a Channel Termination and additional Channel Mileage (as required) for each channelized service. These will be billed to the customer as each individual service is installed.

Cascading multiplexing occurs when a High Capacity service is de-multiplexed to provide channels with a lesser capacity and one of the lesser capacity channels is further de-multiplexed. For example, a 6.312 Mbps High Capacity service is de-multiplexed to four DS1 channels and then one of the DS1 channels is further de- multiplexed to 24 individual Voice Grade channels.

ACCESS SERVICE

7. Special Access Service (Cont'd)

7.2 Rate Regulations (Cont'd)

7.2.6 Facility Hubs (Cont'd)

When cascading multiplexing is performed, whether in the same or a different hub, a charge for the additional multiplexing unit also applies. When cascading multiplexing is performed at different hubbing locations, Channel Mileage charges also apply between the hubs.

The Telephone Company will designate hubs for Program Audio and Video Services. Full-time or part-time service may be provided between customer designated premises or between a customer designated premises and a hub and billed accordingly at the monthly rates set forth in 17.3.5 and 17.3.6 following for a Channel Termination, Channel Mileage and Optional Features and Functions, as applicable. When the service is ordered to a hub, the customer may order full-time or part-time Video and Program Audio services as needed between that hub and additional customer designated premises. The rate elements required to provide the part-time service (i.e., Channel Termination, Channel Mileage and Optional Features and Functions, as applicable) will be billed at daily rates for the duration of the service requested. (T)

ACCESS SERVICE

7. Special Access Service (Cont'd)

7.2 Rate Regulations (Cont'd)

7.2.7 Mixed Use Analog and Digital High Capacity Services

Mixed use refers to a rate application applicable only when the customer orders (C)
High Capacity Special Access facilities between a customer designated premises (C)
and a Telephone Company hub where the Telephone Company performs
multiplexing/de-multiplexing functions and the same customer then orders the
derived channels as Special and Switched Access Services. If the customer has (N)
Switched Access Service between a customer designated premises and an end
office that is multiplexed at a Telephone Company hub and subsequently orders
the derived channels as Special and Switched Access Service, rates and charges
will apply as if the service were ordered as mixed use. (N)

Except as noted above, the High Capacity facility will be ordered, provided and (C)
rated as Special Access Service (i.e., Channel Termination, Channel Mileage, as
appropriate, and Multiplexing Arrangement). The nonrecurring charge that
applies when the mixed use facility is installed will be the nonrecurring charge
associated with the appropriate Special Access High Capacity Channel
Termination. Rating as Special Access will continue until such time as the
customer chooses to use a portion of the available capacity for Switched Access
Service. Individual service (i.e., Switched or Special Access) nonrecurring
charges will not apply to the individual channels of the mixed use facility.

When Special Access Service is provided utilizing a channel of the mixed use
facility to a hub, High Capacity rates and charges will apply for the facility to the
hub, as set forth preceding, and individual service rates and charges will apply
from the hub to the customer designated premises. The rates and charges that
will apply to the portion from the hub to the customer designated premises will
be dependent on the specific type of Special Access Service that is provided (e.g.,
Voice Grade, Telegraph, etc.). The applicable rates and charges will include a
Channel Termination and Channel Mileage, if applicable. Rates and charges for
optional features and functions associated with the service, if any, will apply for
the appropriate channel type.

ACCESS SERVICE

7. Special Access Service (Cont'd)

7.2 Rate Regulations (Cont'd)

7.2.7 Mixed Use Analog and Digital High Capacity Services (Cont'd)

As each individual channel is activated for Switched Access Service, the High Capacity Special Access Channel Termination, Channel Mileage, and Multiplexing rates will be reduced accordingly (e.g., 1/24th for a DS1 service, 1/672nd for a DS3 service, etc.).Switched Access Service rates and charges, as set forth in 17.2 following, will apply for each channel that is used to provide a Switched Access Service. Additionally, the Switched Access Service Entrance Facility, Direct Trunked Transport, and Multiplexing charges, if applicable, will be reduced by multiplying their respective rates by the ratio of derived Switched Access Service channels to the total number of Voice Grade channels that can be derived. (C) (C) (N) (N)

The customer must place an order for each individual Switched or Special Access Service utilizing the Mixed Use Facilities and specify the channel assignment for each such service.

7.2.8 High Capacity Optional Rate Plans

There are two High Capacity Optional Rate plans: a Term Discount plan and a Capacity Discount plan. (T)

The Term Discount plan applies to Special Access DS1 and DS3 High Capacity Service Channel Termination, Channel Mileage Facility and Channel Mileage Termination monthly rates, as set forth following. The current monthly rates for such services are reduced by a fixed percentage. The amount of the discount percentage differs based on the length of the service commitment period selected by the customer. The Term Discount percentages for High Capacity Service are as set forth in 17.3.8 following.

Discounts for the Term Discount plan are only applied to High Capacity Service provided to a customer within the same state and LATA by the same Telephone Company. (T) (T)

Discounts for the Capacity Discount plan are only applied to Special Access DS3 High Capacity Service Channel Termination monthly rates as set forth in 17.3.8 following.

The Term Discount and Capacity Discount Optional Rate Plans are only available from those Telephone Companies listed in 17.3.10 following.

The minimum service period on a monthly rate basis is one month for DS1 service and twelve months for DS3 service.

ACCESS SERVICE

7. Special Access Service (Cont'd)

7.2 Rate Regulations (Cont'd)

7.2.8 High Capacity Optional Rate Plans (Cont'd)

(A) Term Discounts

DS1 and DS3 High Capacity Special Access Service may be ordered at the customer's option on a monthly rate basis or for Term Discount periods of 36 months (3 years) or 60 months (5 years).

The minimum service period for all Term Discount plans is twelve months. The customer must specify the length of the service commitment period at the time the service is ordered.

For customers that subscribe to the Term Discount plan for 36 or 60 months, the Term Discount percentage as set forth in 17.3.8 following will be frozen from Company initiated decreases, for the entire discount period at the percent in effect at the beginning of the Term Discount period. (T)

If a Term Discount Percentage increase occurs during the term of an existing Term Discount plan, the increased percentage will be applied automatically to the remainder of the current Term Discount period.

At the end of the Term Discount period, the customer may convert to month-to-month service or subscribe to a new Term Discount plan. If the customer does not make a choice by the end of the discount period, the rates will automatically convert to month-to-month service rates. (T)

To be included in a Term Discount plan all eligible High Capacity rate elements must be ordered for the same commitment term (i.e., all 36 months or all 60 months) and with the same service date. When additional capacity is subsequently added, it will be available only on a month-to month basis unless the discount period of the entire service is upgraded. (C)

Eligible DS1 or DS3 High Capacity rate elements are those Channel Terminations, Channel Mileage Facility and Channel Mileage Terminations provided to a customer within the same state and LATA by the same telephone company. As long as the number of DS1s or DS3s included in a Term Discount plan remains constant, customer requests to install and disconnect DS1 or DS3 services, including changes affecting different wire centers and/or customer designated premises, will not change the current Term Discount period or the minimum service period and Discontinuance of Service charges as set forth in (3) following will not apply.

ACCESS SERVICE

7. Special Access Service (Cont'd) (T)

7.2 Rate Regulations (Cont'd)

7.2.8 High Capacity Optional Rate Plans (Cont'd)

(A) Term Discounts (Cont'd)

(1) Upgrades in Term Discounts

Services provided under monthly rates or Term Discount rates may be upgraded to a Term Discount plan at any time without incurring Channel Termination nonrecurring charges or discontinuance charges for existing services. The new Term Discount plan must meet or exceed the service term of the plan being upgraded. For example, a service with a 36 month commitment period may be upgraded to a new 36 month, or 60 month service period. The monthly rates will be those that are in effect at the time the service is upgraded. A new minimum service period applies to all High Capacity Service that is upgraded.

(2) Upgrades in Capacity (DS1 to DS3)

If the customer chooses to upgrade a service under the Term Discount rate plan to a higher capacity (i.e., DS1 to DS3), discontinuance charges will not apply, provided all the following conditions are met:

- the customer's order for the disconnect of the existing DS1 Service and the installation of the new DS3 Service are received at the same time and specifically reference the application of upgrade in capacity;

- the customer's disconnect order for the existing DS1 Service must reference the DS3 Service installation order;

- the new service has a total voice equivalent channel capacity greater than the total voice equivalent channel capacity of the service being discontinued; and

- the new Term Discount period meets or exceeds the Term Discount period being discontinued.

ACCESS SERVICE

7. Special Access Service (Cont'd)

7.2 Rate Regulations (Cont'd)

7.2.8 High Capacity Optional Rate Plans (Cont'd)

(A) Term Discounts (Cont'd)

(2) Upgrades in Capacity (DS1 to DS3) (Cont'd)

A new minimum service period applies to all upgrades. Channel Termination nonrecurring charges for an equivalent channel capacity of the existing services being upgraded to the higher speed service will not be assessed. For example, 30 DS1 Services are being upgraded to DS3 Service. A capacity of 3 is installed at the customer's request. A total of 2 DS3 Channel rate elements will be installed without Channel Termination nonrecurring charges being assessed, as it will require 2 DS3 Channel rate elements to provide the equivalent channel capacity of the existing services. Channel Termination nonrecurring charges will not apply to the upgraded lower speed services placed on the higher speed service if requested at the same time as the upgrade request. Channel Termination nonrecurring charges will apply for capacity that exceeds the existing equivalent channel capacity. (T)

Should the customer choose to upgrade either a portion of, or the entire DS1 Service under the Term Discount plan to a DS3 Service and move the service to a new customer location(s) within the same state and LATA, and when service is provided by the same telephone company, discontinuance charges will not apply. (T) (T)

ACCESS SERVICE

7. Special Access Service (Cont'd)

7.2 Rate Regulations (Cont'd)

7.2.8 High Capacity Optional Rate Plans (Cont'd)

(A) Term Discounts (Cont'd)

(3) Discontinuance of Service

If the customer chooses to disconnect all or a portion of the service prior to the expiration of the Term Discount period, discontinuance charges will apply to the portion of the service being discontinued.

Should the customer choose to discontinue a Term Discount plan prior to the completion of the minimum service period, discontinuance charges will apply. Discontinuance charges equal to one-hundred percent of the total undiscounted monthly rates, less any amounts previously paid, will apply for the minimum service period. Additionally, discontinuance charges of fifteen percent for DS1 service, and fifty percent for DS3 service, of the total undiscounted monthly charges will apply to the remaining portion of the discount service term.

Should the customer choose to discontinue service ordered under a Term Discount plan after the minimum service period but before the completion of the discount period, discontinuance charges will apply. Discontinuance charges of fifteen percent for DS1 Service, and fifty percent for DS3 Service, of the total undiscounted monthly charges will apply to the remaining portion of the discount period. For example, a customer has a DS1 Service which it chooses to discontinue after 33 months into a 60-month service term. The discontinuance charge would be 0.15 times 27 months times the undiscounted monthly rates for that service.

ACCESS SERVICE

7. Special Access Service (Cont'd)

7.2 Rate Regulations (Cont'd)

7.2.8 High Capacity Optional Rate Plans (Cont'd)

(B) DS3 Capacity Discounts

DS3 High Capacity Service may also be ordered at discounted rates in capacities of 3, 6 and 12 systems under a Capacity Discount Plan. Capacity Discounts apply only to DS3 Channel Terminations (i.e., DS3 Capacity Interfaces and DS3 Channels Installed). DS3 Capacity Discounts may be ordered as part of, or separate from Term Discount plans. When ordered in conjunction with Term Discount plans the DS3 Channel Terminations must all be ordered under the same month-to-month rate or Term Discount plan with the same service period and service date.

For DS3 High Capacity Channel Terminations the Capacity Interface must be ordered before or in conjunction with an associated DS3 Channel Installed. In addition, the Capacity Interface cannot be disconnected until all of the DS3 Channels Installed are disconnected. (T)

High Capacity Channel Mileage Facility and Channel Mileage Termination charges will apply as required Per DS3 Channel Installed. Capacity Discounts will not apply to these rate elements.

Capacity Discounts will only apply on DS3 Channel Terminations ordered between a serving wire center and customer location, over the same route. Channel Terminations associated with facilities provided between the same serving wire center and customer location via a second or alternate route will not be included as part of the same Capacity Discount plan as the primary route.

The minimum service period for all Capacity Discount plans is twelve (12) months. (T) (T)

ACCESS SERVICE

7. Special Access Service (Cont'd)

7.2 Rate Regulations (Cont'd)

7.2.8 High Capacity Optional Rate Plans (Cont'd)

(B) DS3 Capacity Discounts (Cont'd)

(1) Upgrades in DS3 Capacity Discounts

Services rated under the DS3 monthly rate plan may be upgraded to a Capacity Discount Plan at any time, without incurring Channel Termination nonrecurring or discontinuance charges for existing services.

Customers with a capacity of 1, 3 or 6 DS3 High Capacity Special Access Systems may upgrade to a new Capacity Discount without incurring Channel Termination nonrecurring or discontinuance charges for existing capacity. This upgrade will be allowed provided the customer designated premises remain the same. Additionally, the new Channel Termination capacity must exceed the Channel Termination capacity of the plan being upgraded. For example, a customer orders a Capacity of 3 DS3 Interface with 2 DS3 Channels Installed. Subsequently, the customer requests an upgrade to a Capacity of 12 DS3 Interface and adds an additional 3 DS3 Channels installed. The monthly rates will be those that are in effect at the time the service is upgraded. A new minimum service period applies to all services that are upgraded. Full Channel Termination nonrecurring charges as set forth in Section 17.3.8 will apply only to the 3 additional DS3 Channels added at the time of the discount plan upgrade.

ACCESS SERVICE

7. Special Access Service (Cont'd)

7.2 Rate Regulations (Cont'd)

7.2.8 High Capacity Optional Rate Plans (Cont'd)

(B) DS3 Capacity Discounts (Cont'd)

(1) Upgrades in DS3 Capacity Discounts (Cont'd) (T)

Customers that subscribe to DS3 Capacity Discount plan may upgrade to a larger Capacity Interface. Discontinuance charges will not apply if all the following conditions are met:

- the customer's order for the disconnect of the current DS3 Capacity Interface and order for the installation of the upgraded DS3 Capacity Interface are received by the telephone company at the same time and specifies that the capacity of service is to be upgraded,

- the customer's disconnect order for the existing DS3 Service must reference the new connection order,

- the new service is provided between the same customer locations as the discontinued service,

- the new service has a DS3 Capacity Interface larger than the Capacity Interface of the discount plan or plans being discontinued and,

- any applicable DS3 High Capacity Term Discount plan time period is reestablished or upgraded at the time of the upgrade in the Capacity Discount plan.

ACCESS SERVICE

7. Special Access Service (Cont'd)

7.2 Rate Regulations (Cont'd)

7.2.9 Other Optional Rate Plans

(A) Synchronous Optical Channel Service Optional Rate Plan A (T)

The following Telephone Companies offer Synchronous Optical Channel Service under the Synchronous Optical Channel Service Term Discount Optional Rate Plan A: (N)

Fort Mill Telephone Company
Lancaster Telephone Company
Rock Hill Telephone Company (N)

The Synchronous Optical Channel Service Optional Rate Plan A offers a Term Discount. The Term Discount applies to Channel Terminations, Channel Mileage and Optional Features and Functions monthly rates, as set forth following. The Term Discount percentages for the Synchronous Optical Channel Service Term Discount are as set forth in 17.3.10(D) following. (T)

Discounts for the Synchronous Optical Channel Service Optional Rate Plan A are only applied to Synchronous Optical Channel Service provided to a customer within the same state and LATA by the same Telephone Company. (T)

OC3 Synchronous Optical Channel Service may be ordered at the customer's option on a monthly rate basis or for Term Discount periods of 36 months (3 years) or 60 months (5 years).

The minimum service period for all term discount plans is twelve months. The customer must specify the length of the service commitment period at the time the service is ordered.

For customers that subscribe to the Term Discount plan for 36 or 60 months, the Term Discount percentage as set forth in 17.3.10(D) following will be frozen from Company initiated decreases, for the entire discount period at the percent in effect at the beginning of the Term Discount period.

If a Term Discount percentage increase occurs during the term of an existing Term Discount plan, the increased percentage will be applied automatically to the remainder of the current Term Discount period .

ACCESS SERVICE

7. Special Access Service (Cont'd)

7.2 Rate Regulations (Cont'd)

7.2.9 Other Optional Rate Plans (Cont'd)

(A) Synchronous Optical Channel Service Optional Rate Plan A (Cont'd) (T)

At the end of the Term Discount period, the customer may convert to month-to-month service or subscribe to a new Term Discount plan. If the customer does not make a choice by the end of the discount period, the rates will automatically convert to month-to-month service rates. The minimum service period on a monthly rate basis is twelve months for Synchronous Optical Channel Service.

To be included in a Term Discount plan, all eligible Synchronous Optical Channel Service rate elements must be ordered for the same commitment term (i.e., all 36 months or all 60 months) and with the same service date. When additional capacity is subsequently added, it will be available only on a month-to-month basis unless the discount period of the entire service is upgraded.

Eligible OC3 Synchronous Optical Channel Service rate elements are those Channel Terminations, Channel Mileage Facility, Channel Mileage Terminations, Customer Nodes, Customer Premises Ports and Central Office Ports provided to a customer within the same state and LATA by the same Telephone Company. As long as the number of OC3s included in a Term Discount plan remains constant, customer requests to install and disconnect OC3 service, including changes affecting different wire centers and/or customer designated premises, will not change the current Term Discount period or the minimum service period, and Discontinuance of Service charges as set forth in (3) following will not apply.

ACCESS SERVICE

7. Special Access Service (Cont'd)

7.2 Rate Regulations (Cont'd)

7.2.9 Other Optional Rate Plans (Cont'd)

(A) Synchronous Optical Channel Service Optional Rate Plan A (Cont'd) (T)

(1) Upgrades in Term Discounts

Services provided under monthly rates or Term Discount rates may be upgraded to a Term Discount plan at any time without incurring nonrecurring charges or discontinuance charges for existing services. The new Term Discount plan must meet or exceed the service term of the plan being upgraded. For example, a service with a 36 month commitment period may be upgraded to a new 36 month, or 60 month service period. The monthly rates will be those that are in effect at the time the service is upgraded. A new minimum service period applies to all Synchronous Optical Channel Service that is upgraded.

ACCESS SERVICE

7. Special Access Service (Cont'd)

7.2 Rate Regulations (Cont'd)

7.2.9 Other Optional Rate Plans (Cont'd)

(A) Synchronous Optical Channel Service Optional Rate Plan A (Cont'd) (T)

(2) Discontinuance of Service

If the customer chooses to disconnect all or a portion of the service prior to the expiration of the Term Discount period, discontinuance charges will apply to the portion of the service being discontinued.

Should the customer choose to discontinue a Term Discount plan prior to the completion of the minimum service period, discontinuance charges will apply. Discontinuance charges equal to one-hundred percent of the total undiscounted monthly rates, less any amounts previously paid, will apply for the minimum service period. Additionally, discontinuance charges of fifteen percent for OC3 service of the total undiscounted monthly charges will apply to the remaining portion of the discount service term.

Should the customer choose to discontinue service ordered under a Term Discount plan after the minimum service period but before the completion of the discount period, discontinuance charges will apply. Discontinuance charges of fifteen percent for OC3 Service of the total undiscounted monthly charges will apply to the remaining portion of the discount period. For example, a customer has an OC3 Service which it chooses to discontinue after 33 months into a 60-month service term. The discontinuance charge would be 0.15 times 27 months times the undiscounted monthly rates for that service.

ACCESS SERVICE

7. Special Access Service (Cont'd)

7.2 Rate Regulations (Cont'd)

7.2.9 Other Optional Rate Plans (Cont'd)

(B) Alternative Synchronous Optical Channel Service Term Discount Plan B (N)

The following Telephone Companies offer Synchronous Optical Channel Service under the Synchronous Optical Channel Service Term Discount Plan B:

Smart City Telecommunications LLC d/b/a Smart City Telecom.

(1) Alternative Synchronous Optical Channel Service Term Discount Plan B (TDPB) is a payment plan which allows customers to pay fixed or variable rates for Synchronous Optical Channel Service equipment and facilities over fixed TDPB committed payment periods as follows.

(a) Synchronous Optical Channel Service 12 month fixed TDP monthly rates and charges.

(b) Synchronous Optical Channel Service 36 month fixed TDP monthly rates and charges.

(c) Synchronous Optical Channel Service 60 month fixed TDP monthly rates and charges.

(2) When the customer extends Synchronous Optical Channel Service beyond the final month of a committed service period, the current regular non-TDPB monthly rate applicable to service will apply until the service is cancelled or covered by a new TDPB. Rate stablization shall not apply after the conclusion of the committed fixed term TDPB service period.

(3) Termination Liability Charge

The termination liability charge is dependent on the TDPB term commitment period subscribed to by the customer and will be equal to the number of months remaining in the TDPB term commitment period multiplied by the monthly rate provided under the TDPB term commitment period. (N)

ACCESS SERVICE

7. Special Access Service (Cont'd)

7.2 Rate Regulations (Cont'd)

7.2.9 Other Optional Rate Plans (Cont'd)

(B) Alternative Synchronous Optical Channel Service Term Discount Plan B (Cont'd) (N)

(4) Application of TDPB Rates and Charges

(a) Rates stabilized under a TDP arrangement are exempt from Company initiated increases until the end of the committed fixed term service period, however, decreases for any rate element will automatically flow through to the customer.

(b) In the event that all or any part of a service is disconnected at customer request prior to expiration of any selected committed fixed term payment period of greater than one month's duration, the customer will be required to pay a termination liability charge.

(c) When customers renew or change the length of their fixed term committed payment period, the rates applicable for the new period are those currently in effect at the time of the renewal for the length of the new fixed term committed payment period. A service order charge will not be applicable for such renewals or changes to the fixed term committed payment period.

(d) Recurring rates and installation, termination, service establishment, Service Connection and other nonrecurring charges apply according to the appropriate schedules for services offered as associated items to Synchronous Optical Channel Service, and are filed elsewhere in this Tariff.

(e) Customer requests for inside moves of service will not affect the TDP commitment period. (N)

ACCESS SERVICE

7. Special Access Service (Cont'd)

7.2 Rate Regulations (Cont'd)

7.2.9 Other Optional Rate Plans (Cont'd)

(B) Alternative Synchronous Optical Channel Service Term Discount Plan B (Cont'd) (N)

(5) Additions

(a) Additions of services or rate elements for activating spare or unused capacities of a service under a TDP arrangement will be considered part of the existing TDP arrangement.

(b) Additions of services or rate elements, i.e. new local channels, interoffice channels, etc., other than for activating spare or unused capacities, must be under a new TDP arrangement.

(c) Termination liability charges for premature disconnection of added services subject to a TDP commitment will apply as set forth under Disconnects as stated in Section 7.2.9(B)(6) following.

(d) Additions under TDP are exempt from Company-initiated rate changes for all committed payment periods longer than one month. However, decreases for any rate element will automatically flow through to the customer.

(e) Installation, service order, service establishment, and any other nonrecurring charges, as specified in this Tariff, will apply to the added Synchronous Optical Channel Service.

(6) Disconnects

(a) When a service or rate element, included under a Synchronous Optical Channel Service TDPB arrangement, is disconnected prior to expiration of the selected fixed term commitment service period, termination liability charges apply. Remaining services or rate elements will not be affected by such disconnections. (N)

ACCESS SERVICE

7. Special Access Service (Cont'd)

7.2 Rate Regulations (Cont'd)

7.2.9 Other Optional Rate Plans (Cont'd)

(B) Alternative Synchronous Optical Channel Service Term Discount Plan B (Cont'd) (N)

(6) Disconnects (Cont'd)

(b) When a tariffed service under a TDPB arrangement is disconnected prior to the expiration of a selected fixed term commitment service period as a result of a customer requested change to a higher order of a separately tariffed service, termination liability charges will not apply when:

- the completed service period is twelve months, or twenty-five percent of the length of the originally selected TDP service period, whichever is greater, and

- the service period of the new TDP arrangement for the higher equals/exceeds the remaining service period of the disconnected arrangement, whichever is greater, and

- the service orders to install the new higher order of service and disconnect the old service are related together and there is no lapse in service between installation of the higher order of service and disconnection of the existing service, and

- the service orders are for the same customer at the same location.

(7) Moves of Equipment

Customer requests for moves of service(s) under TDPB, other than inside moves, will be subject to the conditions stated in Section 7.2.9(B)(9) following.

(8) Transfer of Service

Service may be transferred to a new customer at the same location upon prior written concurrence by the new customer as specified in this Tariff. This does not constitute a disconnect of service or a discontinuance of an existing TDPB arrangement. The new customer will be subject to all provisions and equipment configurations currently in effect for the previous customer. Regulations concerning transfer of service between customers as stated in other sections of this Tariff also apply under TDPB. (N)

ACCESS SERVICE

7. Special Access Service (Cont'd)

7.2 Rate Regulations (Cont'd)

7.2.9 Other Optional Rate Plans (Cont'd)

(B) Alternative Synchronous Optical Channel Service Term Discount Plan B (Cont'd) (N)

(9) Moves of Service(s) Under TDPB

Termination Liability Charges will not apply to customer requests for moves of service under TDPB from one location to another location subject to the following:

(a) The original and new premises locations must be in Company territory within the same state.

(b) The move from the original location to the new location must be completed within thirty days of the original premises disconnect date.

(c) No lapse in billing will occur for moves of service under a TDPB.

(d) Orders to disconnect the existing service and reestablish it at the new location must be related.

(e) Any local channels, interoffice channels, and/or optional features and functions from the original location that are not reestablished at the new location will be subject to applicable Termination Liability charges.

(f) Any additions made at the new location will be treated as coterminous additions in accordance with 7.2.9(B)(5) preceding.

(g) All regulations and charges for changes made to the service coincident to the move shall apply.

(h) All appropriate nonrecurring charges for moves of service as specified in this Tariff will apply. (N)

ACCESS SERVICE

7. Special Access Service (Cont'd)

7.3 Surcharge for Special Access Service

7.3.1 General

Special Access Services provided under this tariff may be subject to the monthly Special Access Surcharge. (T)

7.3.2 Application

(A) The Special Access Surcharge will apply to each interstate Special Access Service that terminates on an end user's PBX or other device, where through a function of the device, the Special Access Service interconnects to the local exchange network. Interconnection functions include, but are not limited to, wiring and software functions, bridging, switching or patching of calls or stations. The Surcharge will apply irrespective of whether the interconnection function is performed in equipment located at the customer's premises or in a Centrex CO-type switch.

(B) Special Access Service will be exempted from the Surcharge by the Telephone Company upon receipt of the customer's written certification for the following Special Access Service terminations:

(1) an open-end termination in a Telephone Company switch of an FX line, including CCSA and CCSA- equivalent ONALs; or

(2) an analog channel termination that is used for radio or television program transmission; or

(3) a termination used for TELEX service; or

(4) a termination that by the nature of its operating characteristics could not make use of Telephone Company common lines such as, terminations which are restricted through hardware or software; or

ACCESS SERVICE

7. Special Access Service (Cont'd)

7.3 Surcharge for Special Access Service (Cont'd) (T)

7.3.2 Application (Cont'd)

(B) (Cont'd)

(5) a termination that interconnects either directly or indirectly to the local exchange network where the usage is subject to Carrier Common Line charges such as, where the Special Access Service accesses only FGA and no local exchange lines, or Special Access Service between customer points of termination, or Special Access Service connecting CCSA or CCSA-type equipment (inter-machine trunks); or

(6) a termination that the customer certifies to the Telephone Company is not connected to a PBX or other device which interconnects the Special Access Service to a local exchange subscriber line.

7.3.3 Exemption of Special ACCESS SERVICE

(A) Special Access Services which are terminated as set forth in 7.3.2(B) preceding will be exempted from the Special Access Surcharge if the customer provides the Telephone Company with written exemption certification. The certification may be provided to the Telephone Company as follows:

- at the time the Special Access Service is ordered or installed;
- at such time as the service is reterminated to a device which does not interconnect the service to local exchange facilities; or
- at such time as the service becomes associated with a Switched Access Service that is subject to Carrier Common Line Charges.

ACCESS SERVICE

7. Special Access Service (Cont'd)

7.3 Surcharge for Special Access Service (Cont'd) (T)

7.3.3 Exemption of Special Access Service (Cont'd) (T)

(B) The exemption certification is to be provided by the customer ordering the service. The certification must be signed by the customer or authorized representative and include the category of exemption, as set forth in 7.3.2(B) preceding, for each termination, and the date which the exemption is effective.

(C) The customer shall also notify the Telephone Company when an exempted Special Access Service is changed or reterminated such that the exemption is no longer applicable.

(D) The Telephone Company will work cooperatively with the customer to resolve any questions regarding the exemption certification. In addition, the Telephone Company may withhold exemption of the service until the questions are resolved.

7.3.4 Rate Regulations

(A) The surcharge will apply as set forth in 7.3.2(A) preceding, except that a surcharge will be assessed on a per voice grade equivalent basis for Special Access Services derived from High Capacity Special Access Services as illustrated in the following example:

Special Access Service	Voice Grade Equivalent		Surcharge		Monthly Charge
DS1	24	x	$25	=	$600.00

The preceding example illustrates the maximum number of surcharges applicable to a DS1. If the customer claims exemption(s) as set forth in 7.3.3 preceding or, is not utilizing all available voice grade equivalents and has spare capacity, the number of surcharges would be reduced accordingly.

In the case of multipoint Special Access Services, one Special Access Surcharge will apply for each termination of a Special Access Channel at an end user's premises.

ACCESS SERVICE

7. Special Access Service (Cont'd)

7.3 Surcharge for Special Access Service (Cont'd) (T)

7.3.4 Rate Regulations (Cont'd)

(B) The Telephone Company will bill the appropriate Special Access Surcharge to the ordering customer for each interstate Special Access Service installed unless exemption certification is provided as set forth in 7.3.3 preceding.

(C) If a written certification is not received at the time the Special Access Service is obtained, the Surcharge will be applied. Exempt status will become effective on the certification date indicated by the customer, subject to the regulations set forth in (D) following.

(D) Crediting the Surcharge

The Telephone Company will cease billing the Special Access Surcharge when certification, as set forth in 7.3.3 preceding, is received. If the status of the Special Access Service was changed prior to receipt of the exemption certification, the Telephone Company will credit the customer's account, not to exceed ninety (90) days, based on the effective date of the change as specified by the customer in the letter of certification.

ACCESS SERVICE

7. Special Access Service (Cont'd) (T)

7.4 Metallic Service

7.4.1 Basic Channel Description

A Metallic channel is an unconditioned two-wire channel arranged to transmit direct current and capable of transmitting low speed varying signals at rates up to 30 baud. This channel is provided by metallic or equivalent facilities. Metallic channels are provided between customer designated premises or between a customer designated premises and a Telephone Company hub or hubs where bridging functions are performed. Interoffice metallic facilities will be limited in length to a total of five miles per channel.

Metallic Special Access Services are typically used for applications such as alarm, pilot wire protective relaying, and dc tripping protective relaying. These examples of applications are not intended to limit a customer's use of the channel nor to imply that the channel is limited to a particular use. (T)

Rates and charges for Special Access Metallic Service are as set forth in 17.3.2 following.

7.4.2 Technical Specifications Packages and Network Channel Interfaces

Technical Specifications Packages are set forth in 15.2.1(A) following. Compatible network channel interfaces are set forth in 15.2.2(C)(1) following.

7.4.3 Optional Features and Functions

Central Office Bridging Capability

(A) Three Premises Bridging - Provision of tip-to-tip and ring-to-ring connection in a central office of a metallic pair to a third customer designated premises.

(B) Series Bridging of up to 26 customer designated premises.

The table set forth in 15.2.1(A) following shows the technical specifications packages with which the optional features and functions are available.

ACCESS SERVICE

7. Special Access Service (Cont'd)

7.5 Telegraph Grade Service

7.5.1 Basic Channel Description

Telegraph Grade channel is an unconditioned channel capable of transmitting binary signals at rates of 0-75 baud or 0-150 baud. This channel is furnished for half- duplex or duplex operation. Telegraph Grade channels are provided between customer designated premises or between a customer designated premises and a Telephone Company hub or hubs.

Telegraph Grade Special Access Services are typically used for applications such as teletypewriter, telegraph grade control/remote metering, telegraph grade channel, telegraph grade extension, and telegraph grade entrance facilities. These examples of applications are not intended to limit a customer's use of the channel nor to imply that the channel is limited to a particular use. (T)

Rates and charges for Special Access Telegraph Grade Service are as set forth in 17.3.3 following.

7.5.2 Technical Specifications Packages and Network Channel Interfaces

Technical Specifications Packages are set forth in 15.2.1(B) following. Compatible network channel interfaces are set forth in 15.2.2(C)(2) following.

7.5.3 Optional Features and Functions

Telegraph Bridging (two-wire and four-wire) (T)

The table set forth in 15.2.1(B) following shows the technical specifications packages with which the optional features and functions are available.

ACCESS SERVICE

7. Special Access Service (Cont'd)

7.6 Voice Grade Service

7.6.1 Basic Channel Description

A Voice Grade channel is a channel which provides voice frequency transmission capability in the nominal frequency range of 300 to 3000 Hz and may be terminated as two-wire or four-wire. Voice Grade channels are provided between customer designated premises, between a customer designated premises and a Telephone Company hub or hubs, or between a customer designated premises and a WATS Serving Office (WSO). (T)

Voice Grade Special Access Services are typically used for voice and voiceband data applications. Typical examples of voice grade circuits are Foreign Exchange lines (station end only), multipoint private line, voice trunk type, two-point voice grade data (one-way or simultaneous two-way), multipoint voice grade data, and voice grade telephoto or facsimile. These examples of applications are not intended to limit a customer's use of the channel nor to imply that the channel is limited to a particular use. (T)

Rates and charges for Special Access Voice Grade Service are as set forth in 17.3.4 following.

7.6.2 Technical Specifications Packages and Network Channel Interfaces

Technical Specifications Packages are set forth in 15.2.1(C) following. Compatible network channel interfaces are set forth in 15.2.2(C)(3) following.

7.6.3 Optional Features and Functions

(A) Central Office Bridging Capability

(1) Voice Bridging (two-wire and four-wire)

(2) Data Bridging (two-wire and four-wire)

(3) Telephoto Bridging (two-wire and four-wire)

(4) DATAPHONE Select-A-Station Bridging with sequential arrangement ports or addressable arrangement ports

ACCESS SERVICE

7. Special Access Service (Cont'd)

7.6 Voice Grade Service (Cont'd)

7.6.3 Optional Features and Functions (Cont'd)

(A) Central Office Bridging Capability (Cont'd)

(5) Telemetry and Alarm Bridging

Split Band, Active Bridging
Passive Bridging
Summation, Active Bridging

The rates for these options are set forth in 17.3.4(C)(1)(e) following.

(B) Central Office Multiplexing

Voice to Telegraph Grade. An arrangement that converts a Voice Grade channel to Telegraph Grade channels using frequency division multiplexing.

The rate for this option is set forth in 17.3.4(C)(5) following.

(C) Conditioning

Conditioning provides more specific transmission characteristics for Voice Grade services. The rates for these options are set forth in 17.3.4(C) following.

For two-point services, the parameters apply to each service as measured end-to-end. For multipoint services, the parameters apply as measured on each mid-link or as measured on each end link. C-Type conditioning and Data Capability may be combined on the same service.

ACCESS SERVICE

7. Special Access Service (Cont'd)

7.6 Voice Grade Service (Cont'd)

7.6.3 Optional Features and Functions (Cont'd)

(C) Conditioning (Cont'd)

(1) C-Type Conditioning

C-Type Conditioning is provided for the additional control of attenuation distortion and envelope delay distortion on data services. The attenuation distortion and envelope delay distortion specifications for C-Type Conditioning are delineated in Technical Reference TR-TSY-000335. (x) (x)

(2) Improved Attenuation Distortion*

Improved Attenuation Distortion upgrades the frequency versus loss limits of the channel. The technical specifications for Improved Attenuation Distortion are delineated in Technical Reference TR-TSY-000335. This option is available only when ordered in combination with C-Type Conditioning. (x)

(3) Improved Envelope Delay Distortion*

Improved Envelope Delay Distortion upgrades the frequency versus delay response limits of the channel. The technical specifications for Improved Envelope Delay Distortion are delineated in Technical Reference TR-TSY-000335. This option is available only when ordered in combination with C-Type Conditioning. (x)

* Improved Attenuation Distortion and Improved Envelope Delay Distortion will continue to be provided to all customers who were provided with either or both of these optional features in conjunction with C-Type Conditioning prior to May 4, 1988.

(x) Filed under authority of Special Permission No. 93-598 of the Federal Communications Commission.

ACCESS SERVICE

7. Special Access Service (Cont'd)

7.6 Voice Grade Service (Cont'd)

7.6.3 Optional Features and Functions (Cont'd)

(C) Conditioning (Cont'd)

(4) Data Capability (D Conditioning)

Data Capability provides transmission characteristics suitable for data communications. Specifically, Data Capability provides for the control of Signal to C-Notched Noise Ratio and intermodulation distortion. It is available for two-point services or three-point multipoint services.

The Signal to C-Notched Noise Ratio and intermodulation distortion parameter for Data Capability are delineated in Technical Reference TR-TSY-000335. The rate for this option is set forth in 17.3.4(C)(2) following. (x) (x)

When a service equipped with Data Capability is used for voice communications, the quality of the voice transmission may not be satisfactory.

(5) Telephoto Capability

Telephoto Capability provides transmission characteristics suitable for telephotographic communications. Specifically, Telephoto Capability is provided for the control of attenuation distortion and envelope delay distortion on telephotographic services. The attenuation distortion and envelope delay distortion parameters for Telephoto Capability are delineated in Technical Reference TR-TSY-000335 . (x) (x)

The rate for this option is set forth in 17.3.4(C)(2) following.

(6) Sealing Current Conditioning

Sealing Current Conditioning is provided to help maintain continuity on dry metallic loops. It is usually associated with four-wire DA or NO type network channel interfaces.

(x) Filed under authority of Special Permission No. 93-598 of the Federal Communications Commission.

ACCESS SERVICE

7. Special Access Service (Cont'd)

7.6 Voice Grade Service (Cont'd)

7.6.3 Optional Features and Functions (Cont'd)

(D) Customer Specified Premises Receive Level

This option allows the customer to specify the receive level at the Point of Termination. The level must be within a specific range on effective four- wire transmission. The ranges are delineated in Technical Reference TR-TSY-000335. The rate for this option is set forth in 17.3.4(C)(4) following. (x)

(E) Improved Return Loss

(1) On Effective Four-Wire Transmission at Four-Wire Point of Termination (applicable to each two- wire port): Provides for a fixed 600 ohm impedance, variable level range and simplex reversal. Telephone Company equipment is required at the customer's premises where this option is ordered. The Improved Return Loss parameters are delineated in Technical Reference (x)
TR-TSY-000335. The rate for this option is set forth in (x)
17.3.4(C)(3) following.

(2) On Effective Two-Wire Transmission at Two-Wire Point of Termination: Provides for more stringent Echo Control specifications. In order for this option to be applicable, the transmission path must be four-wire at one POT and two-wire at the other POT. Placement of Telephone Company equipment may be required at the customer's premises with the two-wire POT. The Improved Return Loss parameters are delineated in (x)
Technical Reference TR-TSY-000335. The rate for this option (x)
is set forth in 17.3.4(C)(3) following.

(x) Filed under authority of Special Permission No. 93-598 of the Federal Communications Commission.

ACCESS SERVICE

7. Special Access Service (Cont'd)

7.6 Voice Grade Service (Cont'd)

7.6.3 Optional Features and Functions (Cont'd)

(F) Signaling Capability

Signaling Capability provides for the ability to transmit signals from one customer premises to another customer premises on the same service. The rate for this option is set forth in 17.3.4(C)(6) following.

The following network channel interfaces for Voice Grade service do not require signaling capability: AH, DA, DB, DD, DE, DS, NO, PR and TF.

The following network channel interfaces for Voice Grade service require signaling capability: AB, AC, CT, DX, DY, EA, EB, EC, EX, GO, GS, LA, LB, LC, LO, LR, LS, RV and SF. The signaling capability charge will not apply when used in the provision of WATS access service.

(G) Selective Signaling Arrangement

An arrangement that permits code selective ringing for up to ten codes on a multipoint service. The rate for this option is set forth in 17.3.4(C)(7) following.

ACCESS SERVICE

7. Special Access Service (Cont'd)

7.6 Voice Grade Service (Cont'd)

7.6.3 Optional Features and Functions (Cont'd)

(H) Transfer Arrangement

An arrangement that affords the customer an additional measure of flexibility in the use of an access channel(s). The arrangement can be utilized to transfer a leg of a Special Access Service to another channel that terminates in either the same or a different customer premises. A key activated or dial-up control service is required to operate the transfer arrangement. A spare channel, if required, is not included as part of the option. The rate for this option is set forth in 17.3.4(C)(8) following.

(I) Public Packet Switching Network (PPSN) Interface Arrangement

An arrangement that provides the interface requirements that permit a Voice Grade service to interface with a Public Packet Switching Network packet switch located in a Telephone Company premises. The interface is compatible with X.25 and X.75 packet switching protocols as defined by the CCITT. This option is provided on an Individual Case Basis as set forth in 17.3.4(C)(9) following.

(J) Four-Wire/Two-Wire Conversions

When a customer requests that an effective four-wire channel be terminated with a two-wire channel interface at the customer designated premises, a four-wire to two-wire conversion is required. The customer will be charged the four-wire Channel Termination rate as set forth in 17.3.4(A) following when an effective four-wire is specified in the order for service. The rate for the conversion is included as part of the basic four-wire Channel Termination rate.

ACCESS SERVICE

7. Special Access Service (Cont'd)

7.6 Voice Grade Service (Cont'd)

7.6.3 Optional Features and Functions (Cont'd)

(K) Improved Two-Wire Voice Transmission

(1) Loss Deviation

The maximum Loss Deviation of the 1004 Hz loss relative to the Expected Measured Loss (EML) is -4.0 dB to +4.0 dB.

(2) Attenuation Distortion

The maximum Attenuation Distortion in the 404 to 280 Hz frequency band relative to loss at 1004 Hz is -2.0 dB to +6.0 dB.

(3) C-Message Noise

The maximum C-Message Noise for the transmission path at the route miles listed is less than:

Route Miles	C-Message Noise
less than 50	35 dBrnco
51 to 100	37 dBrnco
101 to 200	40 dBrnco
201 to 400	43 dBrnco
401 to 1000	45 dBrnco

(4) Return Loss

The Return Loss, expressed as Echo Return Loss (ERL) and Singing Return Loss (SRL), is equal to or greater than:

ERL	13.0 dB
SRL	6.0 dB

The rate for the provision of Improved Two-Wire Voice Transmission is included as part of the basic Channel Termination rate.

ACCESS SERVICE

7. Special Access Service (Cont'd)

7.7 Program Audio Service

7.7.1 Basic Channel Description

A Program Audio channel is a channel with bandwidth measured in Hz for the transmission of a complex signal voltage. The actual bandwidth is a function of the channel interface selected by the customer. Only one-way transmission is provided. Program Audio channels are provided between customer designated premises or between a customer designated premises and a Telephone Company hub or hubs.

Program Audio Special Access services are typically used in full-time and part-time applications for radio broadcasting, noncommercial educational audio, and wired music. These examples of applications are not intended to limit a customer's use of the channel nor to imply that the channel is limited to a particular use.

Rates and charges for Special Access Program Audio Service are as set forth in 17.3.5 following.

7.7.2 Technical Specifications Packages and Network Channel Interfaces

Technical Specifications Packages are set forth in 15.2.1(D) following. Compatible network channel interfaces are set forth in 15.2.2(C)(4) following.

7.7.3 Optional Features and Functions

(A) Central Office Bridging Capability

Distribution Amplifier

(B) Gain Conditioning

Control of 1004 Hz AML at initiation of service to 0 dB ± 0.5 dB.

ACCESS SERVICE

7. Special Access Service (Cont'd)

7.7 Program Audio Service (Cont'd)

7.7.3 Optional Features and Functions (Cont'd)

(C) Stereo

Provision of a pair of gain/phase equalized channels for stereo applications. (An additional Program Audio channel must be ordered separately.)

The table set forth in 15.2.1(D) following shows the technical specifications packages with which the optional features and functions are available.

ACCESS SERVICE

7. Special Access Service (Cont'd)

7.8 Video Service

7.8.1 Basic Channel Description

A Video channel is a channel with one-way transmission capability for a standard 525 line/60 field monochrome, or National Television Systems Committee color, video signal and one or two associated 5 or 15 kHz audio signal(s). The associated audio signal(s) may be either diplexed or provided as one or two separate channels. The provision and the bandwidth of the associated audio signal(s) is a function of the channel interface selected by the customer. Video channels are provided between customer designated premises or between a customer designated premises and a Telephone Company hub or hubs.

Rates and charges for Special Access Video Service are as set forth in 17.3.6 following.

7.8.2 Technical Specifications Packages and Network Channel Interfaces

Technical Specifications Packages are set forth in 15.2.1(E) following. Compatible network channel interfaces are set forth in 15.2.2(C)(5) following.

The following network channel interfaces (NCIs) define the bandwidth and the provision of the audio signal(s) associated with a Video channel:

NCI	Audio Bandwidth	Provision
2TV6-1	15kHz1	Channel, diplexed
2TV6-2	15kHz2	Channels, diplexed
2TV7-1	15kHz1	Channel, diplexed
2TV7-2	15kHz2	Channels, diplexed
4TV6-5	5kHz1	Channel, separate
4TV6-15	15kHz1	Channel, separate
4TV7-5	5kHz1	Channel, separate
4TV7-15	15kHz1	Channel, separate
6TV6-5	5kHz2	Channels, separate
6TV6-15	15kHz2	Channels, separate
6TV7-5	5kHz2	Channels, separate
6TV7-15	15kHz2	Channels, separate

ACCESS SERVICE

7. Special Access Service (Cont'd)

7.9 Digital Data Service

7.9.1 Basic Channel Description

A Digital Data channel is a channel for duplex four-wire transmission of synchronous serial data at the rate of 2.4, 4.8, 9.6, 19.2, 56.0 or 64.0* Kbps. The actual bit rate is a function of the channel interface selected by the customer. The channel provides a synchronous service with timing provided by the Telephone Company through the Telephone Company's facilities to the customer in the received bit stream. Digital Data channels are provided as either hubbed or non-hubbed services between customer designated premises or between a customer designated premises and a Telephone Company hub or hubs. The hubs providing hubbed digital service and the wire centers providing non-hubbed digital service are identified in NATIONAL EXCHANGE CARRIER ASSOCIATION, INC., TARIFF F.C.C. NO. 4 . (x)
(x)

The customer may provide the Channel Service Unit-type equipment or other Network Channel Terminating Equipment associated with the Digital Data channel at the customer premises.

The Telephone Company will provide a channel capable of meeting a monthly average performance equal to or greater than 99.875% error-free seconds (if provided through a Digital Data hub) while the channel is in service, if it is measured through a CSU equivalent which is designed, manufactured, and maintained to conform with the specifications contained in Technical Reference PUB62310 . (x)

Rates and charges for Special Access Digital Data Service are as set forth in 17.3.7 following.

7.9.2 Technical Specifications Packages and Network Channel Interfaces

Technical Specifications Packages are set forth in 15.2.1(F) following. Compatible channel interfaces are set forth in 15.2.2(C)(6) following.

* When 64.0 Kbps service is multiplexed on a DS1 High Capacity service, the DS1 must be equipped to provide Clear Channel Capability.

(x) Filed under authority of Special Permission No. 93-598 of the Federal Communications Commission.

ACCESS SERVICE

7. Special Access Service (Cont'd)

7.9 Digital Data Service (Cont'd)

7.9.2 Technical Specifications Packages and Network Channel Interfaces (Cont'd)

The following network channel interfaces (NCIs) define the bit rates that are available for a Digital Data channel:

NCI	Bit Rate
DU-24	2.4 Kbps
DU-48	4.8 Kbps
DU-96	9.6 Kbps
DU-19	19.2 Kbps
DU-56	56.0 Kbps
DU-64	64.0 Kbps

7.9.3 Optional Features and Functions

The Optional Features and Functions described in (A), (B), and (C) following are only available where Digital Data Service is provided via a hub. The Optional Features and Functions described in (D) following are available where Digital Data Service is provided on a non-hubbed basis. (N) (N)

(A) Central Office Bridging Capability

Bridging is not available on a 64.0 Kbps channel.

(B) Transfer Arrangement

An arrangement that affords the customer an additional measure of protection and/or flexibility in the use of their access channel(s) on a 1xN basis. The arrangement can be utilized to transfer a leg of a Special Access Service to either a spare or working channel that terminates in either the same or a different customer designated premises. This arrangement is only available at a Telephone Company designated hub. A key activated or dial-up control service is required to operate the transfer arrangement. A spare channel, if required, is not included as a part of the option.

(C) Public Packet Switching Network (PPSN) Interface Arrangement

An arrangement that provides the interface requirements that permit a Digital Data Service to interface with a Public Packet Switching Network packet switch located in a Telephone Company premises. The interface is compatible with X.25 and X.75 packet switching protocols as defined by the CCITT.

The table set forth in 15.2.1(F) following shows the technical specifications packages with which the optional features and functions are available.

ACCESS SERVICE

7. Special Access Service (Cont'd)

7.9 Digital Data Service (Cont'd)

7.9.3 Optional Features and Functions (Cont'd)

(D) Public Packet Data Service Interface Arrangement (N)

An arrangement that provides for the interface requirements that permit a Digital Data Service to interface with a Public Packet Data switch located in a Telephone Company premises. The interface is compatible with Frame Relay packet switching protocols. The interface is only available for 56.0 kbps and 64.0 kbps rates.

The table set forth in 15.2.1 (F) following shows the technical specifications packages with which the optional features and functions are available. (N)

ACCESS SERVICE

7. Special Access Service (Cont'd)

7.10 High Capacity Service

7.10.1 Basic Channel Description

A High Capacity channel is a channel for the transmission of nominal 64.0 Kbps* or 1.544, 3.152, 6.132, 44.736, or 274.176 Mbps isochronous serial data. The actual bit rate is a function of the channel interface selected by the customer. High Capacity channels are provided between customer designated premises or between a customer designated premises and a Telephone Company hub or hubs.

The customer may provide the Network Channel Terminating Equipment associated with the High Capacity channel at the customer's premises.

A channel with technical specifications package HC1 will be capable of an error-free second performance of 98.75% over a continuous 24 hour period as measured at the 1.544 Mbps rate through a CSU equivalent which is designed, manufactured, and maintained to conform with the specifications contained in Technical Reference PUB 62411.

Rates and charges for Special Access High Capacity Service are as set forth in 17.3.8 following.

* Available only as a channel of a 1.544 Mbps facility to a Telephone Company Digital Data hub or as a cross connect of two 2.4, 4.8, 9.6, 56.0 or 64.0 Kbps channels of two 1.544 Mbps facilities to a Digital Data hub(s). The customer must provide system and channel assignment data.

ACCESS SERVICE

7. Special Access Service (Cont'd)

7.10 High Capacity Service (Cont'd)

7.10.2 Technical Specifications Packages and Network Channel Interfaces

Technical Specifications Packages are set forth in 15.2.1(G) following. Compatible channel interfaces are set forth in 15.2.2(C)(7) following.

The following network channel interfaces (NCIs) define the bit rates that are available for a High Capacity channel:

NCI	Bit Rate
DS-15*	1.544 Mbps (DS1)
DS-27	274.176 Mbps (DS4)
DS-31	3.152 Mbps (DS1C)
DS-44	44.736 Mbps (DS3)
DS-63	6.312 Mbps (DS2)

* A 64.0 Kbps channel is available as a channel(s) of a 1.544 Mbps channel to a Telephone Company hub.

ACCESS SERVICE

7. Special Access Service (Cont'd)

7.10 High Capacity Service (Cont'd)

7.10.3 Optional Features and Functions

(A) Automatic Loop Transfer

The Automatic Loop Transfer provides protection on a 1xN basis against failure of the facilities between a customer designated premises and the wire center serving that premises. Protection is furnished through the use of a switching arrangement that automatically switches to a spare channel line when a working line fails. The spare channel is not included as a part of the option. This option requires compatible equipment at both the serving wire center and the customer designated premises. The customer is responsible for providing the equipment at its designated premises. Equipment at the customer designated premises will be provided under tariff only if it existed in the Telephone Company inventory as of November 18, 1983.

(B) Transfer Arrangement

An arrangement that affords the customer an additional measure of flexibility in the use of their access channel(s). The arrangement can be utilized to transfer a leg of a Special Access Service to either a spare or working channel that terminates in either the same or a different customer designated premises. A key activated or dial-up control service is required to operate the transfer arrangement. A spare channel, if required, is not included as part of the option.

ACCESS SERVICE

7. Special Access Service (Cont'd)

7.10 High Capacity Service (Cont'd)

7.10.3 Optional Features and Functions (Cont'd)

(C) Central Office Multiplexing

(1) DS4 to DS1

An arrangement that converts a 274.176 Mbps channel to 168 DS1 channels using digital time division multiplexing.

(2) DS3 to DS1

An arrangement that converts a 44.736 Mbps channel to 28 DS1 channels using digital time division multiplexing. (N)

(3) DS2 to DS1

An arrangement that converts a 6.312 Mbps channel to four DS1 channels using digital time division multiplexing.

(4) DS1C to DS1

An arrangement that converts a 3.152 Mbps channel to two DS1 channels using digital time division multiplexing.

(5) DS1 to Voice

An arrangement that converts a 1.544 Mbps channel to 24 channels for use with Voice Grade Services. A channel(s) of this DS1 to the Hub can also be used for a Digital Data Service.

(6) DS1 to DS0

An arrangement that converts a 1.544 Mbps channel to 23 64.0 Kbps channels utilizing digital time division multiplexing.

ACCESS SERVICE

7. Special Access Service (Cont'd)

7.10 High Capacity Service (Cont'd)

7.10.3 Optional Features and Functions (Cont'd)

(C) Central Office Multiplexing (Cont'd)

(7) DS0 to Subrate

An arrangement that converts a 64.0 Kbps channel to subspeeds of up to twenty 2.4 Kbps, ten 4.8 Kbps, or five 9.6 Kbps channels using digital time division multiplexing.

The table set forth in 15.2.1(G) following shows the technical specifications packages with which the optional features and functions are available.

(D) Clear Channel Capability (CCC)

(1) CCC is an arrangement that allows a customer to transport 1.536 Mbps information rate signals over a 1.544 Mbps High Capacity channel or over a 1.544 Mbps High Capacity channel derived from a multiplexed 44.736 Mbps High Capacity channel with no constraint on the quantity or sequence of one and zero bits. This arrangement requires the customer signal at the channel interface to conform to Bipolar with Eight Zero Substitution (B8ZS) line code as described in Technical Reference TR-NPL-000054 and Technical Reference TR-INS-000342 . (x) (x)

(2) CCC is provided, subject to availability of facilities, on DS1/1.544 Mbps High Capacity channels between two customer designated premises and on multiplexed DS3/44.736 Mbps High Capacity channels or multiplexed DS1/1.544 Mbps High Capacity channels* between a Telephone Company hub office and a customer designated premises. The wire centers providing CCC are identified in NATIONAL EXCHANGE CARRIER ASSOCIATION, INC., TARIFF F.C.C. NO. 4. (x) (x) (T) (x)

(3) The CCC optional feature may be ordered at the same time the High Capacity service is ordered or it may be ordered as an addition to an existing High Capacity Service. The customer must agree to out-of-service periods required to add this feature to an existing High Capacity Service. The charges for the CCC optional feature are as set forth in 7.2.2 (C)(3) preceding. (x) (T)

* Available only on a DS1-to-Digital multiplexed configuration.

(x) Filed under authority of Special Permission No. 93-598 of the Federal Communications Commission.

ACCESS SERVICE

7. Special Access Service (Cont'd)

7.10 High Capacity Service (Cont'd)

7.10.3 Optional Features and Functions (Cont'd)

(E) DSL Access Service Connection

(1) The DSL Access Service Connection function provides for the interconnection of a 1.544 Mbps or 44.736 Mbps High Capacity Service with ADSL Access Service as described in 16.2.1, following and with SDSL Access Service as described in 16.3.1, following.

Rates and charges for the DSL Access Service Connection function are as set forth in 17.3.8, following. This function applies to each 1.544 Mbps or 44.736 Mbps High Capacity Service terminated at a DSL Access Service Connection Point.

(F) High Speed Internet (HSI) Access Service Connection

(1) The High Speed Internet (HSI) Access Service Connection function provides for the interconnection of a 1.544 Mbps or 44.736 Mbps High Capacity Service with HSI Access Service as described in 16.6.1, following.

Rates and charges for the HSI Access Service Connection function are as set forth in 17.3.8, following. This function applies to each 1.544 Mbps or 44.736 Mbps High Capacity Service terminated at an HSI Access Service Connection Point.

(G) 44.736 Mbps-STS-1 Interface (N)

(1) For customers who subscribe to a 44.736 Mbps High Capacity Service Channel Termination, the Telephone Company will provide as a non-chargeable Optional Feature a connection of the Channel Termination to the customer's STS-1 (Synchronous Transport Signal-1) at the Customer Designated Premises. The H44.736 Mbps- STS-1 Interface does not include any multiplexing or optical to electrical interface functions. (N)

ACCESS SERVICE

7. Special Access Service (Cont'd)

7.11 Synchronous Optical Channel Service

7.11.1 Basic Channel Description

A Synchronous Optical Channel Service (SOCS) channel provides dedicated transport utilizing Synchronous Optical Network (SONET) transmission standards. SOCS provides optical network capability to customers requiring connections at transmission rates of 155.52 Mbps (OC3) and 622.08 Mbps (OC12). SOCS is provided between two customer designated premises (CDP) through one or more Telephone Company wire center(s) or between a CDP and a wire center equipped with Asynchronous Transfer Mode Cell Relay Service or a wire center equipped with Add/Drop Multiplexing (ADM). In addition, customers at an ADM equipped wire center may add or drop bandwidth capacity from the synchronous optical channel for delivery to a customer premises, Public Packet Data Network Service or another wire center. (T) (T) (C) (C) (C) (C) (C)

The OC3 channel is available in a non-concatenated format (OC3) which provides three individual signals. The OC3 channel is also available in a concatenated format (OC3c) which provides a single signal appropriate for data transmissions. (N) | (N)

Each channel will be configured with one working and one protect fiber pair within the same sheath between the CDP and the serving wire center of the CDP which provides redundancy to protect the customer's service. Should a failure occur, the SONET technology will automatically switch the customer's transmission to the dedicated protect fiber pair.

The customer may provide node and port equipment at the CDP which allows the high speed optical carrier channel to be converted to an electrical signal at a lower speed. The provision of such equipment by the customer is subject to compatibility with the Telephone Company's equipment in the serving wire center and must comply with the standards specified in GR-253-CORE.

Certain material previously found on this page now appears on Original Page 7-59.1.

ACCESS SERVICE

7. Special Access Service (Cont'd)

7.11 Synchronous Optical Channel Service (Cont'd)

7.11.1 Basic Channel Description (Cont'd)

Telephone Carriers may make available term discounts for SOCS rate elements and optional features and functions under either Synchronous Optical Channel Service Optional Rate Plan A as set forth in Section 7.2.9(A) preceding or Synchronous Optical Channel Service Optional Rate Plan B as set forth in Section 7.2.9(B) preceding. Telephone Companies offering discounts under Synchronous Optical Channel Service Option Plan A are listed at the beginning of Section 7.2.9(A). Telephone Companies offering discounts under Synchronous Optical Channel Service Optional Plan B are listed at the beginning of Section 7.2.9(B). (C) (M) (C) (M)

SOCS is available at the wire centers as identified in National Exchange Carrier Association, Inc. Tariff F.C.C. No. 4. (N) (N)

Rates and charges for SOCS are as set forth in 17.3.10 following. (M)

Telephone Companies offering SOCS provide services under either SOCS Rate Regulations I at Section 7.11.3 or SOCS Rate Regulations II at Section 7.11.4. Telephone Companies offerings SOCS under SOCS Rate Regulations I are listed at the beginning of Section 7.11.23 and Telephone Companies offering SOCS under Rate Regulations II are listed at the beginning of Section 7.11.4. (N) (N)

7.11.2 Network Channel Interfaces (M)

Compatible channel interfaces for Synchronous Optical Channel Service are as set forth in 15.2.2(C)(8) following

The following network channel interfaces (NCIs) define the bit rates that are available for a synchronous optical channel:

NCI	Bit Rate
FCF-B	155.52 Mbps (OC3, OC3c)
FCF-D	622.08 Mbps. (OC12)

(C) (M) (N)

Certain material currently found on this page formerly appeared on 1st Revised Page 7-59 and Original Page 7-60.

ACCESS SERVICE

7. Special Access Service (Cont'd)

7.11 Synchronous Optical Channel Service (Cont'd)

7.11.3 SOCS Rate Regulations I (T)

The Telephone Companies listed below offer SOCS under the following rate regulations, SOCS Rate Regulations I herein. (N)

Fort Mill Telephone Company
Lancaster Telephone Company
Rock Hill Telephone Company

SOCS Channel Terminations, Channel Mileage Terminations and Channel Mileage Facility provided under SOCS Rate Regulations I are provided pursuant to Special Access rate regulations under Section 7.2 preceding. SOCS Optional Features and Functions are offered under the following regulations. (N)

(A) Customer Node (C)

A Customer Node charge applies when the Telephone Company provides terminal equipment at the customer designated premises for termination of a SOCS Channel Termination. Such equipment may be used to convert the signal from an optical to electrical format. The Customer Node charge is determined by the level of optical service (i.e., OC3, OC3c or OC12) delivered to the premises. Each Customer Node must be configured with one or more Customer Premises Ports. Rates and charges for the Customer Node are as set forth in 17.3.11(E)(1) following. (C)

ACCESS SERVICE

7. Special Access Service (Cont'd)

7.11 Synchronous Optical Channel Service (Cont'd)

7.11.3 SOCS Rate Regulations I (Cont'd) (T)

(B) Customer Premises Port (N)

Customer Premises Port charges apply in conjunction with the Customer Node charge. Each Customer Premises Port provides the interface to derive a lower capacity service at the customer premises. The type and quantity of ports is determined by the customer and is based on the type of Customer Node selected and the number of DS1, DS3, STS-1 and/or OC3/OC3c channels ordered. Customer Premises Ports are available at the following speeds:

Customer Premises Port	Speed
OC3, OC3c	155.52 Mbps
STS-1	51.84 Mbps
DS3	44.736 Mbps
DS1	1.544 Mbps

(N)

(C) Add/Drop Multiplexing (T)

An Add/Drop Multiplexing Central Office Port charge applies to the interface provided at a Telephone Company wire center for the purpose of adding or dropping lower capacity services from Synchronous Optical Channel Service Channel Termination or Channel Mileage transport facilities. Central Office Ports are available at the following speeds: Central Office Port Speed OC3, OC3c 155.52 Mbps DS3 44.736 Mbps DS1 1.544 Mbps OC12 service may only be multiplexed to OC3/OC3c channels. (C)

When an OC3 channel is derived from an OC12 service and is further multiplexed to obtain DS3 service, a DS3 port charge will apply in addition to the OC3 port charge. When a DS3 channel is derived from an OC3 service and is further multiplexed to obtain DS1 service, a DS3 to DS1 Multiplexing charge as set forth in 17.3.8(D)(1) will apply in addition to the DS3 port charge. When a DS1 channel is directly derived from an OC3 service, a DS1 port charge will apply. When a DS1 channel is further multiplexed to a lower level signal, a DS1 to Voice Grade Multiplexing charge as set forth in 17.3.8(D)(1) will also apply. Rates and charges for the Central Office Port are as set forth in 17.3.11(E)(2) following. (C)

ACCESS SERVICE

7. Special Access Service (Cont'd)

7.11 Synchronous Optical Channel Service (Cont'd)

7.11.3 SOCS Rate Regulations I (Cont'd) (T)

(D) Shared SONET Ring Interoffice Transport (N)

(1) Shared SONET Ring Interoffice Transport (SSRIT) is a non-chargeable optional feature which provides interoffice transmission of a Synchronous Optical Channel Service over a SONET-based facility deployed in a ring configuration. Shared SONET Ring Interoffice Transport provides increased reliability and functionality using a self-healing ring topology designed to continually monitor service quality, detect any failure within the system, and automatically self-heal within 50 milliseconds around the point of failure by switching to a protect path to ensure the flow of services between locations within the self-healing ring.

(2) Shared SONET Ring Interoffice Transport is provided for the interoffice portion of Synchronous Optical Channel Service, subject to availability of SONET ring facilities. The wire centers offering Shared SONET Ring Interoffice Transport are identified in NATIONAL EXCHANGE CARRIER ASSOCIATION, INC., WIRE CENTER INFORMATION, TARIFF F.C.C. NO. 4.

(3) The Shared SONET Ring Interoffice Transport optional feature may be ordered at the same time the Synchronous Optical Channel Service is ordered or it may be ordered as an addition to an existing Synchronous Optical Channel Service. The customer must agree to out-of-service periods required to add this feature to an existing Synchronous Optical Channel Service. The charges for the Shared SONET Ring Interoffice Transport optional feature are as set forth in 7.2.2.(C)(3) preceding. (N)

Certain material previously found on this page now appears on Original Page 7-61.2.

ACCESS SERVICE

7. Special Access Service (Cont'd)

7.11 Synchronous Optical Channel Service (Cont'd)

7.11.3 SOCS Rate Regulations I (Cont'd)

(E) DSL Access Service Connection (T) (M)

(1) The DSL Access Service Connection function provides for the interconnection of an OC3, OC3c or 100 Mbps Ethernet Synchronous Optical Channel Service with ADSL Access Service as described in 16.2.1, following, and with SDSL Access Service as described in 16.3.1, following.

Rates and charges for the DSL Access Service Connection function are as set forth in 17.3.10, following. This function applies to each OC3 or OC3c Synchronous Optical Channel or 100 Mbps Ethernet Channel terminated at a DSL Access Service Connection Point.

(F) High Speed Internet (HSI) Access Service Connection (T)

(1) The High Speed Internet (HSI) Access Service Connection function provides for the interconnection of an OC3, OC3c or 100 Mbps Ethernet Synchronous Optical Channel Service with HSI Access Service as described in 16.6.1, following.

Rates and charges for the HSI Access Service Connection function are as set forth in 17.3.10, following. This function applies to each OC3 or OC3c Synchronous Optical Channel or 100 Mbps Ethernet Channel terminated at an HSI Access Service Connection Point. (M)

Certain material currently found on this page formerly appeared on 1st Revised Page 7-61.1

ACCESS SERVICE

7. Special Access Service (Cont'd)

7.11 Synchronous Optical Channel Service (Cont'd)

7.11.4 SOCS Rate Regulations II (N)

The Telephone Company(ies) listed below offers SOCS under the following rate regulations, SOCS Rate Regulations II herein.

Smart City Telecommunications LLC d/b/a Smart City Telecom

SOCS Channel Terminations, Channel Mileage Terminations and Channel Mileage Facility provided under SOCS Rate Regulations II are provided pursuant to Special Access rate regulations under Section 7.2. preceding. SOCS Optional Features and Functions are offered under the following regulations.

(A) Channel Interfaces

Channel Interface Charges consist of the following:

- Central Office Channel Interfaces
- Customer Interfaces

Channel interfaces are required for SOCS based upon the following guidelines:

(1) Channel interfaces are required at both the customer's location and the serving wire center for SOCS local channel systems and at both termination points of a SOCS interoffice channel, except as specified in (2) following.

(2) A SOCS central office channel interface is not required for a SOCS local channel system with optical termination in the serving wire center. A SOCS local channel system with optical termination in the serving wire center may connect in one of the following ways:

- to another SOCS channel termination or interoffice channel at the compatible optical level, or

- to a compatible optical level channel interface from a higher level SOCS channel termination or interoffice channel.

A SOCS customer interface is not required for a SOCS channel termination with optical termination at the customer designated premises. A SOCS channel termination with optical termination at the customer designated premises must be connected in the following way:

- to a customer provided channel at the compatible optical level. (N)

ACCESS SERVICE

7. Special Access Service (Cont'd)

7.11 Synchronous Optical Channel Service (Cont'd)

7.11.4 SOCS Rate Regulations II (Cont'd) (N)

(A) Channel Interfaces (Cont'd)

(3) Channel Interfaces are available at 2 Wire and 4 Wire capacities.

(4) OC12 service local channel systems require a 28 DS1, STS1, or OC3 channel system in addition to DS1 channel interfaces in the central office to derive DS1 channels in the serving wire center.

(5) OC3 SOCS local channel systems which require a DS3 termination at one location and DS1 terminations at the other, have two options available:

- A DS3 channel interface at the customer location and a 28 DS1 channel system in addition to DS1 channel interfaces at the serving wire center, or

- A DS3 (asymmetrical with DS1) interface at one termination point and DS1 channel interfaces at the other termination point.

(6) For SOCS interoffice channel systems the following are applicable:

- A 28 DS1 channel system in addition to DS1 channel interfaces provides DS1 channel termination capability with SOCS.

- An OC3 channel system in addition to DS1 channel interfaces provides DS1 channel termination capability with OC3 and OC12 SOCS. (N)

ACCESS SERVICE

7. Special Access Service (Cont'd)

7.11 Synchronous Optical Channel Service (Cont'd)

7.11.4 SOCS Rate Regulations II (Cont'd) (N)

(B) Sample Application of SOCS Rate Elements

Diagram A

Connection between Customer Designated Premises (CDPs) served by different Company Wire Centers (assumes interstate connection by another service from one of the CDPs)

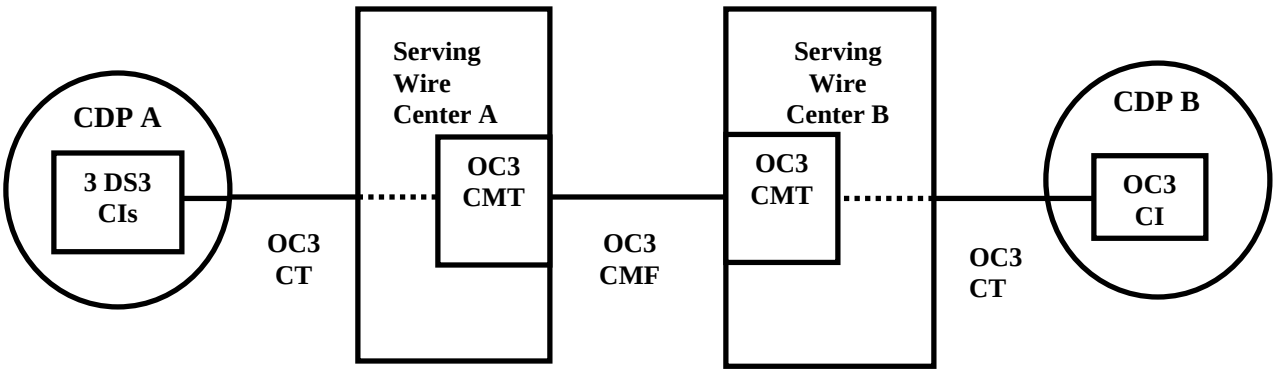

Synchronous Optical Channel Service Charges:

3 DS3 CIs - (Customer Interface between OC3 Local Channel and 3 customer DS3s)
2 OC3 CTs- (Channel Terminations – including mileage charges in excess of first ½ mile for each CT)*
2 OC3 CMTs (Channel Terminations)
1 OC3 CMF (Channel Mileage Facility at applicable mileage)
1 OC3 CI (Customer Interface between OC3 LC and customer OC3 or STS-1)

Note: Because an OC3 channel is established from CDP A to CDP B, there is no requirement for a Central Office Channel Interface.

* The Channel Termination charges will be based on the rates established for Channel Terminations without optical customer termination or optical central office termination because Customer Interfaces are provided by the Telephone Company at both customer designated premises at the applicable Customer Interface rate. See Section 7.2.1(A)(1) regarding rate regulations applicable to Channel Terminations for Telephone Companies providing Synchronous Optical Channel Service under SOCS Rate Regulations II. (N)

ACCESS SERVICE

7. Special Access Service (Cont'd)

7.11 Synchronous Optical Channel Service (Cont'd)

7.11.4 SOCS Rate Regulations II (Cont'd) (N)

(B) Sample Application of SOCS Rate Elements (Cont'd)

Diagram B

Connection between Customer Designated Premises (CDP) to Company Wire Center with connection to Interexchange Carrier or other Telecommunications Service Provider.

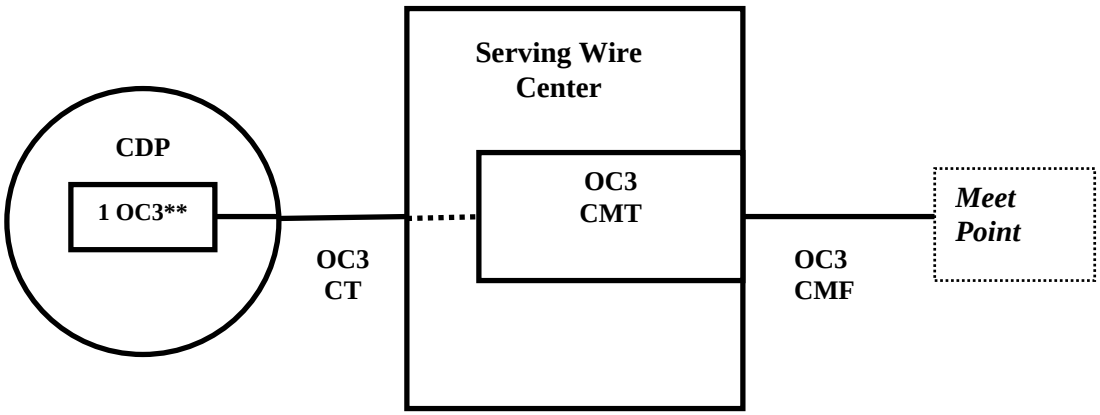

Synchronous Optical Channel Service Charges:

1 OC3 CT- (Channel Termination – including mileage charges in excess of first ½ mile*)
1 OC3 CMT (Channel Mileage Termination)
1 OC3 CMF (Channel Mileage Facility to Meet Point at applicable mileage)

* The Channel Termination charge will be based on the rate established for a Channel Termination with an optical customer termination and/or optical central office termination because neither a Customer Interface nor a Central Office Channel Interface is provided by the Telephone Company at the customer designated premises at the applicable Customer Interface rate. See Section 7.2.1(A)(1) regarding rate regulations applicable to Channel Terminations for Telephone Companies providing Synchronous Optical Channel Service under SOCS Rate Regulations II.

** Customer provides compatible synchronous optical channel connection at CDP. (N)

ACCESS SERVICE

7. Special Access Service (Cont'd)

7.11 Synchronous Optical Channel Service (Cont'd)

7.11.4 SOCS Rate Regulations II (Cont'd) (N)

(B) Sample Application of SOCS Rate Elements (Cont'd)

Diagram C

Connection between four Customer Designated Premises (CDPs) to Company Wire Center with connection to Interexchange Carrier or other Telecommunications Service Provider.

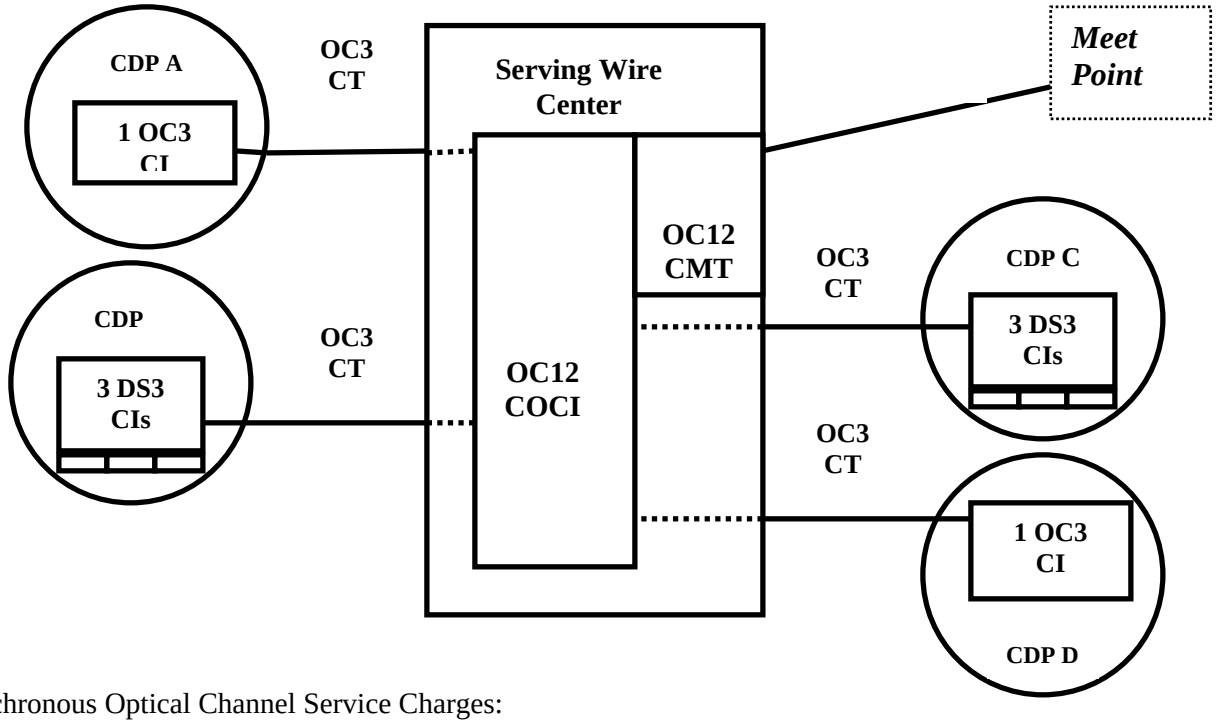

Synchronous Optical Channel Service Charges:

1 OC12 CMT (Channel Mileage Termination)
1 OC12 CMF (Channel Mileage Facility to Meet Point at applicable mileage)
1 OC12 COCI (Central Office Channel Interface)
4 OC3 CTs- (Channel Terminations – including mileage charges in excess of first ½ mile for each CT*)
2 OC3 CIs (Customer Interfaces for CDP A and CDP B)
6 DS3 CIs - (Customer Interfaces between OC3 Local Channels and CDP CPE DS3s at CDP B and CDP D)

* The Channel Termination charges will be based on the rates established for Channel Terminations without optical customer termination or optical central office termination because each Channel Termination has a at least a Customer Interface provided by the Telephone Company at the customer designated premises at the applicable Customer Interface rate. See Section 7.2.1(A)(1) regarding rate regulations applicable to Channel Terminations for Telephone Companies providing Synchronous Optical Channel Service under SOCS Rate Regulations II. (N)

ACCESS SERVICE

7. Special Access Service (Cont'd)

7.12 Digital Access Cross Connect Service (N) (x)

7.12.1 Service Description

Digital Access Cross Connect Service (DACCS) allows a customer to connect or disconnect a single or multiple switched and/or special service circuits to an access customer's interstate network. Such connections and disconnections must be performed by Company personnel based on an order received from the Customer. DACCS can only be ordered by those Customers of the Company already subscribing to High Capacity special access service (see Section 7 preceding) and will only be provided at a DS1 to DS1 cross-connect level.

Rates and charges for DACCS are set forth in 17.4.9 following.

The customer is responsible for providing the terminal equipment required for DACCS.

A Customer may differentiate the types of services that DACCS is to be used for. For example, a Customer may elect to use some of the capacity to cross-connect switched access services and some of the capacity to cross-connect with special access services. When provided as shared use, the Customer must provide the Telephone Company with the number of channels cross-connected to switched access services. The Company will use the number of channels cross-connected to switched access services to apply percent interstate usage (PIU) factors as set forth in section 2 preceding. When the cross-connect is provided as shared use and the Customer does not furnish the Company with the channels used to cross-connect with switched access service, the Company will, for purposes of PIU factor application, designate all channels for the purposes of cross-connect as special.

7.12.2 Service Configuration

The service includes an End User Port which permits connection of the end user customer's facilities to the Company's cross-connect equipment. A special access facility (ordered out of Section 7 preceding) is used to connect to the Company's cross-connect equipment. All regulations, rates and charges as specified in Section 7 will apply in addition to the rates and charges associated with DACCS. Connections are available at 1.544 Mbps.

In addition to the monthly charge for an End User Port, a charge will be assessed for any reconfiguration in DACCS ordered by a Customer. There are no restrictions in the number of monthly reconfigurations ordered by a Customer. (N) (x)

(x) Filed under authority of Special Permission No. 98-274 of the Federal Communications Commission.

ACCESS SERVICE

7. Special Access Service (Cont'd)

7.13 Individual Case Filings (M) (x)

Certain services set forth in Special Access Service, Section 7, are provided on an Individual Case Basis. Rates and charges for Special Access Service provided on an individual Case Basis are set forth in 17.3.9 following . (M) (x)

Certain material currently found on this page formerly appeared as Original Page 7-62.

(x) Filed under authority of Special Permission No. 98-274 of the Federal Communications Commission.

ACCESS SERVICE

8. Lifeline Assistance and Universal Service Fund Charges

(D) (x)

(x) Material previously found on this page has been removed pursuant to the Federal Communications Commission's Report and Order, Federal-State Joint Board on Universal Service, CC Docket No. 96-45, 62 Fed. Reg. 32862 (1997).

ACCESS SERVICE

9. Reserved for Future Use

ACCESS SERVICE

10. Special Federal Government Access Services

10.1 General

This section covers Special Access Services that are provided to a customer for use only by agencies or branches of the Federal Government and other users authorized by the Federal Government. Services provided to state emergency operations centers are included. These services provide for command and control communications, including communications for national security, emergency preparedness and presidential requirements. They are required to assure continuity of Government in emergency and crisis situations and to provide for national security.

Services for command and control communications and for national security and emergency preparedness sometimes require short notice and short duration service provisions. These provisions are especially needed to meet presidential requirements or in response to natural, man-made, or declared emergencies. Requirements of this type cannot be forecasted and are usually needed for a relatively short period. The provision of service under these conditions may require the availability of facilities, such as portable microwave equipment, which are provided on a temporary basis by the Telephone Company or customer.

ACCESS SERVICE

10. Special Federal Government Access Services (Cont'd)

10.2 Emergency Conditions

These services will be provided on the date requested or as soon as possible thereafter when the emergency falls into one of the following categories:

- State of crisis declared by the National Command Authorities (includes commitments made to the National Communications System in the "National Plan for Emergencies and Major Disasters").

- Efforts to protect endangered U.S. personnel or property both in the U.S. and abroad. (Includes space vehicle recovery and protection efforts.)

- Communications requirements resulting from hostile action, a major disaster or a major civil disturbance.

- The Director (Cabinet level) of a Federal department, Commander of a Unified/Specified Command, or head of a military department has certified that a communications requirement is so critical to the protection of life and property or to the National Defense that it must be processed immediately. (T)

- Political unrest in foreign countries which affect the national interest.

- Presidential service.

10.3 Facility Availability

In order to insure communications during periods of emergency, the Telephone Company will, within the limits of good management, make available the necessary facilities to restore service in the event of damage or to provide temporary emergency service.

In order to meet the requirements of agencies or branches of the Federal Government, the Telephone Company may utilize government- owned facilities, when necessary to provide service.

10.4 Federal Government Regulations

In accordance with Federal Government Regulations, all service provided to the Federal Government will be billed in arrears. However, this provision does not apply to other customers that obtain services under the provisions of this tariff to provide their services to the Federal Government.

ACCESS SERVICE

10. Special Federal Government Access Services (Cont'd)

10.5 Service Offerings to the Federal Government

The following unique services are provided to a customer for use only by agencies or branches of the Federal Government, other authorized users and state emergency operations centers. The rates and charges for these services shall be developed on an individual case basis and shall be consistent with the rates and charges for services offered in other sections of this tariff.

10.5.1 Type and Description

(A) Voice Grade Special Access Services

(1) Voice Grade Secure Communications Type I

Approximate bandwidth of 10-50,000 Hz. Furnished for two-point secure communications on two-wire or four-wire metallic facilities between a customer designated premises and an end user's premises. Services are conditioned as follows: (T)

T-3 Conditioning - The absolute loss (referenced to 1 milliwatt) with respect to frequency shall not exceed:

15	dB	at 10 Hz
13	dB	at 100 Hz
9	dB	at 1,000 Hz
20	dB	at 10,000 Hz
30	dB	at 50,000 Hz

Additional conditioning (available in one or two directions on four-wire facilities only) to provide the following characteristics:

The absolute loss (referenced to one milliwatt) with respect to frequency shall not exceed:

0 dB at 1,000 Hz
+ 1 dB between 1,000 Hz and 40,000 Hz
+ 2 dB between 10 Hz and 50,000 Hz
(+ means more loss)

ACCESS SERVICE

10. Special Federal Government Access Services (Cont'd)

10.5 Service Offerings to the Federal Government (Cont'd)

10.5.1 Type and Description (Cont'd)

(A) Voice Grade Special Access Services (Cont'd)

(1) Voice Grade Secure Communications Type I (Cont'd)

The net loss of the conditioned service (with or without additional conditioning) shall not vary by more than four dB at 1,000 Hz from the levels specified preceding. Voice frequency signaling or supervisory tones can be transmitted.

(2) Voice Grade Secure Communications Type II

Approximate bandwidth 10-50,000 Hz. Furnished on four-wire metallic facilities for duplex operation for two-point secure communications between a customer designated premises and an end user's premises. Services are conditioned as follows:

G-1 Conditioning - The absolute loss with respect to frequency and the net loss variation shall be the same as Voice Grade Secure Communications Type I services without additional conditioning. Voice frequency signaling or supervisory tones can be transmitted.

ACCESS SERVICE

10. Special Federal Government Access Services (Cont'd)

10.5 Service Offerings to the Federal Government (Cont'd)

10.5.1 Type and Description (Cont'd)

(A) Voice Grade Special Access Services (Cont'd)

(3) Voice Grade Secure Communications Type III

Approximate bandwidth 10-50,000 Hz. Furnished on four-wire metallic facilities for duplex operation for two-point secure communications between a customer designated premises and an end user's premises. Services are conditioned as follows:

G-2 Conditioning - The absolute loss with respect to frequency and the net loss variation from the customer designated premises to the end user's premises shall be the same as Voice Grade Secure Communications Type I services without additional conditioning; from the end user's premises to the customer designated premises shall be the same as Voice Grade Secure Communications Type I services with additional conditioning. Voice frequency signaling or supervisory tones can be transmitted.

(4) Voice Grade Secure Communications Type IV

Approximate bandwidth 10-50,000 Hz. Furnished on four-wire metallic facilities for duplex operation for two-point secure communication between two customer designated premises. Services are conditioned as follows:

G-3 Conditioning - The absolute loss with respect to frequency and the net loss variation shall be the same in both directions of transmission as Voice Grade Secure Communications Type I services with additional conditioning. Voice frequency signaling or supervisory tones can be transmitted.

ACCESS SERVICE

10. Special Federal Government Access Services (Cont'd)

10.5 Service Offerings to the Federal Government (Cont'd)

10.5.1 Type and Description (Cont'd)

(B) Wideband Digital Special ACCESS SERVICE

Service arrangements for secured communications to accommodate the transmission of binary digital baseband signals in a random polar format.

(1) Wideband Secure Communications Type I

For transmission at the rate of 18,750 bits per second.

(2) Wideband Secure Communications Type II

For transmission at the rate of 50,000 bits per second.

(3) Wideband Secure Communications Type III

To accommodate the transmission of restored polar two-level facsimile signals with a minimum signal element width of twenty micro- seconds at a rate of 50,000 bits per second.

To accommodate the transmission of binary digital baseband signals in a random polar format at the rate of 50,000 bits per second.

10.5.2 Mileage Application

Mileage, when used for rate application between the serving wire centers of two customer designated premises, shall be determined by the V and H Coordinates Method as set forth in NATIONAL EXCHANGE CARRIER ASSOCIATION, INC. , TARIFF F.C.C. NO. 4 and administered as set forth in 7.2.5 preceding. (T) (x)
(x)

(x) Filed under authority of Special Permission No. 93-598 of the Federal Communications Commission.

ACCESS SERVICE

10. Special Federal Government Access Services (Cont'd)

10.6 Rates and Charges

10.6.1 General

The rates and charges for special offerings to the Federal Government, such as those set forth in 10.5 preceding, are developed on an individual case basis and are set forth in 17.4.5 following. (T)

10.6.2 Voice Grade Special Access

The provision of T-3 and G conditioned services contemplates station and tandem switching operations, using customer provided equipment, as well as Special Access Service. Separate narrowband or voice grade services, where required by the customer provided equipment or switching operation, are furnished in accordance with the applicable sections of this tariff.

10.6.3 Move Charges

(A) When a service without a termination charge associated with that service, as set forth in 17.4.5 following, is moved to a different building, the nonrecurring charge applies; when moved to a new location in the same building, a charge of one-half of the nonrecurring charge applies. (T) (T) (T)

(B) When service with a termination charge associated with that service, as set forth in 17.4.5 following, is moved and reinstalled at a new location, the customer may elect: (T) (T)

- to pay the unexpired portion of the termination charge for the service, if any, with the application of a nonrecurring charge and the establishment of a new termination charge for such service at the new location, or

- to continue service subject to the unexpired portion of the termination charge, if any, and pay the estimated costs of moving such service, provided that the customer requests these charges be quoted prior to ordering the service move. Charges for moving such service will be based on estimated costs attributable to the move.

ACCESS SERVICE

10. Special Federal Government Access Services (Cont'd)

10.6 Rates and Charges (Cont'd)

10.6.3 Move Charges (Cont'd)

(B) (Cont'd)

Move charges include the estimated costs of removal, restoration of services or facilities necessitated by the move, transportation, storage, reinstallation, engineering, labor, supervision, materials, administration, and any other specific items of cost directly attributable to the move.

ACCESS SERVICE

11. Special Facilities Routing of Access Services

11.1 Description

The services provided under this tariff are provided over such routes and facilities as the Telephone Company may elect. Special Facilities Routing is involved when, in order to comply with requirements specified by the customer, the Telephone Company provides Switched Access Service, Special Access Service or Special Federal Government Access Service in a manner which includes one or more of the following conditions:

11.1.1 Diversity

Two or more circuits must be provided over not more than two different physical routes.

11.1.2 Avoidance

A circuit(s) must be provided on a route which avoids specified geographical locations.

11.1.3 Diversity and Avoidance Combined

11.1.4 Cable-Only Facilities

Certain Voice Grade services are provided on Cable-Only Facilities to meet the particular needs of a customer.

Service is provided subject to the availability of Cable- Only facilities. In the event of service failure, restoration will be made through the use of any available facilities as selected by the Telephone Company.

Avoidance and Diversity are available on Switched Access Service as set forth in Section 6 preceding; Metallic, Telegraph Grade and Voice Grade Special Access Services as set forth respectively in 7.4, 7.5 and 7.6 preceding and Special Federal Government Access Services as set forth in 10.5 preceding. Cable-Only Facilities are available for Switched Access Service as set forth in Section 6 preceding; Voice Grade Special Access Services as set forth in 7.6 preceding and Special Federal Government Access Services as set forth in 10.5 preceding.

ACCESS SERVICE

11. Special Facilities Routing of Access Services (Cont'd)

11.1 Description (Cont'd)

In order to avoid the compromise of special routing information, the Telephone Company will provide the required routing information for each specially routed service to only the ordering customer. If requested by the customer, this information will be provided when service is installed and prior to any subsequent changes in routing.

The rates and charges for Special Facilities Routing of Access Services are developed on an individual case basis. Such rates and charges for Special Facilities Routing of Access Services are as set forth in 17.4.6 following and are in addition to all other rates and charges that may be applicable for services provided under other sections of this tariff.

ACCESS SERVICE

12. Specialized Service or Arrangements (T)

12.1 General

Specialized Service or Arrangements may be provided by the Telephone Company, at the request of a customer, on an individual case basis if such service or arrangements meet the following criteria:

- The requested service or arrangements are not offered under other sections of this tariff.
- The facilities utilized to provide the requested service or arrangements are of a type normally used by the Telephone Company in furnishing its other services.
- The requested service or arrangements are provided within a LATA.
- The requested service or arrangements are compatible with other Telephone Company services, facilities, and its engineering and maintenance practices.
- This offering is subject to the availability of the necessary Telephone Company personnel and capital resources.

Rates and charges and additional regulations if applicable, for Specialized Service or Arrangements are provided on an individual case basis and are as set forth in 17.4.7 following.

ACCESS SERVICE

13. Additional Engineering, Additional Labor and Miscellaneous Services

13.1 addresses Additional Engineering. 13.2 addresses Additional Labor (which is comprised of Overtime Installation, Overtime Repair, Standby, Testing and Maintenance with Other Telephone Companies, and Other Labor). 13.3 addresses Miscellaneous Services (which are comprised of Testing Services, Maintenance of Service and Telecommunications Service Restoration Priority). 13.4 addresses Presubscription. (T)

In this section, normally scheduled working hours are an employee's scheduled work period in any given calendar day (e.g., 8:00 a.m. to 5:00 p.m.) for the application of rates based on working hours.

A Miscellaneous Service Order charge as described in 5.4.2 preceding may be applicable to services ordered from this section.

13.1 Additional Engineering

Additional Engineering, including engineering reviews as set forth in 5.4.3 preceding, will be undertaken only after the Telephone Company has notified the customer that additional engineering charges apply as set forth in 17.4.2 following, and the customer agrees to such charges.

Additional Engineering will be provided by the Telephone Company at the request of the customer only when:

(A) A customer requests additional technical information after the Telephone Company has already provided the technical information normally included on the Design Layout Report (DLR) as set forth in 6.1.5 and 7.1.6 preceding.

(B) Additional Engineering time is incurred by the Telephone Company to engineer a customer's request for a customized service as set forth in 7.1.2 preceding. (T)

(C) A customer requested Design Change requires the expenditure of Additional Engineering time. Such additional engineering time is incurred by the Telephone Company for the engineering review as set forth in 5.4.3 preceding. The charge for additional engineering time relating to the engineering review, which is undertaken to determine if a design change is indeed required, will apply whether or not the customer authorizes the Telephone Company to proceed with the Design Change. In this case the Design Change charge, as set forth in 17.4.1(B) following, does not apply unless the customer authorizes the Telephone Company to proceed with the Design Change. (T) (T)

ACCESS SERVICE

13. Additional Engineering, Additional Labor and Miscellaneous Services (Cont'd)

13.2 Additional Labor

Additional Labor is that labor requested by the customer on a given service and agreed to by the Telephone Company as set forth in 13.2.1 through 13.2.5 following. The Telephone Company will notify the customer that additional labor charges as set forth in 17.4.3 following will apply before any Additional Labor is undertaken. A call-out of a Telephone Company employee at a time not consecutive with the employee's scheduled work period is subject to a minimum charge of four hours. When provisioning or restoring Telecommunications Service Priority services, the Telephone Company will, when possible, notify the customer of the applicability of these Additional Labor charges. (T)

13.2.1 Overtime Installation

Overtime installation is that Telephone Company installation effort outside of normally scheduled working hours.

13.2.2 Overtime Repair

Overtime repair is that Telephone Company effort performed outside of normally scheduled working hours.

13.2.3 Standby (T)

Standby includes all time in excess of one-half (1/2) hour during which Telephone Company personnel standby to make installation acceptance tests or cooperative tests with a customer to verify facility repair on a given service. (T) (T)

13.2.4 Testing and Maintenance with Other Telephone Companies

Additional testing, maintenance or repair of facilities which connect other telephone companies is that which is in addition to the normal effort required to test, maintain or repair facilities provided solely by the Telephone Company.

13.2.5 Other Labor

Other labor is that additional labor not included in 13.2.1 through 13.2.4 preceding and labor incurred to accommodate a specific customer request that involves only labor which is not covered by any other section of this tariff.

ACCESS SERVICE

13. Additional Engineering, Additional Labor and Miscellaneous Services (Cont'd)

13.3 Miscellaneous Services

13.3.1 Testing Services

Testing Services offered under this section of the tariff are optional and subject to rates and charges as set forth in 17.4.4 following. A call-out of a Telephone Company employee at a time not consecutive with the employee's scheduled work period is subject to a minimum charge of four hours. Other testing services, as described in 6.2.4 and 7.1.7 preceding, are provided by the Telephone Company in association with Access Services and are furnished at no additional charge. (T)

Testing services are normally provided by Telephone Company personnel at Telephone Company locations; however, provisions are made in (B)(2) following for a customer to request Telephone Company personnel to perform Testing Services at the customer designated premises. (T) (T)

The offering of Testing Services under this section of the tariff is made subject to the availability of the necessary qualified personnel and test equipment at the various test locations mentioned in (A) and (B) following.

(A) Switched Access Service

Testing Services for Switched Access are comprised of (a) tests which are performed during the installation of a Switched Access Service, (i.e., Acceptance Tests), (b) tests which are performed after customer acceptance of such access services and which are without charge (i.e., routine testing) and (c) additional tests which are performed during or after customer acceptance of such access services and for which additional charges apply, (i.e., Additional Cooperative Acceptance Tests and in-service tests). (T) (T) (T) (T) (T)

ACCESS SERVICE

13. Additional Engineering, Additional Labor and Miscellaneous Services (Cont'd)

13.3 Miscellaneous Services (Cont'd)

13.3.1 Testing Services (Cont'd)

(A) Switched Access Service (Cont'd)

Routine tests are those tests performed by the Telephone Company on a regular basis, as set forth in 6.2.4 preceding which are required to maintain Switched Access Service. Additional in-service tests may be done on an automatic basis (no Telephone Company or customer technicians involved), on a manual basis (Telephone Company technician(s) involved at Telephone Company office(s) and Telephone Company or customer technician(s) involved at the customer designated premises).

Testing services are ordered to the Dial Tone Office for FGA, to the access tandem or end office for FGB (wherever the FGB service is ordered) and to the end office for FGs C and D. Testing Services for Directory Assistance Service not routed through an access tandem is ordered to a Directory Assistance Location for each NPA.

(1) Additional Cooperative Acceptance Testing

Additional Cooperative Acceptance Testing of Switched Access Service involves the Telephone Company provision of a technician at its office(s) and the customer provision of a technician at its premises, with suitable test equipment to perform the required tests.

Additional Cooperative Acceptance Tests may, for example, consist of the following tests:

- Impulse Noise
- Phase Jitter
- Signal to C-Notched Noise Ratio
- Intermodulation (Nonlinear) Distortion
- Frequency Shift (Offset)
- Envelope Delay Distortion
- Dial Pulse Percent Break

ACCESS SERVICE

13. Additional Engineering, Additional Labor and Miscellaneous Services (Cont'd)

13.3 Miscellaneous Services (Cont'd)

13.3.1 Testing Services (Cont'd)

(A) Switched Access Service (Cont'd)

(2) Additional Automatic Testing

Additional Automatic Testing (AAT) of Switched Access Services (Feature Groups B, C and D), is a service where the customer provides remote office test lines and 105 test lines with associated responders or their functional equivalent. The customer may order, at additional charges, gain-slope and C-notched noise testing and may order the routine tests (1004 Hz loss, C-Message Noise and Balance) on an as-needed or more than routine schedule. (T)

The Telephone Company will provide an AAT report that lists the test results for each trunk tested. Trunk test failures requiring customer participation for trouble resolution will be provided to the customer on an as- occurs basis.

The Additional Tests, (i.e., gain slope, C- notched noise, 1004 Hz loss, C-message noise and balance) may be ordered by the customer at additional charges, 60 days prior to the start of the customer prescribed schedule. The rates for Additional Automatic Tests are as set forth in 17.4.4(B) following.

ACCESS SERVICE

13. Additional Engineering, Additional Labor and Miscellaneous Services (Cont'd)

13.3 Miscellaneous Services (Cont'd)

13.3.1 Testing Services (Cont'd)

(A) Switched Access Service (Cont'd)

(3) Additional Manual Testing

Additional Manual Testing (AMT) of Switched Access Services (Feature Groups A, B, C, and D and Directory Access Service not routed through an access tandem), is a service where the Telephone Company provides a technician at its office(s) and the Telephone Company or customer provides a technician at the customer designated premises, with suitable test equipment to perform the required tests. Such additional tests will normally consist of gain-slope and C-notched noise testing. However, the Telephone Company will conduct any additional tests which the IC may request.

The Telephone Company will provide an AMT report listing the test results for each trunk tested. Trunk test failures requiring customer participation for trouble resolution will be provided to the customer on a per occurrence basis.

The Additional Manual Tests may be ordered by the customer at additional charges, 60 days prior to the start of the testing schedule as mutually agreed to by the customer and the Telephone Company.

The rates for Additional Manual Testing are as set forth in 17.4.4(C) following.

ACCESS SERVICE

13. Additional Engineering, Additional Labor and Miscellaneous Services (Cont'd)

13.3 Miscellaneous Services (Cont'd)

13.3.1 Testing Services (Cont'd)

(A) Switched Access Service (Cont'd)

(4) Obligations of the Customer

(A) The customer shall provide the Remote Office Test Line priming data to the Telephone Company, as appropriate, to support routine testing as set forth in 6.2.4(B) preceding or AAT as set forth in 13.3.1(A)(2) preceding.

(B) The customer shall make the facilities to be tested available to the Telephone Company at times mutually agreed upon.

ACCESS SERVICE

13. Additional Engineering, Additional Labor and Miscellaneous Services (Cont'd)

13.3 Miscellaneous Services (Cont'd)

13.3.1 Testing Services (Cont'd)

(B) Special Access Service

The Telephone Company will provide assistance in performing specific tests requested by the customer.

(1) Additional Cooperative Acceptance Testing

When a customer provides a technician at its premises or at an end user's premises, with suitable test equipment to perform the requested tests, the Telephone Company will provide a technician at its office for the purpose of conducting Additional Cooperative Acceptance Testing on Voice Grade Services. At the customer's request, the Telephone Company will provide a technician at the customer's premises or at the end user premises. These tests may, for example, consist of the following:

- Attenuation Distortion (i.e., frequency response)
- Intermodulation Distortion (i.e., harmonic distortion)
- Phase Jitter
- Impulse Noise
- Envelope Delay Distortion
- Echo Control
- Frequency Shift

ACCESS SERVICE

13. Additional Engineering, Additional Labor and Miscellaneous Services (Cont'd)

13.3 Miscellaneous Services (Cont'd)

13.3.1 Testing Services (Cont'd)

(B) Special Access Service (Cont'd)

(2) Additional Manual Testing

The Telephone Company will provide a technician at its premises, and the Telephone Company or customer will provide a technician at the customer's designated premises with suitable test equipment to perform the requested tests.

(3) Obligation of the Customer

When the customer subscribes to Testing Service as set forth in this section, the customer shall make the facilities to be tested available to the Telephone Company at times mutually agreed upon. (T)

ACCESS SERVICE

13. Additional Engineering, Additional Labor and Miscellaneous Services (Cont'd)

13.3 Miscellaneous Services (Cont'd)

13.3.2 Maintenance of Service

(A) When a customer reports a trouble to the Telephone Company for clearance and no trouble is found in the Telephone Company's facilities, the customer shall be responsible for payment of a Maintenance of Service charge as set forth in 17.4.4(F) following for the period of time from when Telephone Company personnel are dispatched, at the request of the customer, to the customer designated premises to when the work is completed. Failure of Telephone Company personnel to find trouble in Telephone Company facilities will result in no charge if the trouble is actually in those facilities, but not discovered at the time.

(B) The customer shall be responsible for payment of a Maintenance of Service charge when the Telephone Company dispatches personnel to the customer designated premises, and the trouble is in equipment or communications systems provided by other than the Telephone Company or in detariffed CPE provided by the Telephone Company.

In either (A) or (B) preceding, no credit allowance will be applicable for the interruption involved if the Maintenance of Service Charge applies.

13.3.3 Telecommunications Service Priority - TSP

(A) Priority installation and/or restoration of National Security Emergency Preparedness (NSEP) telecommunications services shall be provided in accordance with Part 64.401, Appendix A, of the Federal Communications Commission's (FCC's) Rules and Regulations. (x)

(x)

In addition, TSP System service shall be provided in accordance with the guidelines set forth in "Telecommunications Service Priority (TSP) System for National Security Emergency Preparedness (NSEP) Service Vendor Handbook" (NCSH 3-1-2) dated July 9, 1990, and "Telecommunications Service Priority System for National Security Emergency Preparedness Service User Manual" (NCSM 3-1-1) . (x) (x)

(x) Filed under authority of Special Permission No. 93-598 of the Federal Communications Commission.

ACCESS SERVICE

13. Additional Engineering, Additional Labor and Miscellaneous Services (Cont'd)

13.3 Miscellaneous Services (Cont'd)

13.3.3 Telecommunications Service Priority - TSP (Cont'd) (T)

The TSP System is a service, developed to meet the requirements of the Federal Government, as specified in the Service Vendor's Handbook and Service User's Manual which provides the regulatory, administrative and operational framework for the priority installation and/or restoration of NSEP telecommunications services. These include both Switched and Special Access Services. The TSP System applies only to NSEP telecommunications services, and requires and authorizes priority action by the Telephone Company providing such services. (x) (x)

For Switched Access Service, the TSP System's applicability is limited to those services which the Telephone Company can discreetly identify for priority provisioning and/or restoration.

(B) A Telecommunications Service Priority charge applies as set forth in 17.4.4 when a request to provide or change a Telecommunications Service Priority is received subsequent to the issuance of an Access Order to install the service.

Additionally, a Miscellaneous Service Order Charge as set forth in 17.4.1 will apply to Telecommunications Service Priority requests that are ordered subsequent to the initial installation of the associated access service.

A Telecommunications Service Priority charge does not apply when a Telecommunications Service Priority is discontinued or when ordered coincident with an Access Order to install or change service.

In addition, Additional Labor rates as set forth in 17.4.3 may be applicable when provisioning or restoring Switched or Special Access Services with Telecommunications Service Priority.

When the customer requests an audit or a reconciliation of the Telephone Company's Telecommunications Service Priority records, a Miscellaneous Service Order Charge as set forth in 17.4.1 (D) and Additional Labor rates as set forth in 17.4.3 are applicable.

(x) Filed under authority of Special Permission No. 93-598 of the Federal Communications Commission.

ACCESS SERVICE

13. Additional Engineering, Additional Labor and Miscellaneous Services (Cont'd)

13.3 Miscellaneous Services (Cont'd)

13.3.4 Miscellaneous Equipment

(A) Controller Arrangement

This arrangement enables the customer to control up to 48 transfer functions at a Telephone Company central office via a remote keyboard terminal capable of either 300 or 1200 bps operation. Included as part of the Controller Arrangement is a dial-up data station located at the Telephone Company Central Office to provide access to the Controller Arrangement. This dial-up data station consists of a 212A DATAPHONE data set and an appropriate Telephone Company provided channel.

The Controller Arrangement must be located in the same Telephone Company central office as the transfer functions which it controls.

Charges for the Controller Arrangement are set forth in 17.4.4(H) following.

ACCESS SERVICE

13. Additional Engineering, Additional Labor and Miscellaneous Services (Cont'd)

13.4 Presubscription

Pursuant to the Federal Communications Commission's Memorandum Opinion and Order, CC Docket No. 83-1145, Phase I, adopted May 31, 1985, and released June 12, 1985, the Allocation Plan , outlined in the Appendix B of this Order, will be available for inspection in the Public Reference Room of the Tariff Division at the Federal Communications Commission's Washington, D.C., location or may be obtained from the Commission's commercial contractor. (x) (x)

(A) Presubscription is the process by which end user customers may select and designate to the Telephone Company an IC to access, without an access code, for interLATA, interstate calls. This IC is referred to as the end user's predesignated IC.

(B) On the effective date of this tariff, all existing end users have access to interstate MTS/WATS. No later than 85 days prior to conversion to Feature Group D in a serving end office, the Telephone Company will notify end users of the availability of equal access in their particular area. The notification will include the names of all ICs wishing to participate in the presubscription process. This notification will be sent via U.S. Mail to each end user of record served by the end office to be converted.

(C) End users may select one of the following options at no charge:

- indicate a primary IC for all of its lines,
- indicate a different IC for each of its lines.

Only one IC may be selected for each line or lines terminating in the same hunt group.

End users may designate that they do not want to presubscribe to any IC. The end user must arrange this designation by directly notifying the Telephone Company's business office. This choice will require the end user to dial an access code (10XXX or 101XXXX) for all interstate calls. (C)

After the end user's initial selection of a predesignated IC or the designation that they do not want to presubscribe to any IC, for any change in selection after conversion to Equal Access in the serving end office, a nonrecurring charge, as set forth in 17.4.4(I) following applies.

(x) Filed under authority of Special Permission No. 93-598 of the Federal Communications Commission.

ACCESS SERVICE

13. Additional Engineering, Additional Labor and Miscellaneous Services (Cont'd)

13.4 Presubscription (Cont'd)

(D) End users not responding to the initial notification will be sent a second notification for the selection of a predesignated IC no earlier than 40 days prior to or no later than 90 days after the conversion to Equal Access in a serving end office. This second notification will indicate the primary IC that has been assigned to them if they fail to respond to the second notification.

After the allocation process has been completed, end users assigned to an IC via the allocation process may change their IC one time within 6 months after conversion to Equal Access in the serving end office at no charge.

Following the six month period after conversion to Equal Access for any change in selection, a nonrecurring charge as set forth in 17.4.4(I) following, applies.

(E) When an end user indicates more than one IC selection on the return notification or returns an illegible return notification, the Telephone Company will contact the end user for clarification. If the end user indicates an IC selection on the return notification that does not match with information provided by an IC and both notifications indicate the same authorization date, the end user's notification takes precedence and the Telephone Company will process the end user's selection. In the event that two or more ICs provide to the Telephone Company notifications with the same authorization date and neither notification has been processed, the Telephone Company will contact the end user for clarification. A list of these end users in conflict must be sent to the affected IC by the Telephone Company.

In the event that two or more ICs have provided to the Telephone Company notifications with the same authorization date(s), and one IC notification has already been processed by the Telephone Company, those IC notifications not yet processed would be returned to the ICs.

ACCESS SERVICE

13. Additional Engineering, Additional Labor and Miscellaneous Services (Cont'd)

13.4 Presubscription (Cont'd)

(F) New end users who are served by end offices equipped with Feature Group D will be asked to presubscribe to an IC at the time they place an order with the Telephone Company for Telephone Exchange Service. They may select either of the following options. There will be no charge for this initial selection.

- designate a primary IC for all of its lines,
- designate a different IC for each of its lines.

Only one IC may be selected for each individual line, or lines terminating in the same hunt group. Subsequent to the installation of Telephone Exchange Service and after the end user's initial selection of a predesignated IC, for any change in selection, a nonrecurring charge, as set forth in 17.4.4(I) following, applies.

(G) If the new end user fails to designate an IC as its predesignated IC prior to the date of installation of Telephone Exchange Service, the Telephone Company will (1) allocate the end user to an IC based upon current IC presubscription ratios, (2) require the end user to dial an access code (10XXX or 101XXXX) for all interstate calls, or (3) block the end user from interstate calling. The end user will be notified which option will be applied if they fail to presubscribe to an IC. An allocated or blocked end user may designate another, or initial, IC as its predesignated IC one time at no charge, if it is requested within six months after the installation of Telephone Exchange Service. (C)

For any change in selection after 6 months from the installation of Telephone Exchange Service, a nonrecurring charge, as set forth in 17.4.4(I) following applies.

ACCESS SERVICE

13. Additional Engineering, Additional Labor and Miscellaneous Services (Cont'd)

13.4 Presubscription (Cont'd)

(H) If an IC elects to discontinue its Feature Group D Service offering prior to or within 2 years of the conversion, the IC will notify the Telephone Company of the cancellation. The IC will also notify all end users which selected them that they are cancelling their service and that they should contact the Telephone Company to select a new primary IC. The IC will also inform the end user that it will pay the presubscription change charge. The cancelling IC will then be billed by the Telephone Company the appropriate charge for each end user for a period of two years from the discontinuance of Feature Group D service.

(I) If an IC elects to change or discontinue use of a Carrier Identification Code (CIC) for any reasons other than those set forth in (H) above, the IC will identify to the Telephone Company any affected end users and advise the Telephone Company of the new CIC to be assigned to these end users. If the CIC change involves a change of carrier for any end users, the IC will notify the affected end users of the change. The telephone company will change the predesignated carrier code of each end user identified by the IC to the new CIC and bill the IC the nonrecurring charge set forth in 17.4.4(I) following for each end user line or trunk that is changed.

13.5 (D)

(D)

ACCESS SERVICE

13. Additional Engineering, Additional Labor and Miscellaneous Services (Cont'd)

13.5 (D)

(D)

ACCESS SERVICE

13. Additional Engineering, Additional Labor and Miscellaneous Services (Cont'd)

13.5 (D)

(D)

13.6 Unauthorized Primary Interexchange Carrier (PIC) Change (C)

For purposes of this section, a subscriber is defined as: (N)

- the party identified in the account records of the Telephone Company as responsible for payment of the telephone bill, or
- any adult person authorized by such party to change telecommunications services or to charge services to the account, or
- any person contractually or otherwise lawfully authorized to represent such party. (N)

If an IC requests a PIC change on behalf of a subscriber and the subscriber subsequently denies requesting the change; the Telephone Company will: (C)

- Notify both carriers involved in the unauthorized change allegation made by the subscriber. This notification must include the identity of both carriers.
- Direct the subscriber to the appropriate state regulatory agency or the Federal Communications Commission to file a complaint.
- Inform the subscriber that if he or she has not already paid charges to the unauthorized carrier, he or she is not required to pay for any charges incurred for the first 30 days after the unauthorized change. (C)

13.7 (D)

(D)

ACCESS SERVICE

13. Additional Engineering, Additional Labor and Miscellaneous Services (Cont'd)

13.7

(D)

(D)

13.8 Blocking Service

13.8.1 International Blocking Service

The Telephone Company will provide International Blocking Service to customers who obtain local exchange service from the Telephone Company under its general or local exchange tariffs and to customers who obtain Feature Group A Switched Access service under this

ACCESS SERVICE

13. Additional Engineering, Additional Labor and Miscellaneous Services (Cont'd)

13.8 Blocking Service (Cont'd)

13.8.1 International Blocking Service (Cont'd)

tariff. This service is only provided at appropriately equipped Telephone Company end offices. Those offices providing International Blocking Service are identified in NATIONAL EXCHANGE CARRIER ASSOCIATION, INC. (x)
TARIFF F.C.C. NO. 4. (x)

On each line or trunk for which International Blocking Service is ordered, the Telephone Company will block all direct dialed international calls that use the call sequence of 011+ or 10XXX-011+ or 101XXX-011+. When capable, the (C)
Telephone Company will route the blocked calls to a recorded message.

An International Blocking Service charge as set forth in 17.4.4(K) following is applicable for each new or existing exchange line or trunk or Feature Group A Switched Access line to which International Blocking Service is added or removed. This charge does not apply when blocking is removed from an exchange line or trunk or Feature Group A Switched Access line at the same time that it is disconnected.

A Miscellaneous Service Order Charge as set forth in 17.4.1(D) will apply to orders adding or removing International Blocking Service that are placed subsequent to the initial installation of the associated exchange line(s) or trunk(s) or Feature Group A Switched Access line(s). This charge does not apply when blocking is removed from an exchange line or trunk or Feature Group A Switched Access line at the same time that it is disconnected.

(x) Filed under authority of Special Permission No. 93-598 of the Federal Communications Commission.

ACCESS SERVICE

13. Additional Engineering, Additional Labor and Miscellaneous Services (Cont'd)

13.8 Blocking Service (Cont'd)

13.8.2 900 Blocking Service

The Telephone Company will provide 900 Blocking Service to customers who obtain local exchange service from the Telephone Company under its general or local exchange tariffs and to customers who obtain Feature Group A Switched Access service under this tariff. This service is only provided at appropriately equipped end offices. Those offices providing 900 Blocking Service are identified in NATIONAL EXCHANGE CARRIER ASSOCIATION, INC. TARIFF F.C.C. NO. 4. (N)

On each line or trunk for which 900 Blocking Service is ordered, the Telephone Company will block all direct dialed calls placed to a 900 number. When capable, the Telephone Company will route the blocked calls to a recorded message.

A Blocking Service charge as set forth in 17.4.4(K) following is applicable when ordered by the end user customer with the following exceptions:

- Blocking access to 900 Service is offered to all subscribers at no charge from November 1, 1993 through December 31, 1993.

- Blocking access to 900 Service is offered to all subscribers at no charge at the time telephone service is established at a new number and for 60 days thereafter.

The Blocking Service charge is applied for each line, trunk, or Feature Group A Switched Access service to which 900 Blocking Service is added or removed. Requests by subscribers to remove 900 Blocking Service must be in writing. This charge does not apply when blocking is removed from an exchange line or trunk or Feature Group A Switched Access line at the same time that it is disconnected . (N)

ACCESS SERVICE

13. Additional Engineering, Additional Labor and Miscellaneous Services (Cont'd)

13.9 Billing Name and Address Service

13.9.1 General Description

(A) Billing Name and Address (BNA) Service is the provision by the Telephone Company to an interstate service provider who is a customer of the Telephone Company of the complete billing name, street address, city or town, state and zip code for a telephone number assigned by the Telephone Company. An interstate telecommunications service provider is defined as an interexchange carrier, an operator service provider, an enhanced service provider or any other provider of interstate telecommunications services. (C)

(B) BNA Service is provided only for the purposes of allowing customers to bill their end users for telephone services provided by the customer, order entry and customer service information, fraud prevention, identification of end users who have moved to a new address, any purpose associated with equal access requirements, and information associated with Local Exchange Carrier (LEC) calling card calls, collect calls and third party calls. BNA information may not be resold or used for any other purpose including, but not limited to, marketing or merchandising activities.

(C) BNA information associated with listed/published telephone numbers will be provided. Requests for BNA information associated with non-published and unlisted telephone numbers will be provided, unless the subscriber to a non-published or unlisted telephone number has affirmatively requested that its BNA not be disclosed.

ACCESS SERVICE

13. Additional Engineering, Additional Labor and Miscellaneous Services (Cont'd)

13.9 Billing Name and Address Service (Cont'd)

13.9.2 Undertaking of the Telephone Company

(A) A standard format for the receipt of BNA requests and the provision of BNA information will be established by the Telephone Company.

(B) Standard response to BNA requests will be by First Class Mail. Standard format will be on paper. (C)

(C) Where facilities are available, BNA will be provided in digitally encoded formats on digital data storage devices. Telephone Companies providing BNA in digitally encoded formats will make available one or more of the following digital data storage devices for transmission of the BNA data: magnetic tapes, compact discs (CDs), 3.5 inch floppy discs and/or Internet transmitted file. Individual Telephone Company availability of optional digital formats and transmission media are indicated in the Telephone Company's respective Section 17.4.4 rate section for BNA. (N) (N)

(D) Where facilities are available, the customer may request an optional specialized output format required to meet a specific customer need. (T)

(E) The Telephone Company will make every effort to provide accurate and complete BNA data. The Telephone Company makes no warranties, expressed or implied, as to the accuracy or completeness of this information. (T)

(F) The Telephone Company will not disclose BNA information to parties other than interstate telecommunications service providers as defined in 13.9.1(A), preceding, and their authorized billing agents. An authorized billing agent means a third party hired by a telecommunications service provider to perform billing and collection services for the telecommunications service provider. BNA disclosure is limited to those purposes as defined in 13.9.1(B), preceding. (T) (C) (C)

(G) The Telephone Company reserves the right to request from an interstate service provider who has placed an order for BNA service, the source data upon which the interstate service provider has based the order. This request is made to ensure that the BNA information is to be used only for purposes as described in 13.9.1(B), preceding. The Telephone Company will not process the order until such time as the interstate service provider supplies the requested data . (T)

ACCESS SERVICE

13. Additional Engineering, Additional Labor and Miscellaneous Services (Cont'd)

13.9 Billing Name and Address Service (Cont'd)

13.9.3 Obligations of the Customer

(A) The customer shall order BNA Service on a separate BNA Order. The order must identify both the customer's authorized representative and the address to which the information is to be sent.

(B) The customer shall treat all BNA information as confidential. The customer shall insure that BNA information is used only for the purposes as described in 13.9.1(B), preceding. (C)

(C) The customer shall not publicize or represent to others that the Telephone Company jointly participates with the customer in the development of the customer's end user records it assembles through the use of BNA Service.

(D) Upon requests, the customer will provide to the Telephone Company the source data upon which the customer has based an order from BNA service. The Telephone Company will not process the order until such time as the customer provides the requested data.

13.9.4 Rate Regulations

(A) For each order for BNA information received by the Telephone Company, a BNA Order Charge applies. In addition, a charge applies for each customer specific record provided. The BNA Order Charge and the Per Record Charge are specified in 17.4.4 following.

(B) Where available, the customer may order the response in a digitally encoded format on a digital data storage device. For each type of digital data storage device that is available from a Telephone Company, an Optional Charge is specified in the respective Telephone Company's Section 17.4.4 BNA rate section. The Optional Charge for the digital data device is in addition to the BNA Order Charge and the BNA Record Charge. (C) (C)

(C) Where available, the customer may order an output format other than a standard paper format or digital data device listed in Section 17.4.4 in order to meet a customer's specific requirement. This option is subject to an hourly programming charge as specified in 17.4.4 following and is in addition to the BNA Order Charge and the BNA Record Charge. (C)

ACCESS SERVICE

13. Additional Engineering, Additional Labor and Miscellaneous Services (Cont'd)

13.10 Originating Line Screening (OLS) Service (S) (y)

The Telephone Company will provide OLS Service to aggregators and other customers who obtain local exchange service from the Telephone Company under its general or local exchange tariff. OLS service enables customers to determine whether there are billing restrictions on exchange service lines from which a call originates. OLS service delivers codes on operator assisted calls made from aggregator locations to identify, calls originating from privately owned payphones, inmate locations, and hotels/motels, etc.

OLS Service is provided at no charge when ordered with the installation of new local exchange service. However, when an OLS code is added to an existing exchange service line, a charge is applied as set forth in 17.4.4(M). This charge is applied for each exchange service line to which an OLS code is assigned. The customer must specify the number of exchange service lines and each individual telephone number equipped.

A Miscellaneous Service Order Charge as set forth in 17.4.1(D) will apply to orders adding OLS codes that are placed subsequent to the initial installation of the associated exchange service line. This charge does not apply when OLS codes are removed from an exchange service line at the same time that the exchange service line is disconnected.

OLS codes may be delivered using Line Information Database (LIDB) or Flexible Automatic Number Identification (Flex ANI) technology. Those telephone companies delivering OLS codes using LIDB are identified in NATIONAL EXCHANGE CARRIER ASSOCIATION, INC. TARIFF F.C.C. NO. 4, as are those companies delivering OLS codes using Flex ANI.

13.11 Nonchargeable Confirmation Services

13.11.1 Billed Number Screening (BNS)

At the request of the customer, the Telephone Company business office will confirm BNS codes associated with a line to which a call is to be billed.

13.11.2 Originating Line Screening (OLS)

At the request of the customer, the Telephone Company business office will confirm OLS codes associated with an exchange service line from which a call originates. (S) (y)

(y) All material coded with an “S” was originally filed under Transmittal No. 19 on January 8, 1997 to become effective on February 22, 1997.

ACCESS SERVICE

13. Additional Engineering, Additional Labor and Miscellaneous Services (Cont'd)

13.12 Coin Supervision Additive Service

The Telephone Company will provide Coin Supervision Additive Service to Payphone Service Providers (PSPs) who order local exchange service lines for the provision of pay telephone service and where the pay telephone equipment connected to the local exchange service lines requires central office coin supervision capability. The local exchange service lines used for the provision of pay telephone service are obtained from and subject to the terms and conditions under the Telephone Company's general and/or local tariffs.

Coin Supervision Additive Service provides the capability of central office line equipment to pass signals and/or tones from an exchange service line to a trunk terminating at the PSP's operator service provider. These signals enable an operator service provider to recognize coin deposits and return coins to the pay telephone user. Coin Supervision Additive Service also permits a suitably equipped operator service provider to automatically ring back the originating exchange service line upon completion of a call.

A Coin Supervision Additive Service charge as set forth in 17.4.4(N) following is assessed monthly to the PSP for each exchange service line for which Coin Supervision Additive Service is provided.

13.13 Central Office Blocking Service (N)

Central Office Blocking With Operator Screening - Central office blocking with operator screening is offered to provide a choice of restrictions at the subscriber's option. These options will be available where line controlled public telephone service is provided on a usage rate service basis. Options are as follows:

Option 1 - Two-Way Service. Provides that third number and collect calls to Line Controlled Public Telephone Service are not allowed.

Option 2 - Two-Way Service. Provides screening information to the operator to prevent operator assisted sent-paid calls from being billed to the line. Further, third number and collect calls to Line Controlled Public Telephones are not allowed.

Option 3 - Two-Way Service. Provides central office blocking of seven digit local and 976 calls. Provides screening information to the operator to prevent operator assisted sent-paid calls from being billed to the lines. Further, third number and collect calls to Line Controlled Public Telephones are not allowed.

Option 4 - Two-Way Service. Provides central office blocking of 976 calls. Provides screening information to the operator to prevent operator-assisted sent-paid calls from being billed to the line. Further, third number and collect calls to Line Controlled Public Telephones are not allowed.

Option 5 - Two-Way Service. Provides central office blocking of sent-paid international calling upon certification by the payphone provider that the incidence of fraud in such calling is high. This service may be offered individually or in addition to either of the four options preceding. (N)

ACCESS SERVICE

13. Additional Engineering, Additional Labor and Miscellaneous Services (Cont'd)

13.14 Flexible Automatic Number Identification (Flex ANI) (N)

The Telephone Company will provide Flex ANI Service to Payphone Service Providers (PSPs) who order tariffed local exchange service lines for the provision of pay telephone service. The local exchange service lines used for the provision of pay telephone service are obtained from and subject to the terms and conditions under the Telephone Company's general and/or local tariffs.

Flex ANI is a Common Switching Optional Feature that enhances the existing Automatic Number Identification (ANI) optional feature (described in 6.9.1 (F) preceding) by allowing FGD customers to receive additional information digits. Flex ANI provides additional information digits (described in 6.9.1 (AA) preceding). Flex ANI is available in suitably equipped end offices.

A monthly recurring charge, as set forth in 17.4.4(O) following, is associated with Flex ANI service. A Miscellaneous Service Order Charge as set forth in 17.4.1(D) will apply to orders for Flex ANI service placed subsequent to the initial installation of the associated exchange service line. (N)

ACCESS SERVICE

14. Reserved for Future Use

ACCESS SERVICE

15. Access Service Interfaces and Transmission Specifications

15.1 contains Switched Access Service Options (which are comprised of Interface Groups, Supervisory Signaling, Entry Switch Receive Level and Local Transport Termination) and Transmission Specifications. 15.2 describes Special Access Service Network Channel (NC) codes and Network Channel Interface (NCI) codes. 15.3 contains Interface Group, Premises Interface Code and Standard Transmission Specifications applicable to Directory Access Service.

15.1 Switched Access Service

Ten Interface Groups are provided for terminating the Local Transport Entrance Facility at the customer's designated premises. Each Interface Group provides a specified premises interface (e.g., two-wire, four-wire, DS1, etc.). Where transmission facilities permit, and at the option of the customer, the Entrance Facility may be provided with optional features as set forth in 15.1.1 following. (C)

As a result of the customer's access order and the type of Telephone Company transport facilities serving the customer designated premises, the need for signaling conversions or two-wire to four- wire conversions, or the need to terminate digital or high frequency facilities in channel bank equipment may require that Telephone Company equipment be placed at the customer designated premises. For example, if a voice frequency interface is ordered by the customer and the Telephone Company facilities serving the customer designated premises are digital, then Telephone Company channel bank equipment must be placed at the customer designated premises in order to provide the voice frequency interface ordered by the customer.

15.1.1 Local Transport Interface Groups

Interface Groups are combinations of technical parameters which describe the Telephone Company handoff at the point of termination at the customer designated premises. The technical specifications concerning the available interface groups are set forth in (A) through (D) following.

ACCESS SERVICE

15. Access Service Interfaces and Transmission Specifications (Cont'd)

15.1 Switched Access Service (Cont'd)

15.1.1 Local Transport Interface Groups (Cont'd)

Interface Group 1 is provided with Type C Transmission Specifications, as set forth in 15.1.2(C) following, and Interface Groups 2 through 10 are provided with Type A or B Transmission Specifications, as set forth respectively in 15.1.2(E) and (F) following, depending on the Feature Group and whether the Access Service is routed directly or through an access tandem. All Interface Groups are provided with Data Transmission Parameters.

Only certain premises interfaces are available at the customer designated premises. The premises interfaces associated with the Interface Groups may vary among Feature Groups.

(A) Interface Group 1

Interface Group 1, except as set forth in the following, provides two-wire voice frequency transmission at the point of termination at the customer designated premises. The interface is capable of transmission of voice and associated telephone signals within the frequency bandwidth of approximately 300 to 3000 Hz.

Interface Group 1 is not provided in association with FGC and FGD when the first point of switching is an access tandem. In addition, Interface Group 1 is not provided in association with FGB, FGC or FGD when the first point of switching provides only four-wire terminations.

ACCESS SERVICE

15. Access Service Interfaces and Transmission Specifications (Cont'd)

15.1 Switched Access Service (Cont'd)

15.1.1 Local Transport Interface Groups (Cont'd)

(A) Interface Group 1 (Cont'd)

The transmission path between the point of termination at the customer designated premises and the customer's serving wire center point of (C)switching may be comprised of any form or configuration of plant capable of and typically used in the telecommunications industry for the transmission of voice and associated telephone signals within the frequency bandwidth of 300 to 3000 Hz.

The interface is provided with loop supervisory signaling. When the interface is associated with FGA, such signaling will be loop start or ground start signaling. When the interface is associated with FGB, FGC or FGD, such signaling, except for two-way calling which is E&M signaling, will be reverse battery signaling.

(B) Interface Group 2

Interface Group 2 provides four-wire voice frequency transmission at the point of termination at the customer designated premises. The interface is capable of transmission of voice and associated telephone signals within the frequency bandwidth of approximately 300 to 3000 Hz.

The transmission path between the point of termination at the customer (C)
designated premises and the customer's serving wire center may be (C)
comprised of any form or configuration of plant capable of and typically used in the telecommunications industry for the transmission of voice and associated telephone signals within the frequency bandwidth of approximately 300 to 3000 Hz.

ACCESS SERVICE

15. Access Service Interfaces and Transmission Specifications (Cont'd)

15.1 Switched Access Service (Cont'd)

15.1.1 Local Transport Interface Groups (Cont'd)

(B) Interface Group 2 (Cont'd)

The interface is provided with loop supervisory signaling. When the interface is associated with FGA, such signaling will be loop start or ground start signaling. When the interface is associated with FGB, FGC or FGD, such signaling, except for two-way calling which is E&M signaling, will be reverse battery signaling.

(C) Interface Groups 3 through 5

Interface Groups 3 through 5 provide analog transmission at the point of termination at the customer designated premises. The various interfaces are capable of transmitting electrical signals at the frequencies illustrated following, with the capability to channelize voice frequency transmission paths. Certain frequencies within the bandwidth of the Interface Groups are reserved for Telephone Company use, e.g., pilot and carrier group alarm tones. Before the first point of switching, the Telephone Company will provide multiplex equipment to derive the transmission paths of frequency bandwidth of approximately 300 to 3000 Hz.

The interfaces are provided with individual transmission path SF supervisory signaling.

Interface Group Identification No.	Transmission Frequency Bandwidth	Analog Hierarchy Level	Maximum No. Of Channelized Voice Freg. Trans. Paths
3	60-108kHz	Group	12
4	312-552 kHz	Supergroup	60
5	564-3084 kHz	Mastergroup	600

ACCESS SERVICE

15. Access Service Interfaces and Transmission Specifications (Cont'd)

15.1 Switched Access Service (Cont'd)

15.1.1 Local Transport Interface Groups (Cont'd)

(D) Interface Groups 6 through 10

Interface Groups 6 through 10 provide digital transmission at the point of termination at the customer designated premises. The various interfaces are capable of transmitting electrical signals at the nominal bit rates illustrated following, with the capability to channelize voice frequency transmission paths. Before the first point of switching, when analog switching utilizing analog terminations is provided, the Telephone Company will provide multiplex and channel bank equipment to derive transmission paths of a frequency bandwidth of approximately 300 to 3000 Hz. When digital switching or analog switching with digital carrier terminations is provided, the Telephone Company will provide a DS1 (C)
signal(s) in D3/D4 format . (C)

The interfaces are provided with individual transmission path bit stream supervisory signaling.

Interface Group Identification No.	Nominal Bit Rate (Mbps)	Digital Hierarchy Level	Max. No. of Channnelized Voice Freq. Trans. Paths
6	1.544	DS1	24
7	3.152	DS1C	48
8	6.312	DS2	96
9	44.736	DS3	672
10	274.176	DS4	4032

ACCESS SERVICE

15. Access Service Interfaces and Transmission Specifications (Cont'd)

15.1 Switched Access Service (Cont'd)

15.1.1 Local Transport Interface Groups (Cont'd)

(E) Local Transport Optional Features

Where transmission facilities permit, the Telephone Company will, at the option of the customer, provide the following features in association with Local Transport. An Access Order Charge as specified in 17.4.1(A) following is applicable on a per order basis when nonchargeable optional features are added subsequent to the installation of service.

- Customer Specified Entry Switch Receive Level

  Customer Specified Entry Switch Receive Level allows the customer to specify the receive transmission level at the first point of switching. The range of transmission levels which may be specified is described in Technical Reference TR-NPL-000334. This feature is available with Interface Groups 2 through 10 for Feature Groups A and B. (x)

- Customer Specification of Local Transport Termination

  Customer Specification of Local Transport Termination allows the customer to specify, for Feature Group B routed directly to an end office or access tandem, a four-wire termination of the Local Transport at the first point of switching in lieu of a Telephone Company selected two-wire termination. This option is available only when the Feature Group B arrangement is provided with Type B Transmission Specifications.

- Supervisory Signaling

  Supervisory Signaling allows the customer to order an optional supervisory signaling arrangement for each transmission path provided where the transmission parameters permit, and where signaling conversion is required by the customer to meet its signaling capability.

(x) Filed under authority of Special Permission No. 93-598 of the Federal Communications Commission.

ACCESS SERVICE

15. Access Service Interfaces and Transmission Specifications (Cont'd)

15.1 Switched Access Service (Cont'd)

15.1.1 Local Transport Interface Groups (Cont'd)

(E) Local Transport Optional Features (Cont'd)

The Interface Groups, as described in (A) through (D) preceding, represent industry standard arrangements. Where transmission parameters permit, the customer may select the following optional signaling arrangements in place of the signaling arrangements standardly associated with the Interface Groups.

- For Interface Groups 1 and 2 associated with FGB, FGC or FGD

  DX Supervisory Signaling,
  E&M Type I Supervisory Signaling,
  E&M Type II Supervisory Signaling, or
  E&M Type III Supervisory Signaling

- For Interface Group 2 associated with FGB, FGC or FGD and in addition to the preceding

  SF Supervisory Signaling, or
  Tandem Supervisory Signaling

- For Interface Groups 3 through 5

  Optional Supervisory Signaling Not Available

- For Interface Groups 6 through 10

These Interface Groups may, at the option of the customer, be provided with individual transmission path SF supervisory signaling where such signaling is available in Telephone Company central offices. Generally such signaling is available only where the first point of switching provides an analog (i.e., non-digital) interface to the transport termination. (T)

These optional Supervisory Signaling arrangements are not available in combination with the SS7 optional feature as described in 6.8.2 (C)(2) preceding. (T)

Additionally, in (F) following, there is a matrix of available Premises Interface Codes as a function of Interface Group, Telephone Company Switch Supervisory Signaling and Feature Group.

ACCESS SERVICE

15. Access Service Interfaces and Transmission Specifications (Cont'd)

15.1 Switched Access Service (Cont'd)

15.1.1 Local Transport Interface Groups (Cont'd)

(F) Available Premises Interface Codes

Following is a matrix showing premises interface codes which are available for each Interface Group. Their availability is a function of the Telephone Company switch supervisory signaling and Feature Group. For explanations of these codes, see the Parameter Codes and Options as set forth in 15.2.2(A) following.

Interface Group	Telephone Company Switch Supervisory Signaling	Premises Interface Code	Feature Group A	B	C	D	
1	LO	2LS2	X				
	LO	2LS3	X				
	GO	2GS2	X				
	GO	2GS3	X				
	LO, GO	2DX3	X				(T)
	LO, GO	4EA3-E	X				(T)
	LO, GO	4EA3-M	X				
	LO, GO	6EB3-E	X				
	LO, GO	6EB3-M	X				
	RV, EA, EB, EC	2DX3		X	X	X	
	RV, EA, EB, EC	4EA3-E		X	X	X	
	RV, EA, EB, EC	4EA3-M		X	X	X	
	RV, EA, EB, EC	6EB3-E		X	X	X	
	RV, EA, EB, EC	6EB3-M		X	X	X	
	EA, EB, EC	6EC3			X	X	
	RV	2RV3-0		X	X	X	
	RV	2RV3-T		X	X	X	
	SS7	2NO2			X	X	
2	LO, GO	4SF2	X				
	LO, GO	4SF3	X				
	LO	4LS2	X				
	LO	4LS3	X				
	LO	6LS2	X				

ACCESS SERVICE

15. Access Service Interfaces and Transmission Specifications (Cont'd)

15.1 Switched Access Service (Cont'd)

15.1.1 Local Transport Interface Groups (Cont'd)

(F) Available Premises Interface Codes (Cont'd)

Interface Group	Telephone Company Switch Supervisory Signaling	Premises Interface Code	Feature Group A	B	C	D
2 (Cont'd)	GO	4GS2	X			
	GO	4GS3	X			
	GO	6GS2	X			
	LO,GO	4DX2	X			
	LO,GO	4DX3	X			
	LO,GO	6EA2-E	X			
	LO,GO	6EA2-M	X			
	LO,GO	8EB2-E	X			
	LO,GO	8EB2-M	X			
	LO,GO	6EX2-B	X			
	RV,EA,EB,EC	4SF2		X	X	X
	RV,EA,EB,EC	4SF3		X		
	RV,EA,EB,EC	4DX2		X	X	X
	RV,EA,EB,EC	4DX3		X		
	RV,EA,EB,EC	6DX2			X	
	RV,EA,EB,EC	6EA2-E		X	X	X
	RV,EA,EB,EC	6EA2-M		X	X	X
	RV,EA,EB,EC	8EB2-E		X	X	X
	RV,EA,EB,EC	8EB2-M		X	X	X
	EA,EB,EC	8EC2-M			X	X
	RV	4RV2-O		X	X	X
	RV	4RV2-T		X	X	X
	RV	4RV3-O		X	X	
	RV	4RV3-T		X	X	
	SS7	4NO2			X	X
3	LO,GO	4AH5-B	X			
	RV,EA,EB,EC	4AH5-B		X	X	X
	SS7	4AH5-B			X	X
4	LO,GO	4AH6-C	X			
	RV,EA,EB,EC	4AH6-C		X	X	X
	SS7	4AH6-C			X	X
5	LO,GO	4AH6-D	X			
	RV,EA,EB,EC	4AH6-D		X	X	X
	SS7	4AH6-D			X	X

ACCESS SERVICE

15. Access Service Interfaces and Transmission Specifications (Cont'd)

15.1 Switched Access Service (Cont'd)

15.1.1 Local Transport Interface Groups (Cont'd)

(F) Available Premises Interface Codes (Cont'd)

Interface Group	Telephone Company Switch Supervisory Signaling	Premises Interface Code	Feature Group A	B	C	D
6	LO, GO	4DS9-15	X			
	LO, GO	4DS9-15L	X			
	RV, EA, EB, EC	4DS9-15		X	X	X
	RV, EA, EB, EC	4DS9-15L		X	X	X
	SS7	4DS9-15			X	X
7	LO, GO	4DS9-31	X			
	LO, GO	4DS9-31L	X			
	RV, EA, EB, EC	4DS9-31		X	X	X
	RV, EA, EB, EC	4DS9-31L		X	X	X
	SS7	4DS9-31			X	X
8	LO, GO	4DS0-63	X			
	LO, GO	4DS0-63L	X			
	RV, EA, EB, EC	4DS0-63		X	X	X
	RV, EA, EB, EC	4DS0-63L		X	X	X
	SS7	4DS0-63			X	X
9	LO, GO	4DS6-44	X			
	LO, GO	4DS6-44L	X			
	RV, EA, EB, EC	4DS6-44		X	X	X
	RV, EA, EB, EC	4DS6-44L		X	X	X
	SS7	4DS6-44			X	X
10	LO, GO	4DS6-27	X			
	LO, GO	4DS6-27L	X			
	RV, EA, EB, EC	4DS6-27		X	X	X
	RV, EA, EB, EC	4DS6-27L		X	X	X
	SS7	4DS6-27			X	X

ACCESS SERVICE

15. Access Service Interfaces and Transmission Specifications (Cont'd)

15.1 Switched Access Service (Cont'd)

15.1.2 Standard Transmission Specifications

Descriptions of the transmission specifications available with each Feature Group as a function of the Interface Group selected by the customer, are set forth in (A) through (D) following. Descriptions of each of the these Standard Transmission Specifications and the two Data Transmission Parameters mentioned are set forth respectively in (E) through (G) and 15.1.3(A) and (B) following:

(A) Feature Group A

FGA is provided with either Type B or Type C Transmission Specifications. The specifications for the associated parameters are guaranteed to the first point of switching. Type C Transmission Specifications are provided with Interface Group 1 and Type B is provided with Interface Groups 2 through 10. Type DB Data Transmission Parameters are provided with FGA to the first point of switching.

(B) Feature Group B

FGB is provided with either Type B or Type C Transmission Specifications. The specifications for the associated parameters are guaranteed to the end office when routed directly or to the first point of switching when routed via an access tandem. Type C Transmission Specifications are provided with Interface Group 1 and Type B is provided with Interface Groups 2 through 10. Type DB Data Transmission Parameters are provided with FGB to the first point of switching.

ACCESS SERVICE

15. Access Service Interfaces and Transmission Specifications (Cont'd)

15.1 Switched Access Service (Cont'd)

15.1.2 Standard Transmission Specifications (Cont'd)

(C) Feature Group C

FGC is provided with either Type B or Type C Transmission Specifications as follows:

- When routed directly to the end office either Type B or Type C is provided.

- When routed to an access tandem only Type B is provided.

- Type B or Type C is provided on the transmission path from the access tandem to the end office.

Type C Transmission Specifications are provided with Interface Group 1 when routed directly to an end office. Type B is provided with Interface Groups 2 through 10, whether routed directly to an end office or to an access tandem.

Type DB Data Transmission Parameters are provided with FGC for the transmission path between the customer designated premises and the end office when directly routed to the end office, and between the customer designated premises and the access tandem and between the access tandem and the end office when routed via an access tandem.

ACCESS SERVICE

15. Access Service Interfaces and Transmission Specifications (Cont'd)

15.1 Switched Access Service (Cont'd)

15.1.2 Standard Transmission Specifications (Cont'd)

(D) Feature Group D

FGD is provided with either Type A, Type B or Type C Transmission Specifications as follows:

- When routed to the end office either Type B or C is provided.
- When routed to an access tandem only Type A is provided.
- Type A is provided on the transmission path from the access tandem to the end office.

Type C Transmission Specifications are provided with Interface Group 1. Type A and Type B Transmission Specifications are provided with Interface Groups 2 through 10.

Type DB Data Transmission Parameters are provided with FGD for the transmission path between the customer designated premises and the end office when directly routed to the end office. Type DA Data Transmission Parameters are provided for the transmission path between the customer designated premises and the access tandem and between the access tandem and the end office when routed via an access tandem.

(E) Type A Transmission Specifications

Type A Transmission Specifications is provided with the following parameters:

(1) Loss Deviation

The maximum Loss Deviation of the 1004 Hz loss relative to the Expected Measured Loss (EML) is ± 2.0 dB

ACCESS SERVICE

15. Access Service Interfaces and Transmission Specifications (Cont'd)

15.1 Switched Access Service (Cont'd)

15.1.2 Standard Transmission Specifications (Cont'd)

(E) Type A Transmission Specifications (Cont'd)

(2) Attenuation Distortion

The maximum Attenuation Distortion in the 404 to 2804 Hz frequency band relative to the loss at 1004 Hz is -1.0 dB to +3.0 dB.

(3) C-Message Noise

The maximum C-Message Noise for the transmission path at the route miles listed is less than or equal to:

Route Miles	C-Message Noise
less than 50	32 dBrnCO
51 to 100	34 dBrnCO
101 to 200	37 dBrnCO
201 to 400	40 dBrnCO
401 to 1000	42 dBrnCO

(4) C-Notch Noise

The maximum C-Notch Noise, utilizing a -16 dBmO holding tone, is less than or equal to 45 dBrnCO.

ACCESS SERVICE

15. Access Service Interfaces and Transmission Specifications (Cont'd)

15.1 Switched Access Service (Cont'd)

15.1.2 Standard Transmission Specifications (Cont'd)

(E) Type A Transmission Specifications (Cont'd)

(5) Echo Control

Echo Control, identified as Equal Level Echo Path Loss, and expressed as Echo Return Loss and Singing Return Loss, is dependent on the routing, i.e., whether the service is routed directly from the customer's point of termination (POT) to the end office or via an access tandem. It is equal to or greater than the following:

	Echo Return Loss	Singing Return Loss
POT to Access Tandem	21 dB	14 dB
POT to End Office		
- Direct	N/A	N/A
- Via Access Tandem	16 dB	11 dB

(6) Standard Return Loss

Standard Return Loss expressed as Echo Return Loss and Singing Return Loss on two-wire ports of a four-wire point of termination shall be equal to or greater than:

Echo Return Loss	Singing Return Loss
5 dB	2.5 dB

ACCESS SERVICE

15. Access Service Interfaces and Transmission Specifications (Cont'd)

15.1 Switched Access Service (Cont'd)

15.1.2 Standard Transmission Specifications (Cont'd)

(F) Type B Transmission Specifications

Type B Transmission Specifications are provided with the following parameters:

(1) Loss Deviation

The maximum Loss Deviation of the 1004 Hz loss relative to the Expected Measured Loss (EML) is ± 2.5 dB.

(2) Attenuation Distortion

The maximum Attenuation Distortion in the 404 to 2804 Hz frequency band relative to loss at 1004 Hz is -2.0 dB to +4.0 dB.

(3) C-Message Noise

The maximum C-Message Noise for the transmission path at the route miles listed is less than or equal to:

	C-Message Noise*	
Route Miles	Type B1	Type B2
less than 50	32 dBrnCO	35 dBrnCO
51 to 100	33 dBrnCO	37 dBrnCO
101 to 200	35 dBrnCO	40 dBrnCO
201 to 400	37 dBrnCO	43 dBrnCO
401 to 1000	39 dBrnCO	45 dBrnCO

(4) C-Notch Noise

The maximum C-Notch Noise, utilizing a -16 dBm0 holding tone is less than or equal to 47 dBrnCO.

* For Feature Groups C and D only Type B2 will be provided. For FeatureGroups A and B, Type B1 or B2 will be provided as set forth in Technical Reference TR-NPL-000334. (x) (x)

(x) Filed under authority of Special Permission No. 93-598 of the Federal Communications Commission.

ACCESS SERVICE

15. Access Service Interfaces and Transmission Specifications (Cont'd)

15.1 Switched Access Service (Cont'd)

15.1.2 Standard Transmission Specifications (Cont'd)

(F) Type B Transmission Specifications (Cont'd)

(5) Echo Control

Echo Control, identified as Impedance Balance for FGA and FGB and Equal Level Echo Path Loss for FGC and FGD, and expressed as Echo Return Loss (ERL) and Singing Return Loss (SRL), is dependent on the routing, i.e., whether the service is routed directly from the customer's point of termination (POT) to the end office or via an access tandem. The ERL and SRL also differ by Feature Group, type of termination, and type of transmission path. They are greater than or equal to the following:

	Echo Return Loss	Singing Return Loss
POT to Access Tandem		
- Terminated in 4-Wire trunk	21 dB	14 dB
- Terminated in 2-Wire trunk	16 dB	11 dB
POT to End Office		
- Direct	16 dB	11 dB
- Via Access Tandem		
. For FGB access	8 dB	4 dB
. For FGC access (Effective 4-Wire transmission path at end office)	16 dB	11 dB
. For FGC access (Effective 2-Wire transmission path at end office)	13 dB	6 dB

ACCESS SERVICE

15. Access Service Interfaces and Transmission Specifications (Cont'd)

15.1 Switched Access Service (Cont'd)

15.1.2 Standard Transmission Specifications (Cont'd)

(F) Type B Transmission Specifications (Cont'd)

(6) Standard Return Loss

Standard Return Loss, expressed as Echo Return Loss and Singing Return Loss, on two-wire ports of a four-wire point of termination shall be equal to or greater than:

Echo Return Loss	Singing Return Loss
5 dB	2.5 dB

(G) Type C Transmission Specifications

Type C Transmission Specifications are provided with the following parameters:

(1) Loss Deviation

The maximum Loss Deviation of the 1004 Hz loss relative to the Expected Measured Loss (EML) is ± 3.0 dB.

(2) Attenuation Distortion

The maximum Attenuation Distortion in the 404 to 2804 Hz frequency band relative to loss at 1004 Hz is -2.0 dB to +5.5 dB.

ACCESS SERVICE

15. Access Service Interfaces and Transmission Specifications (Cont'd)

15.1 Switched Access Service (Cont'd)

15.1.2 Standard Transmission Specifications (Cont'd)

(G) Type C Transmission Specifications (Cont'd)

(3) C-Message Noise

The maximum C-Message Noise for the transmission path at the route miles listed is less than or equal to:

	C-Message Noise*	
Route Miles	Type C1	Type C2
less than 50	32 dBrnCO	38 dBrnCO
51 to 100	33 dBrnCO	39 dBrnCO
101 to 200	35 dBrnCO	41 dBrnCO
201 to 400	37 dBrnCO	43 dBrnCO
401 to 1000	39 dBrnCO	45 dBrnCO

(4) C-Notch Noise

The maximum C-Notch Noise, utilizing a -16 dBm0 holding tone is less than or equal to 47 dBrnCO.

* For Feature Groups C and D only Type C2 will be provided. For Feature Groups A and B, Type C1 or C2 will be provided as set forth in Technical Reference TR-NPL-000334. (x) (x)

(x) Filed under authority of Special Permission No. 93-598 of the Federal Communications Commission.

ACCESS SERVICE

15. Access Service Interfaces and Transmission Specifications (Cont'd)

15.1 Switched Access Service (Cont'd)

15.1.2 Standard Transmission Specifications (Cont'd)

(G) Type C Transmission Specifications (Cont'd)

(5) Echo Control

Echo Control, identified as Return Loss and expressed as Echo Return Loss and Singing Return Loss is dependent on the routing, i.e., whether the service is routed directly from the customer's point of termination (POT) to the end office or via an access tandem. It is equal to or greater than the following:

	Echo Return Loss	Singing Return Loss
POT to Access Tandem	13 dB	6 dB
POT to End Office		
- Direct	13 dB	6 dB
- Via Access Tandem	8 dB (for FGB only)	4 dB

15.1.3 Data Transmission Parameters

Two types of Data Transmission Parameters, i.e., Type DA and Type DB, are provided for the Feature Group arrangements. Type DB is provided with Feature Groups A, B and C and also with Feature Group D when Feature Group D is directly routed to the end office. Type DA is only provided with Feature Group D and only when routed via an access tandem. Following are descriptions of each.

(A) Data Transmission Parameters Type DA

(1) Signal to C-Notched Noise Ratio

The Signal to C-Notched Noise Ratio is equal to or greater than 33 dB.

ACCESS SERVICE

15. Access Service Interfaces and Transmission Specifications (Cont'd)

15.1 Switched Access Service (Cont'd)

15.1.3 Data Transmission Parameters (Cont'd)

(A) Data Transmission Parameters Type DA (Cont'd)

(2) Envelope Delay Distortion

The maximum Envelope Delay Distortion for the frequency bands and route miles specified is:

604 to 2804 Hz

less than 50 route miles	500 microseconds
equal to or greater than 50 route miles	900 microseconds

1004 to 2404 Hz

less than 50 route miles	200 microseconds
equal to or greater than 50 route miles	400 microseconds

(3) Impulse Noise Counts

The Impulse Noise Counts exceeding a 65 dBrnCO threshold in 15 minutes is no more than 15 counts.

(4) Intermodulation Distortion

The Second Order (R2) and Third Order (R3) Intermodulation Distortion products are equal to or greater than:

Second Order (R2)	33 dB
Third Order (R3)	37 dB

ACCESS SERVICE

15. Access Service Interfaces and Transmission Specifications (Cont'd)

15.1 Switched Access Service (Cont'd)

15.1.3 Data Transmission Parameters (Cont'd)

(A) Data Transmission Parameters Type DA (Cont'd)

(5) Phase Jitter

The Phase Jitter over the 4-300 Hz frequency band is less than or equal to 5 peak-to-peak.

(6) Frequency Shift

The maximum Frequency Shift does not exceed -2 to +2 Hz.

(B) Data Transmission Parameters Type DB

(1) Signal to C-Notched Noise Ratio

The Signal to C-Notched Noise Ratio is equal to or greater than 30 dB. (T)

(2) Envelope Delay Distortion

The maximum Envelope Delay Distortion for the frequency bands and route miles specified is:

604 to 2804 Hz

less than 50 route miles	800 microseconds
equal to or greater than 50 route miles	1000 microseconds

1004 to 2404 Hz

less than 50 route miles	320 microseconds
equal to or greater than 50 route miles	500 microseconds

ACCESS SERVICE

15. Access Service Interfaces and Transmission Specifications (Cont'd)

15.1 Switched Access Service (Cont'd)

15.1.3 Data Transmission Parameters (Cont'd)

(B) Data Transmission Parameters Type DB (Cont'd)

(3) Impulse Noise Counts

The Impulse Noise Counts exceeding a 67 dBrnCO threshold in 15 minutes is no more than 15 counts.

(4) Intermodulation Distortion

The Second Order (R2) and Third Order (R3) Intermodulation Distortion products are equal to or greater than:

Second Order (R2)	31 dB
Third Order (R3)	34 dB

(5) Phase Jitter

The Phase Jitter over the 4-300 Hz frequency band is less than or equal to 7° peak-to-peak.

(6) Frequency Shift

The maximum Frequency Shift does not exceed -2 to +2 Hz.

ACCESS SERVICE

15. Access Service Interfaces and Transmission Specifications (Cont'd)

15.2 Special Access Service

This section explains and lists the codes that the customer must specify when ordering Special Access Service. Switched Access, Entrance Facilities, and Voice Grade and High Capacity Direct Trunked Transport. These codes provide a standardized means to relate the services being ordered to Special Access Service offerings contained in Section 7 preceding. (C) (C)

When ordering, the type of Special Access Service or Switched Access Entrance Facility or Direct Trunked Transport is described by two code sets, the Network Channel (NC) code and the Network Channel Interface (NCI) codes. (C) (C)

The Network Channel (NC) code consists of two elements. Element one is a Channel Service Code (character positions 1 and 2) that describes the channel service type in an abbreviated form. Element two is an Optional Feature Code (character positions 3 and 4) that identifies option codes available for each channel service code, such as C-conditioning or Improved Return Loss.

The Network Channel Interface (NCI) is used to identify interface specifications associated with a particular channel. This code describes the total wires, protocol, impedance, protocol options and transmission level point(s) reflecting physical and electrical characteristics between the Telephone Company and the customer.

On the following 3 pages are examples which explain the specific characters of the codes and which reference matrices and charts used in developing the codes. Included in the matrices are Service Designator (SD) codes which are used to identify variations of service within service types (e.g., TG1 = Telegraph). The SD and NC codes are displayed as components of the matrices designated as Technical Specifications packages in (A) through (G) following. Through the use of these matrices, SD codes may be converted to NC codes for service ordering purposes.

A chart is also provided in 15.2.2(A) following which contains information necessary to develop NCI codes.

ACCESS SERVICE

15. Access Service Interfaces and Transmission Specifications (Cont'd)

15.2 Special Access Service (Cont'd)

Comprehensive lists of allowed Network Channel (NC) and Network Channel Interface (x)
(NCI) codes are contained in Special Report (x) SR-STS-000307. However, not all (C) (x)
services contained in this Special (x) Report may be offered by the Telephone Company at this time.

Lastly, 15.2.2(C) following provides a list of compatible Network Channel Interfaces inasmuch as the Network Channel Interfaces associated with a given service need not always be the same, but all must be compatible.

Example No. 1: If the customer wishes to order a 4-wire voice grade circuit with 600 Ohms impedance, capable of data transmission, and with improved return loss, the customer might specify the following:

NC	NCI	SECNCI
LG-R	04DB2	04DA2-S

NC Code:
LG = Voice Grade Channel Service, VG6
-R = Improved Return Loss

NCI Code:
04 = Number of physical wires at CDP
DB = Data stream in VF frequency band at the customer designated main terminal location
2 = 600 Ohms impedance

SECNCI (Secondary NCI Code):
04 = Number of physical wires at CDP
DA = Data stream in VG frequency at the customer designated secondary terminal location
2 = 600 Ohms impedance
S = Sealing current option for 4-wire transmission

In the above example the NCI (Network Channel Interface) code is the interface requested at the customer's POT (Point of Termination) and the SECNCI (Secondary Network Channel Interface) code represents the interface at the end office serving the End User.

(x) Filed under authority of Special Permission No. 93-598 of the Federal Communications Commission.

ACCESS SERVICE

15. Access Service Interfaces and Transmission Specifications (Cont'd)

15.2 Special Access Service (Cont'd)

Example No. 2: If the customer wishes to order a FX circuit to a station, with 600 Ohms impedance, loop start signaling, which is 4-wire at the CDP and 2-wire at the end-user, the customer might specify:

NC	NCI	SECNCI
LC--	04LO2	02LS2

NC Code:
LC = Voice Grade Channel Service, VG2
-- = No Optional Features

NCI Code:
04 = Number of physical wires at CDP
LO = Loop start, loop signaling - open end
2 = 600 Ohms impedance

SECNCI (Secondary NCI Code):
02 = Number of physical wires at CDP
LS = Loop start signaling - closed end
2 = 600 Ohms impedance

Example No. 3: If the customer wishes to order a 1.544 Mbps Hi-cap facility with no channel options such as CO multiplexing, the customer might specify the following:

NC	NCI	SECNCI
HC--	04DS9-15	04DS9-15

NC Code:
HC = High Capacity Channel Service, HC1
-- = No Optional Features

NCI, SECNCI Code:
04 = Number of physical wires at CDP
DS = Digital hierarchy interface
9 = 100 Ohms impedance
15 = 1.544 Mbps (DS1) format

The preceding three examples use information contained in Special Report SR-STS-000307. (C) (x)

(x) Filed under authority of Special Permission No. 93-598 of the Federal Communications Commission.

ACCESS SERVICE

15. Access Service Interfaces and Transmission Specifications (Cont'd)

15.2 Special Access Service (Cont'd)

15.2.1 Network Channel (NC) Codes

In order to determine the NC code appropriate for the service to be ordered, the type of Special Access Service the customer wishes must be identified. This identification is accomplished by a Service Designator (SD) code. The broad categories of Service Designator codes (e.g., VG, MT, TG, etc.) are set forth in Section 7 preceding. Variations within service type (e.g., VG1, MTC, TG2, etc.) are described in the various Technical Publications cited in (A) through (G) following.

Having determined the specific service type to be ordered and its SD code, and having used the appropriate Technical Publication, the customer should match the SD code to the NC code using the following matrices. Once the NC code has been determined , the Network Channel Interface (NCI) code may be developed using the information set forth in 15.2.2 following and the guidelines concerning specific parameters available for each service type as set forth in the specified Technical Publication. (T)

(A) Technical Specifications Packages Metallic Service

	Package			
SD Code	MTC*	MT1	MT2	MT3
NC Code	MQ	NT	NU	NV
Parameter				
DC Resistance Between Conductors	X	X	X	
Loop Resistance	X			X
Shunt Capacitance	X			X
Optional Features and Functions				
Three Premises Bridging	X	X		X
Series Bridging	X		X	

The technical specifications are described in Technical Reference TR-NPL-000336. (x) (x)

* All parameters are available within ranges selected by the customer where technically feasible.

(x) Filed under authority of Special Permission No. 93-598 of the Federal Communications Commission.

ACCESS SERVICE

15. Access Service Interfaces and Transmission Specifications (Cont'd)

15.2 Special Access Service (Cont'd)

15.2.1 Network Channel (NC) Codes (Cont'd)

(B) Technical Specifications Packages Telegraph Grade Service

	Package		
SD Code NC Code	TGC* NO	TG1 NW	TG2 NY
Parameter			
Telegraph Distortion	X	X	X
Optional Features and Functions			
Telegraph Bridging	X	X	X

The technical specifications are described in Technical Reference TR-NPL-000336 . (x)

* All parameters are available within ranges selected by the customer where technically feasible.

(x) Filed under authority of Special Permission No. 93-598 of the Federal Communications Commission.

ACCESS SERVICE

15. Access Service Interfaces and Transmission Specifications (Cont'd)

15.2 Special Access Service (Cont'd)

15.2.1 Network Channel (NC) Codes (Cont'd)

(C) Technical Specifications Packages Voice Grade Service

	Package VG-													
SD Code	C*	1	2	3	4	5	6	7	8	9	10	11	12	W
NC Code	LQ	LB	LC	LD	LE	LF	LG	LH	LJ	LK	LN	LP	LR	SE
Parameter														
Attenuation Distortion	X	X	X	X	X	X	X	X	X	X	X	X	X	X
C-Message Noise	X	X	X	X	X	X	X	X	X	X	X	X	X	X
Echo Control	X	X	X	X		X		X	X			X	X	X
Envelope Delay Distortion	X						X	X	X	X	X	X	X	X
Frequency Shift	X						X	X	X	X	X	X	X	X
Impulse Noise	X					X	X	X	X	X	X	X	X	X
Intermodulation Distortion	X							X	X	X	X	X		X
Loss Deviation	X	X	X	X	X	X	X	X	X	X	X	X	X	X
Phase Hits, Gain Hits, and Dropouts	X													
Phase Jitter	X							X	X	X	X	X		X
Signal-to-C Message Noise						X								
Signal-to-C Notch Noise	X				X		X	X	X	X	X	X	X	X

The technical specifications for these parameters (except for dropouts, phase hits, and gain hits) are described in Technical References TR-NPL-000334 and TR-TSY-000335. The technical specifications for dropouts, phase hits, and gain hits are described in Technical Reference PUB 41004, Table 4 . (x) (x)

* The desired parameters are selected by the customer from the list of available parameters.

(x) Filed under authority of Special Permission No. 93-598 of the Federal Communications Commission.

ACCESS SERVICE

15. Access Service Interfaces and Transmission Specifications (Cont'd)

15.2 Special Access Service (Cont'd)

15.2.1 Network Channel (NC) Codes (Cont'd)

(C) Technical Specifications Packages Voice Grade Service (Cont'd)

	Package VG-													
SD Code	C*	1	2	3	4	5	6	7	8	9	10	11	12	W
NC Code	LQ	LB	LC	LD	LE	LF	LG	LH	LJ	LK	LN	LP	LR	SE
Optional Features and Functions														
Central Office Bridging Capability	X		X			X	X				X	X	X	
Central Office Multiplexing	X						X							
Conditioning:														
. C-Type	X					X	X	X	X	X	X			
. Improved Attenuation Distortion	X					X	X	X	X	X	X			
. Improved Envelope Delay Distortion		X				X	X	X	X	X	X			
. Sealing Current	X						X							
. Data Capability	X					X	X	X						
. Telephoto Capability	X											X		
Customer Specified Premises Receive Level	X		X	X			X	X	X					
Improved Return Loss for Effective Four-Wire Transmission	X	X	X	X	X	X	X	X	X	X	X	X	X	
For Effective Two-Wire Transmission	X		X	X				X						
Improved Two-Wire Voice Transmission														X
PPSN Interface Arrangement	X									X				
Selective Signaling Arrangement	X		X			X	X				X	X	X	
Signaling Capability		X	X	X	X			X	X	X				
Transfer Arrangement	X	X	X	X	X	X	X	X	X	X	X	X	X	

ACCESS SERVICE

15. Access Service Interfaces and Transmission Specifications (Cont'd)

15.2 Special Access Service (Cont'd)

15.2.1 Network Channel (NC) Codes (Cont'd)

(D) Technical Specifications Packages Program Audio Service

		Package			
SD Code	APC*	AP1	AP2	AP3	AP4
NC Code	PQ	PE	PF	PJ	PK
Parameter					
Actual Measured Loss	X	X	X	X	X
Amplitude Tracking	X				
Crosstalk	X	X	X	X	X
Distortion Tracking	X				
Gain/Frequency Distortion	X	X	X	X	X
Group Delay	X				
Noise	X	X	X	X	X
Phrase Tracking	X				
Short-Term Gain Stability	X				
Short-Term Loss	X				
Total Distortion	X	X	X	X	X
Optional Features and Functions					
Central Office Bridging Capability	X	X	X	X	X
Gain Conditioning	X	X	X	X	X
Stereo	X				X

The technical specifications are described in Technical Reference (x)
TR-NPL-000337 and associated Addendum . (x)

* The desired parameters are selected by the customer from the list of available parameters.

(x) Filed under authority of Special Permission No. 93-598 of the Federal Communications Commission.

ACCESS SERVICE

15. Access Service Interfaces and Transmission Specifications (Cont'd)

15.2 Special Access Service (Cont'd)

15.2.1 Network Channel (NC) Codes (Cont'd)

(E) Technical Specifications Packages Video Service

	Package		
SD Code	TVC*	TV1	TV2
NC Code	TQ	TV	TW
Video Parameters			
Insertion Gain	X	X	X
Field-Time Distortion	X	X	X
Line-Time Distortion	X	X	X
Short-Time Distortion	X	X	X
Chrominance-Luminance Gain Inequality	X	X	X
Chrominance-Luminance Delay Inequality	X	X	X
Amplitude/Frequency Characteristic	X	X	X
Luminance Non-Linear Distortion	X	X	X
Chrominance Non-Linear Gain Distortion	X	X	X
Chrominance Non-Linear Phase Distortion	X	X	X
Transient Synchronizing Signal Non-Linearty	X	X	X
Dynamic Gain Distortion			
- Picture Signal	X	X	X
- Synchronizing Signal	X	X	X
Differential Gain	X	X	X
Differential Phase	X	X	X
Chrominance-Luminance Intermodulation	X	X	X

* The desired parameters are selected by the customer from the list of available parameters.

ACCESS SERVICE

15. Access Service Interfaces and Transmission Specifications (Cont'd)

15.2 Special Access Service (Cont'd)

15.2.1 Network Channel (NC) Codes (Cont'd)

(E) Technical Specifications Packages Video Service (Cont'd)

	Package		
SD Code	TVC*	TV1	TV2
NC Code	TQ	TV	TW
Audio Channel Parameters Associated with Video Service			
Insertion Gain	X	X	X
Amplitude/Frequency Characteristic	X	X	X
Total Harmonic Distortion & Noise	X	X	X
Maximum Steady-State Test Levels	X	X	X
Gain Differential Between Channels	X	X	
Phase Differential Between Channels	X	X	
Crosstalk	X	X	X
Audio-To-Video Time Differential	X	X	X

The technical specifications are described in Technical Reference TR-NPL-000338 . (x)

* The desired parameters are selected by the customer from the list of available parameters.

(x) Filed under authority of Special Permission No. 93-598 of the Federal Communications Commission.

ACCESS SERVICE

15. Access Service Interfaces and Transmission Specifications (Cont'd)

15.2 Special Access Service (Cont'd)

15.2.1 Network Channel (NC) Codes (Cont'd)

(F) Technical Specifications Packages Digital Data Service

	Package						
SD Code NC Code	D1 XA	D2 XB	D3 XG	D4 XH	D5 XE	D6 YN	
Parameter/Hubbed							(C)
Error-Free Seconds	X	X	X	X	X	X	
Optional Features and Functions/Hubbed							(C)
Central Office Bridging Capability	X	X	X	X	X	X	
PPSN Interface Transfer Arrangement	X	X	X	X	X	X	
Transfer Arrangement	X	X	X	X	X	X	

The Telephone Company will provide a channel capable of meeting a monthly average performance equal to or greater than 99.875% error-free seconds (if provided through a Digital Data hub) while the channel is in service, if it is measured through a CSU equivalent which is designed, manufactured, and maintained to conform with the specifications contained in Technical Reference PUB 62310. (x)

Optional Features and Functions/Non-Hubbed							(N)
Public Packet Data Arrangement				X	X		(N)

Voltages which are compatible with Digital Data Service are delineated in Technical Reference TR-NWT-000341. (x) (T) (x)

(x) Filed under authority of Special Permission No. 93-598 of the Federal Communications Commission.

ACCESS SERVICE

15. Access Service Interfaces and Transmission Specifications (Cont'd)

15.2 Special Access Service (Cont'd)

15.2.1 Network Channel (NC) Codes (Cont'd)

(G) Technical Specifications Packages High Capacity Service

	Package					
SD Code	HC0	HC1	HC1C	HC2	HC3	HC4
NC Code	HS	HC	HD	HE	HF	HG
Parameters						
Error-Free Seconds		X				
Optional Features and Functions						
Automatic Loop Transfer			X			
Central Office Multiplexing:						
DS4 to DS1						X
DS3 to DS1					X	
DS2 to DS1				X		
DS1C to DS1			X			
DS1 to Voice		X				
DS1 to DS0		X				
DS0 to Subrate*	X					
Transfer Arrangement		X				
Clear Channel Capability		X				

A channel with technical specifications package HC1 will be capable of an error-free second performance of 98.75% over a continuous 24 hour period as measured at the 1.544 Mbps rate through a CSU equivalent which is designed, manufactured, and maintained to conform with the specifications contained in Technical Reference PUB 62411 . (x)

* Available only on a channel of 1.544 Mbps facility to a Telephone Company Hub.

(x) Filed under authority of Special Permission No. 93-598 of the Federal Communications Commission.

ACCESS SERVICE

15. Access Service Interfaces and Transmission Specifications (Cont'd)

15.2 Special Access Service (Cont'd)

15.2.1 Network Channel (NC) Codes (Cont'd)

(H) Technical Specifications Packages Synchronous Optical Channel Service (N)

	Package	
SD Code [1]	OC3	OC12
NC Code [2]	OB	OD
Parameters		
Error-Free Seconds	X	X
Optional Features and Functions		
Customer Premises Multiplexing:		
OC12 to OC3		X
OC12 to OC3c		X
OC12 to DS3		X
OC12 to DS1		X
OC3 to STS-1	X	
OC3 to DS3	X	
OC3 to DS1	X	
Central Office Multiplexing:		
OC12 to OC3		X
OC12 to OC3c		X
OC3 to DS3	X	
OC3 to DS1	X	

Technical specifications are delineated in Technical Reference GR-253-CORE, GR-1374-CORE, ANSI T1.102-1993 and ANSI T1.105-1995.

[1]SD = Service Designation Code
[2]NC = Network Channel Code (N)

ACCESS SERVICE

15. Access Service Interfaces and Transmission Specifications (Cont'd)

15.2 Special Access Service (Cont'd)

15.2.2 Network Channel Interface (NCI) Codes

The electrical interface with the Telephone Company for Special Access Services, is defined by an interface code. There are interface codes for both the customer designated premises and the point of termination. Three examples of NCI codes are found in 15.2 preceeding.

ACCESS SERVICE

15. Access Service Interfaces and Transmission Specifications (Cont'd)

15.2 Special Access Service (Cont'd)

15.2.2 Network Channel Interface (NCI) Codes (Cont'd)

(A) Parameter Codes and Options

Parameter

Code	Option	Definition
AB-		accepts 20 Hz ringing signal at customer's point of termination
AC-		accepts 20 Hz ringing signal at customer's end user's point of termination
AH-		analog high capacity interface
	- B	60 kHz to 108 kHz (12 channels)
	- C	312 kHz to 552 kHz (60 channels)
	- D	564 kHz to 3084 kHz (600 channels)
CT -		Centrex Tie Trunk Termination
CS -		digital hierarchy interface at Digital Cross Connect System (DCS)
	- 15	1.544 Mbps (DS1) ANSI Extended Superframe (ESF) Format and B8ZS Clear Channel Capability
	- 15A	1.544 Mbps (DS1) Superframe (SF) format (T)
	- 15B	1.544 Mbps (DS1) Superframe (SF) format and B8ZS Clear Channel Capability
	- 15K	1.544 Mbps (DS1) Extended Superframe (ESF)
DA -		data stream in VF frequency band at customer's end user's point of termination
DB -		data stream in VF frequency band at customer's point of termination
	- 10	VF for TG1 and TG2
	- 43	VF for 43 Telegraph Carrier type signals, TG1 and TG2
DC -		direct current or voltage
	- 1	monitoring interface with series RC combination (McCulloh format)
	- 2	Telephone Company energized alarm channel
	- 3	Metallic facilities (DC continuity) for direct current/low frequency control signals or slow speed data (30 baud)
DD -		DATAPHONE Select-A-Station (and TABS) interface at customer's point of termination
DE -		DATAPHONE Select-A-Station (and TABS) interface at the customer's end user's point of termination

ACCESS SERVICE

15. Access Service Interfaces and Transmission Specifications (Cont'd)

15.2 Special Access Service (Cont'd)

15.2.2 Network Channel Interface (NCI) Codes (Cont'd)

(A) Parameter Codes and Options (Cont'd)

Parameter (Cont'd)

Code	Option	Definition
DS -		digital hierarchy interface
	- 15	1.544 Mbps (DS1) format per PUB 62411 plus D4
	- 15E	8-bit PCM encoded in one 64 kbps of the DS1 signal
	- 15F	8-bit PCM encoded in two 64 kbps of the DS1 signal
	- 15G	8-bit PCM encoded in three 64 kbps of the DS1 signal
	- 15H	14/11-bit PCM encoded in six 64 kbps of the DS1 signal
	- 15J	1.544 Mbps format per PUB 62411
	- 15K	1.544 Mbps format per PUB 62411 plus extended framing format
	- 15L	1.544 Mbps (DS1) with SF signaling
	- 27	274.176 Mbps (DS4)
	- 27L	274.176 Mbps (DS4) with SF signaling
	- 31	3.152 Mbps (DS1C)
	- 31L	3.152 Mbps (DS1C) with SF signaling
	- 44	44.736 Mbps (DS3)
	- 44L	44.736 Mbps (DS3) with SF signaling
	- 63	6.312 Mbps (DS2)
	- 63L	6.312 Mbps (DS2) with SF signaling
DU -		digital access interface
	- 24	2.4 kbps
	- 48	4.8 kbps
	- 19	19.2 kbps
	- 56	56.0 kbps
	- 96	9.6 kbps
	- 64	64.0 kbps
	- A	1.544 Mbps format per PUB 62411
	- B	1.544 Mbps format per PUB 62411 plus D4
	- C	1.544 Mbps format per PUB 62411 plus extended framing format
	- 1KN	1.544 Mbps ANSI Extended Superframe (ESF) Format without line power
	- 1SN	1.544 Mbps ANSI Extended Superframe (ESF) Format with B8ZS Clear Channel Capability and without line power
	- AN	1.544 Mbps free-framing format without line power (only avail. to U.S. Govt. agencies)
	- BN	1.544 Mbps Superframe (SF) Format without line power
	- DN	1.544 Mbps Superframe (SF) Format with B8ZS Clear Channel Capability without line power (T)
DX -		duplex signaling interface at customer's point of termination
DY -		duplex signaling interface at customer's end user's point of termination

ACCESS SERVICE

15. Access Service Interfaces and Transmission Specifications (Cont'd)

15.2 Special Access Service (Cont'd)

15.2.2 Network Channel Interface (NCI) Codes (Cont'd)

(A) Parameter Codes and Options (Cont'd)

Parameter (Cont'd)

Code	Option	Definition
EA -	E	Type I E&M Lead Signaling. Customer at POT or customer's end user at POT originates on E Lead.
EA -	M	Type I E&M Lead Signaling. Customer at POT or customer's end user at POT originates on M Lead.
EB -	E	Type II E&M Lead Signaling. Customer at POT or customer's end user at POT originates on E Lead.
EB -	M	Type II E&M Lead Signaling. Customer at POT or customer's end user at POT originates on M Lead.
EC -		Type III E&M signaling at customer POT
EX -	A	tandem channel unit signaling for loop start or ground start and customer supplies open end (dial tone, etc.) functions.
EX -	B	tandem channel unit signaling for loop start or ground start and customer supplies closed end (dial pulsing, etc.) functions.
GO -		ground start loop signaling - open end function by customer or customer's end user
GS -		ground start loop signaling - closed end function by customer or customer's end user
IA -		E.I.A. (25 pin RS-232)
LA -		end user loop start loop signaling - Type A OPS registered port open end
LB -		end user loop start loop signaling - Type B OPS registered port open end
LC -		end user loop start loop signaling - Type C OPS registered port open end
LO -		loop start loop signaling - open end function by customer or customer's end user
LR -		20 Hz automatic ringdown interface at customer with Telephone Company provided PLAR
LS -		loop start loop signaling - closed end function by customer or customer's end user
NO -		no signaling interface, transmission only

ACCESS SERVICE

15. Access Service Interfaces and Transmission Specifications (Cont'd)

15.2 Special Access Service (Cont'd)

15.2.2 Network Channel Interface (NCI) Codes (Cont'd)

(A) Parameter Codes and Options (Cont'd)

Parameter (Cont'd)

Code	Option	Definition	
PG -		program transmission - no dc signaling	
	- 1	nominal frequency from 50 to 15000 Hz	
	- 3	nominal frequency from 200 to 3500 Hz	
	- 5	nominal frequency from 100 to 5000 Hz	
	- 8	nominal frequency from 50 to 8000 Hz	
PR	-	protective relaying*	(T)
RV	- 0	reverse battery signaling, one way operation, originate by customer	
	- T	reverse battery signaling, one way operation, terminate function by customer or customer's end user	
	SF -	single frequency signaling with VF band at either customer POT or customer's end user POT	
	TF -	telephotograph interface	
	TT -	telegraph/teletypewriter interface at either customer POT or customer's end user POT	
	- 2	20.0 milliamperes	
	- 3	3.0 milliamperes	
	- 6	62.5 milliamperes	
TV -		television interface	
	- 1	combined (diplexed) video and one audio signal	
	- 2	combined (diplexed) video and two audio signals	
	- 5	video plus one (or two) audio 5 kHz signal(s) or one (or two) two wire	
	- 15	video plus one (or two) audio 15 kHz signal(s)	

* Available only for the transmission of audio tone protective relaying signals used in the protection of electric power systems during fault conditions.

ACCESS SERVICE

15. Access Service Interfaces and Transmission Specifications (Cont'd)

15.2 Special Access Service (Cont'd)

15.2.2 Network Channel Interface (NCI) Codes (Cont'd)

(B) Impedance

The nominal reference impedance with which the channel will be terminated for the purpose of evaluating transmission performance:

Value (ohms)	Code(s)
110	0
150	1
600	2
900	3+
135	5
75	6
124	7
Variable	8
100	9

\+ For those interface codes with a 4-wire transmission path at the customer designated POT, rather than a standard 900 ohm impedance the code (3) denotes a customer provided transmission equipment termination. Such terminations were provided to customers in accordance with the F.C.C. Docket No. 20099 Settlement Agreement. (x) (x)

(x) Filed under authority of Special Permission No. 93-598 of the Federal Communications Commission.

ACCESS SERVICE

15. Access Service Interfaces and Transmission Specifications (Cont'd)

15.2 Special Access Service (Cont'd)

15.2.2 Network Channel Interface (NCI) Codes (Cont'd)

(C) Compatible Network Channel Interfaces

The following tables show the Network Channel Interface codes (NCIs) which are compatible:

(1) Metallic

Compatible	CIs
2DC8-1	2DC8-2
2DC8-3	2DC8-3
4DS8-	2DC8-1
4DS8-	2DC8-2

(2) Telegraph Grade

Compatible	CIs	Compatible	CIs
2DB2-10	10IA8	4DB2-10	10IA8
	2TT2-2		2TT2-2
	4TT2-2		4TT2-2
2DB2-43*	10IA8	4DB2-43*	10IA8
	2TT2-2		2TT2-6
	2TT2-6		4TT2-2
	4TT2-2		
		4DS8-	10IA8
2TT2-2	2TT2-2		2TT2-2
			2TT2-6
2TT2-3	2TT2-2		4TT2-2
	4TT2-2		4TT2-6
2TT2-6	2TT2-6	4TT2-2	4TT2-2
	4TT2-6		
		4TT2-6	2TT2-6

* Supplemental Channel Assignment information required.

ACCESS SERVICE

15. Access Service Interfaces and Transmission Specifications (Cont'd)

15.2 Special Access Service (Cont'd)

15.2.2 Network Channel Interface (NCI) Codes (Cont'd)

(C) Compatible Network Channel Interfaces (Cont'd)

(3) Voice Grade

Compatible	CIs	Compatible	CIs	Compatible	CIs
2AB2	2AC2	2DB2	2DA2	2LR2	2LR2
2AB3	2AC2	2DB3	2DA2	2LR3	2LR2
2CT3	2DY2	2DX3	2LA2	2LS	2GS
	4DS8		2LB2		2LS
	4DX2		2LC2		4GS
	4DX3		2LO3		4LS
	4DY2		2LS2		
	4EA2-E		2LS3	2LS2	2LA2
	4EA2-M				2LB2
	4SF2	2GO2	2GS2		2LC2
	4SF3		2GS3		
	6DX2			2LS3	2LA2
	6DY2	2GO3	2GS2		2LB2
	6DY3		2GS3		2LC2
	6EA2-E				
	6EA2-M	2GS	2GS	2NO2	2DA2
	6EB2-E		2LS		2NO2
	6EB2-M		4GS		
	6EB3-E		4LS	2NO3	2NO2
	8EB2-E				2PR2
	8EB2-M	2L02	2LS2		
	8EC2		2LS3	2TF3	2TF2
	9DY2				
	9DY3	2L03	2LS2		
	9EA2		2LS3		
	9EA3				

ACCESS SERVICE

15. Access Service Interfaces and Transmission Specifications (Cont'd)

15.2 Special Access Service (Cont'd)

15.2.2 Network Channel Interface (NCI) Codes (Cont'd)

(C) Compatible Network Channel Interfaces (Cont'd)

(3) Voice Grade (Cont'd)

Compatible	CIs	Compatible	CIs	Compatible	CIs
4AB2	2AC2				
4AB2					
4AC2					
4SF2					
4AB3	2AC2				
4AC2					
4SF2					
4AC2	2AC2				
4AC2					
		4DS8-	2AC2	4DS8-	4DG2
			2DA2		4LR2
			2DY2		4LS2
			2GO2		4NO2
4DA2	4DA2		2GO3		4PR2
				2GS2	4RV2-T
4DB2	2DA2		2GS3		4SF2
	2NO2		2LA2		4SF3
	2PR2		2LB2		4TF2
	4DA2		2LC2		6DA2
	4DB2		2LO2		6DY2
	4NO2		2LO3		6DY3
	4PR2		2LR2		6EA2-E
	6DA2		2LS2		6EA2-M
			2LS3		6EB2-E
4DD3	2DE2		2NO2		6EB2-M
	4DE2		2PR2		6GS2
			2RV2-T		6LS2
			2TF2		8EB2-E
			4AC2		8EB2-M
			4DA2		9DY2
			4DE2		9DY3
			4DX2		9EA2
			4DX3		9EA3
			4DY2		
			4EA2-E		
			4EA2-M		

ACCESS SERVICE

15. Access Service Interfaces and Transmission Specifications (Cont'd)

15.2 Special Access Service (Cont'd)

15.2.2 Network Channel Interface (NCI) Codes (Cont'd) (T)

(C) Compatible Network Channel Interfaces (Cont'd)

(3) Voice Grade (Cont'd)

Compatible	CIs	Compatible	CIs	Compatible	CIs
4DX2	2DY2	4DX2	8EB2-E	4DX3	6DY2
	2LA2		8EB2-M		6DY3
	2LB2		9DY2		6EA2-E
	2LC2		9DY3		6EA2-M
	2LO3		9EA2		6EB2-E
	2LS2		9EA3		6EB2-M
	2LS3				6LS2
	2RV2-T	4DX3	2DY2		8EB2-E
	4DX2		2LA2		8EB2-M
	4DY2		2LB2		9DY2
	4EA2-E		2LC2		9DY3
	4EA2-M		2LO3		9EA2
	4LS2		2LS2		9EA3
	4RV2-T		2LS3		
	4SF2		2RV2-T	4DY2	2DY2
	4SF3		4DX2		4DY2
	6DY2		4DX3		
	6DY3		4DY2		
	6EA2-E		4EA2-E		
	6EA2-M		4EA2-M		
	6EB2-E		4LS2		
	6EB2-M		4RV2-T		
	6LS2		4SF2		
			4SF3		

ACCESS SERVICE

15. Access Service Interfaces and Transmission Specifications (Cont'd)

15.2 Special Access Service (Cont'd)

15.2.2 Network Channel Interface (NCI) Codes (Cont'd)

(C) Compatible Network Channel Interfaces (Cont'd)

(3) Voice Grade (Cont'd)

Compatible	CIs	Compatible	CIs	Compatible	CIs
4EA2-E	2DY2	4EA3-E	2DY2	4GO2	2GO2
	4DY2		4DY2		2GO3
	4EA2-E		4EA2-E		2GS2
	4EA2-M		4EA2-M		2GS3
	4SF2		4SF2		4GS2
	6DY2		6DY2		4SF2
	6DY3		6DY3		6GS2
	6EB2-E		6EA2-E		
	6EB2-M		6EA2-M	4GO3	2GO2
	8EB2-E		6EB2-E		2GS2
	8EB2-M		6EB2-M		2GS3
	9DY2		8EB2-E		4GS2
	9DY3		8EB2-M		4SF2
			9DY2		6GS2
4EA2-M	2DY2		9DY3		
	4DY2		9EA2		
	4EA2-M		9EA3	4GS	2GS
	4SF2				2LS
	6DY2				4GS
	6DY3				4LS
	6EB2-E				
	6EB2-M				
	8EB2-E				
	8EB2-M				
	9DY2				
	9DY3				

ACCESS SERVICE

15. Access Service Interfaces and Transmission Specifications (Cont'd)

15.2 Special Access Service (Cont'd)

15.2.2 Network Channel Interface (NCI) Codes (Cont'd)

(C) Compatible Network Channel Interfaces (Cont'd)

(3) Voice Grade (Cont'd)

Compatible	CIs	Compatible	CIs	Compatible	CIs
4LO2	2LS2	4LS3	2LA2	4SF2	2LO3
	2LS3		2LB2		2LR2
	4LS2		2LC2		2LS2
	4SF2		2LO2		2LS3
	6LS2		2LO3		2RV2-T
			4SF2		4AC2
4LO3	2LS2				4DY2
	2LS3	4NO2	2DA2		4LS2
	4LS2		2DE2		4RV2-T
	4SF2		2NO2		4SF2
	6LS2		4DA2		6DY2
			4DE2		6DY3
4LR2	2LR2		4NO2		6GS2
	4LR2		6DA2		9DY2
	4SF2				9DY3
		4RV2-0	2RV2-T		
4LR3	2LR2		4RV2-T	4SF3	2DY2
	4LR2		4SF2		2GO3
	4SF2				2GS2
					2GS3
4LS	2GS	4SF2	2AC2		2LA2
	2LS		2DY2		2LB2
	4GS		2GS2		2LC2
	4LS		2GS3		2LO3
			2LA2		2LR2
4LS2	2LA2		2LB2		
	2LB2		2LC2		
	2LC2				
	2LO2				
	2LO3				

ACCESS SERVICE

15. Access Service Interfaces and Transmission Specifications (Cont'd)

15.2 Special Access Service (Cont'd)

15.2.2 Network Channel Interface (NCI) Codes (Cont'd)

(C) Compatible Network Channel Interfaces (Cont'd)

(3) Voice Grade (Cont'd)

Compatible	CIs	Compatible	CIs	Compatible	CIs
4SF3	2LS2	6DA	4DA2	6DY32	DY2
	2LS3		6DA2		4DY2
	2RV2-T				6DY2
	4DY2	6DX2	2DY2		6DY3
	4EA2-E		4DY2		
	4EA2-M		4EA2-E	6EA2-E	2AC2
	4GS2				
	4LR2		4EA2-M		2DY2
	4LS2		4SF2		2LA2
	4RV2-T		6DY2		2LB2
	4SF2		6DY3		2LC2
	4SF3		6EA2-E		2LO3
	6DY2		6EA2-M		2LS2
	6DY3		6EB2-E		2LS3
	6EB2-E		6EB2-M		2RV2-T
	6EB2-M		8EB2-E		4AC2
	6GS2		8EB2-M		4DY2
	6LS2		9DY2		4EA2-E
	9DY2		9DY3		4EA2-M
	9DY3		9EA2		4LS2
	9EA2		9EA3		4RV2-T
	9EA3				4SF2
		6DY2	2DY2		4SF3
4TF2	2TF2		4DY2		6DY2
	4TF2		6DY2		6DY3
					6EA2-E
					6EA2-M

ACCESS SERVICE

15. Access Service Interfaces and Transmission Specifications (Cont'd)

15.2 Special Access Service (Cont'd)

15.2.2 Network Channel Interface (NCI) Codes (Cont'd)

(C) Compatible Network Channel Interfaces (Cont'd)

(3) Voice Grade (Cont'd)

Compatible	CIs	Compatible	CIs	Compatible	CIs
6EA2-E	6EB2-E	6EA2-M	6DY2	6EB3-E	2DY2
	6EB2-M		6DY3		4DY2
	6LS2		6EA2-M		4EA2-E
	8EB2-E		6EB2-E		4EA2-M
	8EB2-M		6EB2-M		4SF2
	9DY2		6LS2		6DY2
	9DY38		EB2-E		6DY3
			8EB2-M		6EA2-E
6EA2-M	2AC2		9DY2		6EA2-M
	2DY2		9DY3		8EB2-E
	2LA2				8EB2-M
	2LB2	6EB2-E	2DY2		9DY2
	2LC2		4DY2		9DY3
	2LO3		4SF2		9EA2
	2LS2		6DY2		9EA3
	2LS3		6DY3		
	2RV2-T		6EB2-E	6EX2-A	2GS2
	4AC2		6EB2-M		2GS3
	4DY2		9DY2		2LS2
	4EA2-E		9DY3		2LS3
	4EA2-M				4GS2
	4LS2	6EB2-M	2DY2		4LS2
	4RV2-T		4DY2		4SF2
	4SF2		4SF2		6GS2
	4SF3		6DY2		6LS2
			6DY3		
			6EB2-M		
			9DY2		
			9DY3		

ACCESS SERVICE

15. Access Service Interfaces and Transmission Specifications (Cont'd)

15.2 Special Access Service (Cont'd)

15.2.2 Network Channel Interface (NCI) Codes (Cont'd)

(C) Compatible Network Channel Interfaces (Cont'd)

(3) Voice Grade (Cont'd)

Compatible	CIs	Compatible	CIs	Compatible	CIs
6EX2-B	2GO3	8EB2-E	2AC2	8EB2-M	2AC2
	2LA2		2DY2		2DY2
	2LB2		2LA2		2LA2
	2LC2		2LB2		2LB2
	2LO2		2LC2		2LC2
	2LO3		2LO3		2LO3
	2LR2		2LS2		2LS2
	4LR2		2LS3		2LS3
	4SF2		2RV2-T		2RV2-T
			4AC2		4AC2
6GO2	2GO2		4DY2		4DY2
	2GS2		4LS2		4LS2
	2GS3		4RV2-T		4RV2-T
	4GS2		4SF2		4SF2
	4SF2		4SF3		4SF3
	6GS2		6DY2		6DY2
			6DY3		6DY3
6LO2	2LS2		6EB2-E		6EB2-E
	2LS3		6EB2-M		6EB2-M
	4LS2		6LS2		6LS2
	4SF2		8EB2-E		8EB2-M
	6LS2		8EB2-M		9DY2
			9DY2		9DY3
6LS2	2LA2		9DY3		
	2LB2				
	2LC2				
	2LO2				
	2LO3				
	4SF2				

ACCESS SERVICE

15 .Access Service Interfaces and Transmission Specifications (Cont'd)

15.2 Special Access Service (Cont'd)

15.2.2 Network Channel Interface (NCI) Codes (Cont'd)

(C) Compatible Network Channel Interfaces (Cont'd)

(3) Voice Grade (Cont'd)

Compatible	CIs	Compatible	CIs	Compatible	CIs
8EC2	2DY2	9DY2	2DY2	9EA3	2DY2
	4DY2		4DY2		4DY2
	4EA2-E		6DY2		4EA2-E
	4EA2-M		6DY3		4EA2-M
	4SF2		9DY2		6DY2
	6DY2				6DY3
	6DY3	9DY3	2DY2		6EA2-E
	6EA2-E		4DY2		6EA2-M
	6EA2-M		6DY2		6EB2-E
	6EB2-E		6DY3		6EB2-M
	6EB2-M		9DY2		8EB2-E
	8EB2-E		9DY3		8EB2-M
	8EB2-M				9DY2
	9DY2	9EA2	2DY2		9DY3
	9DY3		4DY2		9EA3
	9EA2		4EA2-E		
	9EA3		4EA2-M		
			6DY2		
			6DY3		
			6EA2-E		
			6EA2-M		
			6EB2-E		
			6EB2-M		
			8EB2-E		
			8EB2-M		
			9DY2		
			9DY3		
			9EA2		
			9EA3		

ACCESS SERVICE

15. Access Service Interfaces and Transmission Specifications (Cont'd)

15.2 Special Access Service (Cont'd)

15.2.2 Network Channel Interface (NCI) Codes (Cont'd)

(C) Compatible Network Channel Interfaces (Cont'd)

(4) Program Audio

Compatible	CIs	Compatible	CIs
2PG2-1	2PG1-1 2PG2-1	4DS8-15E	2PG1-3 2PG2-3
2PG2-3	2PG1-3 2PG2-3	4DS8-15F	2PG1-5 2PG2-5
2PG2-5	2PG1-5 2PG2-5	4DS8-15G	2PG1-8 2PG2-8
2PG2-8	2PG1-8 2PG2-8	4DA8-15H	2PG1-1 2PG2-1

ACCESS SERVICE

15. Access Service Interfaces and Transmission Specifications (Cont'd)

15.2 Special Access Service (Cont'd)

15.2.2 Network Channel Interface (NCI) Codes (Cont'd)

(C) Compatible Network Channel Interfaces (Cont'd)

(5) Video

Compatible	CIs	Compatible	CIs
2TV6-1	4TV6-15 4TV7-15	4TV7-5	4TV6-5 4TV7-5
2TV6-2	6TV6-15 6TV7-15	4TV7-15	4TV6-15 4TV7-15
2TV7-1	4TV6-15 4TV7-15	6TV6-5	6TV6-5 6TV7-5
2TV7-2	6TV6-15 6TV7-15	6TV6-15	6TV6-15 6TV7-15
4TV6-5	4TV6-5 4TV7-5	6TV7-5	6TV6-5 6TV7-5
4TV6-15	4TV6-15 4TV7-15	6TV7-15	6TV6-15 6TV7-15

ACCESS SERVICE

15. Access Service Interfaces and Transmission Specifications (Cont'd)

15.2 Special Access Service (Cont'd)

15.2.2 Network Channel Interface (NCI) Codes (Cont'd)

(C) Compatible Network Channel Interfaces (Cont'd)

(6) Digital Data

Compatible	CIs	Compatible	CIs	Compatible	CIs
4DS8-15	4DS8-15+	4DU5-24	4DU5-24	6DU5-24	6DU5-24
4DU5-24	4DU5-48	4DU5-48	4DU5-48	6DU5-48	6DU5-48
4DU5-56	4DU5-96	4DU5-96	4DU5-96	6DU5-56	6DU5-56
6DU5-24	6DU5-48	4DU8-56	4DU5-56	6DU5-96	6DU5-96
6DU5-96					

\+ Available only as a cross connect of two digital channels at appropriate digital speeds at a Telephone Company hub.

ACCESS SERVICE

15. Access Service Interfaces and Transmission Specifications (Cont'd)

15.2 Special Access Service (Cont'd)

15.2.2 Network Channel Interface (NCI) Codes (Cont'd)

(C) Compatible Network Channel Interfaces (Cont'd)

(7) High Capacity

Compatible	CIs	Compatible	CIs
4DS0-63	4DS0-63 4DU8-A,B or C 6DU8-A,B or C	4DS8-15J	4DU8-A 6DU8-A
		4DS8-15K	4DU8-B 4DU8-C 6DU8-B 6DU8-C
4DS6-27	4DS6-27 4DU8-A,B or C 6DU8-A,B or C		
4DS6-44	4DS6-44 4DU8-A,B or C 6DU8-A,B or C	4DS8-31	4DS8-31 4DU8-A,B or C 6DU8-A,B or C
4DS8-15	4DS8-15+ 4DU8-B 6DU8-8	4DU8-A,B or C	4DU8-A,B or C

(8) Synchronous Optical Channel Service (N)

Compatible	CIs	Compatible	CIs
4DS9-1S	4DU9-1S	02S0F-A	02S0F-A
4DS9-1K	4DU9-1K	02S0F-B	02S0F-B
		02S0F-C	02S0F-C
		02S0F-D	02S0F-D
		02S0F-E	02S0F-E
		02S0F-F	02S0F-F (N)

\+ Available only as a cross connect of two individual channels of 1.544 Mbps facilities at a Telephone Company hub.

ACCESS SERVICE

16. Public Packet Data Network

Public Packet Data Networks utilize separate data networks, comprised of switching and transmission facilities. The networks provide for the transfer of data provided by a customer in a frame format. The data is separated into discrete segments for transmission through the public packet data network.

16.1 Frame Relay Access Service

16.1.1 General

(A) General

Frame Relay Access Service (FRAS) is a medium-speed, connection-oriented packet-switched data service that allows for the interconnection of Local Area Networks (LANs) or other compatible end user customer premises equipment for the purpose of connecting to an access customer's interstate network. The terminal equipment accumulates the customer data and puts it into a frame relay format suitable for transmission over the FRAS network. This terminal equipment must conform to American National Standards Institute and Committee Consultat de International Telegraphique et Telephonique (CCITT) standards.

FRAS permits customers to share network bandwidth for data transmissions.

Rates and charges for FRAS are set forth in 17.4.8 following. The application of rates for FRAS is described in 16.1.2 following. (T)

In addition to the regulations and charges specified in this section, the general regulations and charges specified in other sections of this tariff apply as appropriate.

(B) Service Description

FRAS is a transport service that facilitates the exchange of variable length information units (frames) between customer connections. Frames travel a fixed path through the network with an address that specifies the permanent virtual connection. Addresses are read by the network processor and the frames are relayed to the preassigned destination.

ACCESS SERVICE

16. Public Packet Data Network (Cont'd)

16.1 Frame Relay Access Service (Cont'd)

16.1.1 General (Cont'd)

(B) Service Description (Cont'd)

The service includes: the End User Port, either Standard or Channelized, (also referred to as the User Network Interface (UNI)) connection, the Access Customer Port (also referred to as the Network-to-Network interface (NNI)) connection, and Permanent Virtual Connections (PVC) which have associated Committed Information Rates (CIRs). A special access facility (ordered out of Section 7 preceding) is used to connect to the frame relay switch. In addition to the foregoing services, the Telephone Company may also provide Frame Relay Access Connection arrangements described at Section 16.1.1(E) following, and Frame Relay Inter-Network Connection arrangements described at Section 16.1.1(F) following. (N) (N)

The Standard End User Port connection permits FRAS compatible end user customer premises equipment (CPE) to originate or terminate an interstate access service. Connections between end user customer premises equipment and the telephone company frame relay switch may be available at speeds of 56.0 kbps, 64.0 kbps, 1.544 Mbps, or 44.736 Mbps. The Channelized End User Port allows an end user to purchase FRAS at speeds of 56.0/64.0 kbps expandable, in addition to speeds greater than 64.0 kbps and up to 1.544 Mbps. Each End User Port connection requires the identification of a corresponding terminating port connection(s). (C) (C)

The Access Customer Port connection connects the telephone company frame relay switch and the access customer's network. The facility connecting an access customer network to the telephone company frame relay switch may be offered at 1.544 Mbps or 44.736 Mbps as indicated in the Telephone Company's FRAS rates at Section 17.4.8 following. (C) (N)

Connections are provided via Channel Terminations (see Section 7 Special Access Digital Data and High Capacity Services preceding). All regulations, rates and charges as specified in Section 7 will apply in addition to the rates and charges associated with FRAS.

All End User Port connections must be in conformance with American National Standards Institute (ANSI) standards T1.606-1990, T1.606 Addendum 1-1991, T1.606a-1992, T1.617, Annex D-1992. All Access Customer Port connections must be in conformance with ANSI standards T1.606b-1993 and Bellcore Technical Reference TR-TSV-001370, Issued: May 1993.

ACCESS SERVICE

16. Public Packet Data Network (Cont'd)

(N)

16.1 Frame Relay Access Service (Cont'd)

16.1.1 General (Cont'd)

(B) Service Description (Cont'd)

PVCs are software defined, end-to-end, bi-directional communications paths that are established and dis-established via the access service order process. While no physical circuits are dedicated, the two network addresses (one from each port connection) are connected electronically to form a PVC.

There are two types of PVCs available. The standard PVC establishes a communications path between two ports on the same frame relay switch. The extended PVC establishes a communications path between two ports on two interconnected telephone company frame relay switches.

At the time service is ordered the number of PVCs will be identified along with their Committed Information Rates. CIR is the bit rate at which the FRAM network commits to transfer data. Committed Information Rates provide for frame relay switch throughput at designated speeds. (See 16.1.2 (A) (3) following.) This information is required for network routing purposes.

(C) Ordering Options and Conditions

Frame Relay Access Service is ordered under the Access Order provisions set forth in Section 5 preceding. Also included in that section are other charges which may be associated with ordering FRAS (e.g., Service Date Change Charges, Cancellation Charges, etc.).

A minimum of two FRAS port connections are required for data to be transported between customer designated premises. (N)

ACCESS SERVICE

16. Public Packet Data Network (Cont'd)

16.1 Frame Relay Access Service (Cont'd)

16.1.1 General (Cont'd)

(C) Ordering Options and Conditions (Cont'd)

When placing an order for FRAS the customer must specify:

- The number of Permanent Virtual Connections (PVCs) required;
- the location of the ports for each PVC;
- the Committed Information Rates (CIRs) that will be associated with each PVC;
- that the traffic consists of more than ten percent interstate traffic.

The port connecting the special access facility to the telephone company frame relay switch must be ordered and provided at the same speed as the special access facility.

When connecting to the port of another customer, the ordering customer must obtain authorization from the other customer.

When an extended PVC is ordered, the customer is responsible for placing the order with all telephone companies involved.

(D) Acceptance Testing

At no additional charge, the Telephone Company will, at the customer's request, cooperatively test at the time of installation.

(E) Service Description for Frame Relay Access Connection (FRAC) (N)

As an alternative to providing a FRAS connection between the customer designated premises (CDP) and the frame relay switch through a combination of an End User Port and Special Access Digital Data or High Capacity transport, the Telephone Company may provide the FRAS connection by a Frame Relay Access Connection (FRAC). The FRAC combines a frame relay compatible 56.0 kbps, 64.0 kbps, 1.544 Mbps or 44.736 Mbps digital transport facility with an End User Port on a frame relay switch. The FRAC includes the Telephone (N)

ACCESS SERVICE

16. Public Packet Data Network (Cont'd)

16.1 Frame Relay Access Service (Cont'd)

16.1.1 General (Cont'd)

(E) Service Description for Frame Relay Access Connection (FRAC) (N)

Company facility between the CDP and the customer's serving wire center, the interoffice transport (if applicable) between the customer's serving wire center and a Telephone Company wire center equipped with a frame relay switch, and a Standard End User Port. The Standard End User Port is described at Section 16.1.1(B) preceding.

Telephone Companies offering FRAS under a FRAC arrangement are indicated by inclusion of a FRAC rate in Section 17.4.8 following.

(F) Service Description for Frame Relay Inter-Network Connection (FRIC)

As an alternative to providing a FRAS network to network connection between the Telephone Company's frame relay switch and the CDP through a combination of an Access Customer Port and Special Access High Capacity transport, the Telephone Company may provide the FRAS network to network connection by a Frame Relay Inter-network Connection (FRIC). The FRIC combines a frame relay compatible 1.544 Mbps or 44.736 Mbps digital transport facility with a port on a frame relay switch. The FRIC includes the Telephone Company facility between the customer designated premises (CDP) and the customer's serving wire center, the interoffice transport (if applicable) between the customer's Telephone Company serving wire center and a Telephone Company wire center equipped with a frame relay switch, and the Access Customer Port. The Access Customer Port is described at Section 16.1.1(B)preceding. The FRIC is offered at speeds of 1.544 Mbps or 44.736 Mbps.

A FRIC is not available for connection to customer frame relay networks that are not located within the Telephone Company's service area. Customers with frame relay networks located outside the Telephone Company's service area must separately order a FRAS Access Customer Port and Special Access High Capacity Channel transport in addition to any required PVC or FRAC services.

Telephone Companies offering FRAS under a FRIC arrangement are indicated by inclusion of a FRAC rate in Section 17.4.8 following. (N)

ACCESS SERVICE

16. Public Packet Data Network (Cont'd)

16.1 Frame Relay Access Service (Cont'd)

16.1.2 Rate Regulations

This section contains the specific regulations governing the rates and charges that apply for Frame Relay Access Service.

(A) Rate Categories

The following diagrams depict a generic view of the components of FRAS and the manner in which the components are combined to provide Frame Relay Access Service and Interconnected Frame Relay Access Service.

Frame Relay Access Service

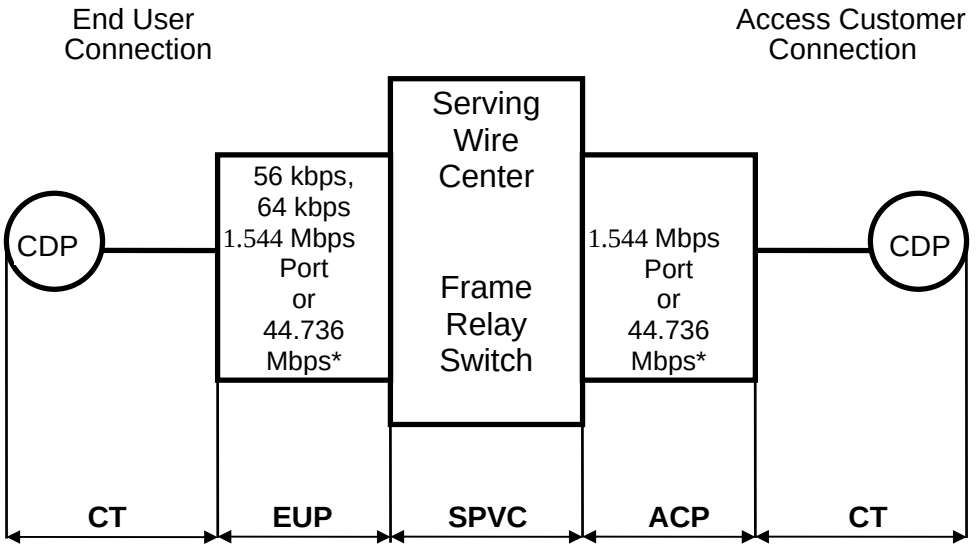

(C)
(C)
(C)
(C)

CDP - Customer Designated Premises
CT - Channel Termination
EUP - End User Port
SPVC- Standard Permanent Virtual Connection
ACP - Access Customer Port

* 44.736 Data speed availability is subject to individual Telephone Company offerings as indicated in Section 17.4.8 following. (N) (N)

ACCESS SERVICE

16. Public Packet Data Network (Cont'd)

16.1 Frame Relay Access Service (Cont'd)

16.1.2 Rate Regulations

(N)

Frame Relay Access Service

For Telephone Companies with Frame Relay Access Connection (FRAC) and Frame Relay Inter-network Connection (FRIC) rate elements (access customer located in Telephone Company service area)

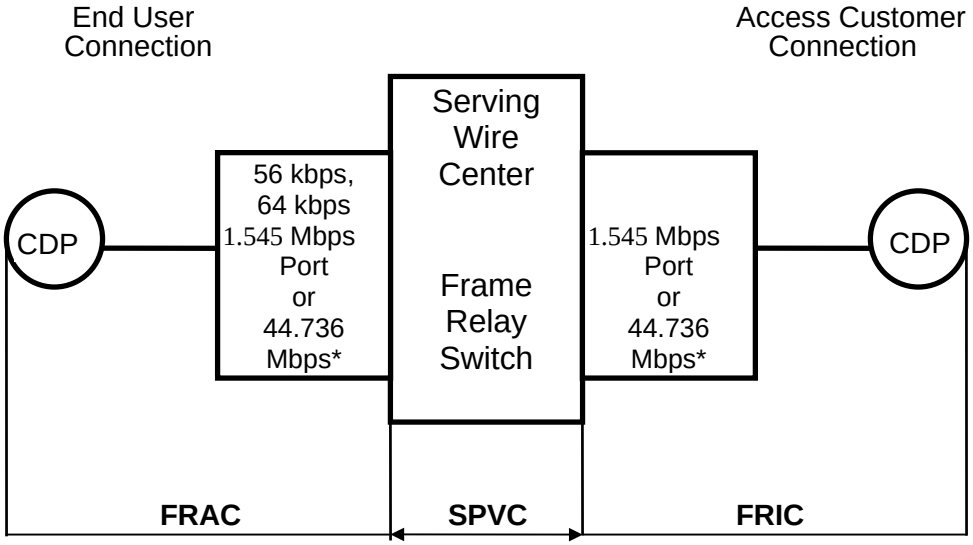

CDP - Customer Designated Premises
FRAC – Frame Relay Access Connection
SPVC - Standard Permanent Virtual Connection
FRIC - Frame Relay Inter-Network Connection

* 44.736 Data speed availability is subject to individual Telephone Company offerings as indicated in Section 17.4.8 following.

(N)

ACCESS SERVICE

16. Public Packet Data Network (Cont'd)

16.1 Frame Relay Access Service (Cont'd)

16.1.2 Rate Regulations (Cont'd)

(A) Rate Categories (Cont'd)

Interconnected
Frame Relay Access Service

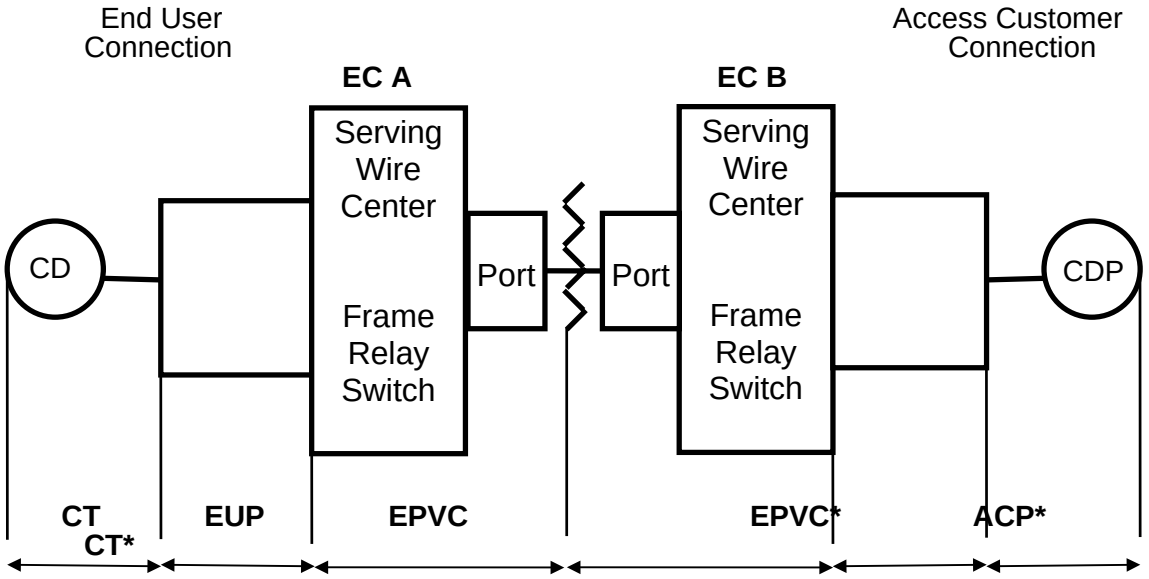

(C)

CDP - Customer Designated Premises
CT - Channel Termination
EUP - End User Port
SPVC- Standard Permanent Virtual Connection
ACP - Access Customer Port

* The application of these charges by EC B is dependent upon EC B's access tariff.

Frame Relay Access Service is available at designated wire center locations only.

(1) End User Port - Standard

The Standard End User Port is the physical location in the telephone switching office where the special access facility of the customer connects to the FRAS Network. It receives the data frame from the end user customer's Local Area Network or other compatible CPE device and verifies that the end user connection and the corresponding access customer connection are valid before relaying the frame to the destination end point.

ACCESS SERVICE

16. Public Packet Data Network (Cont'd)

16.1 Frame Relay Access Service (Cont'd)

16.1.2 Rate Regulations (Cont'd)

(A) Rate Categories (Cont'd)

(1) End User Port - Standard (Cont'd)

The Standard End User Port consists of either a 56.0 kbps, 64.0 kbps, or a 1.544 Mbps port interface connection. The port connecting the special access facility to the telephone company frame relay switch must be ordered and provided at the same speed as the special access facility. (See 7.9 and 7.10 preceding.) When a term discount is applied to a special access DS1 facility connecting to a 1.544 port on a frame relay switch, the discount on the port will be equivalent to the discount on the special access DS1 facility. Section 7.2.8(A) preceding specifies the conditions under which a term discount is applicable.

(2) End User Port – Channelized

The Channelized End User Port allows an end user to purchase Frame Relay Access Service at speeds of 56/64 expandable, in addition to speeds greater than 64 kbps and up to 1.544 Mbps. Full DS1 connectivity between the customer designated premises (CDP) and the frame relay switch is required. End users must purchase a dedicated DS1 special access facility from their CDP to a Digital Access Cross-Connect System (DACS) at their serving wire center to access the channelized connection. The Channelized End User Port configuration connects the DACS located at the end user's serving wire center with a DS1 port on the Frame Relay Switch. The channelized DS1 facility from the end user's serving wire center to the frame relay switch is a direct connection between the frame relay switch and the serving wire center DACS and is available only for the provisioning of frame relay service. (T) (T)

End user customers can purchase a non-expandable Channelized End User Port available at speeds of 56 and 64 kbps. The end user must purchase a dedicated 56/64 kbps loop to a DS1 to a voice multiplexor at the serving wire center for each 56/64 kbps channelized port connection.

The Channelized End User Port element is available only for use with Frame Relay Access Service and where sufficient facilities exist to provide the service. In addition, pricing and provisioning of frame relay services provided jointly with other companies will be dependent upon other company's DS1 prices and their agreement to provide channelized transport in their or other companies operating areas.

ACCESS SERVICE

16. Public Packet Data Network (Cont'd)

16.1 Frame Relay Access Service (Cont'd)

16.1.2 Rate Regulations (Cont'd)

(A) Rate Categories (Cont'd)

(3) Access Customer Port (C) (M)

The Access Customer Port is the physical location in the telephone company switching offices where the access customer's special access facility connects to the telephone company's FRAS network. It specifies how a frame relay switch sends and receives data from a frame relay access customer's network. The Access Customer Port is offered at a speed of 1.544 Mbps. The port connecting the special access facility to the telephone company frame relay switch must be ordered and provided at the same speed as the special access facility. (See 7.9 and 7.10 preceding.) Section 7.2.8(A) preceding specifies the conditions under which a term discount is applicable. (M)

(4) Permanent Virtual Connection (PVC) (C)

A PVC is a software defined communications path between two port connections within the FRAS network.

Each PVC is provisioned with a customer selected Committed Information Rate. The CIR is a transmission speed specified by the customer. CIRs range from 8 kbps to 768 kbps. The telephone company will provide switch capacity to permit the customer to transmit information with guaranteed delivery at the specified CIR. Transmissions at a rate above the subscribed CIR will be marked "Discard Eligible" (DE), and, should network congestion occur, are subject to being dropped by the network. If CIR is set equal to zero, then all frames will be marked DE. The CIR value selected cannot exceed the maximum transportation speed of the port at either end of the PVC. (C) (C)

Customers will be permitted to order multiple PVCs on a given port subject to switch limitations. Customers anticipating non-simultaneous transmission may order CIRs assigned to these multiple PVCs, the sum of which may theoretically exceed the actual throughput of the port. However, when simultaneous transmission of multiple PVCs occurs, the total of the transmission rate (CIRs) may not exceed the actual throughput of the port.

There are two types of PVCs available. The standard PVC establishes a communications path between the End User Port and the Access Customer Port on the same frame relay switch. The extended PVC establishes a communications path between the End User Port on a telephone company's frame relay switch and an Access Customer Port on another interconnected telephone company's frame relay switch.

Certain material currently found on this page formerly appeared on Original Page 16-7

ACCESS SERVICE

16. Public Packet Data Network (Cont'd)

16.1 Frame Relay Access Service (Cont'd)

16.1.2 Rate Regulations (Cont'd)

(A) Rate Categories (Cont'd)

(5) Frame Relay Access Connection (FRAC) (N)

The Frame Relay Access Connection (FRAC) rate element recovers the costs associated with the communication path between the end user's premises and the Telephone Company wire center equipped with a frame relay switch. The FRAC includes the physical transmission facility between the customer designated premises (CDP) and the customer's serving wire center, the interoffice transport (if applicable) between the customer's serving wire center and a wire center equipped with a frame relay switch, and the end user port on the Telephone Company's frame relay switch.

One FRAC charge applies per CDP at which the FRAS connection is terminated. This applies even if the CDP and the frame relay switch are collocated in a Telephone Company building.

Telephone Companies offering FRAS under a FRAC arrangement are indicated by inclusion of a FRAC rate in Section 17.4.8 following. Telephone Companies offering FRAS under a FRAC arrangement will assess a single monthly FRAC charge in lieu of separate charges for a Standard End User Port charge under Section 16.1.2(A)(1) preceding and Special Access Digital Data or High Capacity Service under, respectively, Sections 7.9 and 7.10 preceding. (N)

ACCESS SERVICE

16. Public Packet Data Network (Cont'd)

16.1 Frame Relay Access Service (Cont'd)

16.1.2 Rate Regulations (Cont'd)

(A) Rate Categories (Cont'd)

(6) Frame Relay Inter-network Connection (FRIC) (N)

The Frame Relay Inter-network Connection (FRIC) rate element recovers the costs associated with the communication path for a network-to-network connection between the customer designated premises (CDP) and the Telephone Company wire center equipped with a frame relay switch. The FRIC includes the physical transmission facility between the CDP and the customer's serving wire center, the interoffice transport (if applicable) between the customer's serving wire center and a wire center equipped with a frame relay switch, and the Access Customer Port on the CDP at which the FRAS connection is terminated. This applies even if the CDP and the frame relay switch are collocated in a Telephone Company building.

A FRIC is not available for connection to customer frame relay networks that are not located within the Telephone Company's service area. Customers with frame relay networks located outside the Telephone Company's service area must separately order a FRAS Access Customer Port and Special Access High Capacity Channel transport in addition to any required PVC or FRAC services.

Telephone Companies offering FRAS under a FRIC arrangement are indicated by inclusion of a FRAC rate in Section 17.4.8 following. (N)

ACCESS SERVICE

16. Public Packet Data Network (Cont'd)

16.1 Frame Relay Access Service (Cont'd)

16.1.2 Rate Regulations (Cont'd)

(B) Types of Rates and Charges

There are two types of rates and charges. They are monthly rates and nonrecurring charges. The rates and charges are described as follows:

(1) Monthly Rates

Monthly rates are recurring rates that apply each month or fraction thereof that a FRAS is provided. For billing purposes, each month is considered to have 30 days.

(2) Nonrecurring Charges

Nonrecurring charges are one-time charges that apply for specific work activity (i.e., installation or change to an existing service). The types of nonrecurring charges that apply for FRAS are: installation of service and service rearrangements. These charges are in addition to the Access Order Charges as specified in 17.4.1 following:

(a) Installation of Service

Nonrecurring charges apply for the installation of PVCs. (N)

(N)

ACCESS SERVICE

16. Public Packet Data Network (Cont'd)

16.1 Frame Relay Access Service (Cont'd)

16.1.2 Rate Regulations (Cont'd)

(B) Types of Rates and Charges (Cont'd)

(2) Nonrecurring Charges (Cont'd)

(b) Service Rearrangements

Service Rearrangements are changes to existing (installed) service.

A PVC Rearrangement Charge will be applied whenever a change is made to the CIR of an existing PVC after initial port installation and/or a change is made to the termination port destination of the PVC.

Administrative changes will be made without charge(s) to the customer. Administrative changes are as follows:

- Change of customer name,
- Change of customer or customer's end user premises address when the change of address is not a result of physical relocation of equipment,
- Change in billing data (name, address, or contact name or telephone number),
- Change of agency authorization,
- Change of customer circuit identification,
- Change of billing account number,
- Change of customer or customer's end user contact name or telephone number, and
- Change of jurisdiction. (N)

(N)

ACCESS SERVICE

16. Public Packet Data Network (Cont'd)

(N)

16.1 Frame Relay Access Service (Cont'd)

16.1.2 Rate Regulations (Cont'd)

(C) Minimum Period

The minimum period for FRAS is one month and the full monthly rate will apply to the first month. Adjustments for quantities of services established or discontinued in any billing period beyond the minimum period are as set forth in 2.4.1(F). The minimum period for the Frame Relay Service 1.544 Mbps port are as set forth in 2.4.2 and 5.5.1.

(D) Optional Features

The Optional Features rate category provides for optional features which may be added to FRAS in order to improve its quality or utility to meet specific communications requirements.

(1) Data Link Channel Identifiers (DLCI)

This Feature provides for the assignment of DLCIs per end user or access customer port connection. One DLCI is required per end user or access customer port. When any two DLCIs are mapped together, a PVC can be created. An initial DLCI is included with each end user or access customer port. An additional charge applies for every DLCI after the first one for each type of port.

(N)

ACCESS SERVICE

16. Public Packet Data Network (Cont'd)

16.1 Frame Relay Access Service (Cont'd)

16.1.3 Optional Rate Plans (N)

A Term Discount plan is available for Frame Relay Access Service (FRAS). The Term Discount applies to the Frame Relay Access Connection (FRAC) and Frame Relay Inter-network Connection (FRIC) charges. The End User Port, Inter-network Customer Port charges, and Permanent Virtual Connections (PVCs) are not eligible for a Term Discount. Under the Term Discount plan, the current monthly rates for eligible services are reduced by a fixed percentage. The amount of the discount percentage differs based on the length of the service commitment period selected by the customer. The Term Discount percentages for FRAS are as set forth in 17.4.8 following.

The Term Discount Optional Rate Plan is only available for those Telephone Companies indicating the Term Discounts within their FRAS rate section in Section 17.4.8 following.

The minimum service period on a month-to-month basis is one month. Under an Optional Rate Plan, the minimum service period is twelve months.

(A) Term Discounts

FRAS may be ordered at the customer's option on a month-to-month basis or for Term Discount periods of 36 months (3 years) or 60 months (5 years).

The minimum service period for all Term Discount plans is twelve months. The customer must specify the length of the service commitment period at the time the service is ordered.

For customers that subscribe to the Term Discount plan for 36 or 60 months, the Term Discount percentage as set forth in 17.4.8 following will be frozen from Company initiated decreases for the entire discount period at the percent in effect at the beginning of the Term Discount period. (N)

ACCESS SERVICE

16. Public Packet Data Network (Cont'd)

16.1 Frame Relay Access Service (Cont'd)

16.1.3 Optional Rate Plans (N)

(A) Term Discounts (Cont'd)

If a Term Discount Percentage increase occurs during the term of an existing Term Discount plan, the increased percentage will be applied automatically to the remainder of the current Term Discount period.

At the end of the Term Discount period, the customer may convert to month-to-month service or subscribe to a new Term Discount plan. If the customer does not make a choice by the end of the discount period, the rates will automatically convert to month-to-month service rates.

To be included in a Term Discount plan, all eligible FRAS rate elements must be ordered for the same commitment term (i.e., all 36 months or all 60 months) and with the same service date. When additional capacity is subsequently added, it will be available only on a month-to-month basis unless the discount period of the entire service is upgraded.

As long as the number of FRAS connections included in a Term Discount plan remains constant, customer requests to install and disconnect FRAS connections, including changes affecting different wire centers and/or customer designated premises, will not change the current Term Discount period or the minimum service period, and Discontinuance of Service charges as set forth in (3) following will not apply.

(1) Upgrades in Term Discounts

Services provided under month-to-month rates or Term Discount rates may be upgraded to a Term Discount plan at any time without incurring FRAS nonrecurring charges or discontinuance charges for existing services. The new Term Discount plan must meet or exceed the service term of the plan being upgraded. For example, a service with a 36 month commitment period may be upgraded to a new 36 month or 60 month service period. The monthly rates will be those that are in effect at the time the service is upgraded. A new minimum service period applies to all FRAS that is upgraded. (N)

ACCESS SERVICE

16. Public Packet Data Network (Cont'd)

16.1 Frame Relay Access Service (Cont'd)

16.1.3 Optional Rate Plans (N)

(A) Term Discounts (Cont'd)

(2) Upgrades in Capacity

If the customer chooses to upgrade a service under the Term Discount plan to a higher capacity (e.g., from 56.0 kbps to 64.0 kbps or from 56.0 kbps or 64.0 kbps to 1.544 Mbps), discontinuance charges will not apply, provided all the following conditions are met:

- the customer's order for the disconnect of the existing service and the installation of the new service are received at the same time and specifically reference the application of upgrade in capacity,

- the customer's disconnect order for the existing service must reference the service installation order,

- the new service has a total capacity greater than the total capacity of the service being discontinued and,

- the new Term Discount period meets or exceeds the Term Discount period being discontinued.

A new minimum service period applies to all upgrades. A Frame Relay Access Connection nonrecurring charge for an equivalent capacity of the existing services being upgraded to the higher speed service will not be assessed. FRAC nonrecurring charges will not apply to the upgraded lower speed services placed on the higher speed service if requested at the same time as the upgrade request. Nonrecurring charges will apply for capacity that exceeds the existing equivalent capacity. (N)

ACCESS SERVICE

16. Public Packet Data Network (Cont'd)

16.1 Frame Relay Access Service (Cont'd)

16.1.3 Optional Rate Plans (N)

(A) Term Discounts (Cont'd)

(2) Upgrades in Capacity (Cont'd)

Discontinuance charges will not apply should the customer choose to upgrade either a portion of or the entire FRAS under the Term Discount plan and move the service to a new customer location(s) where service is provided by the Telephone Company.

(3) Discontinuance of Service

If the customer chooses to disconnect all or a portion of the service prior to the expiration of the Term Discount period, discontinuance charges will apply to the portion of the service being discontinued.

Should the customer choose to discontinue a Term Discount plan prior to the completion of the minimum service period, discontinuance charges will apply. Discontinuance charges equal to one-hundred percent of the total undiscounted monthly rates, less any amounts previously paid, will apply for the minimum service period. Additionally, discontinuance charges of fifteen percent of the total undiscounted monthly charges will apply to the remaining portion of the discount service term.

Should the customer choose to discontinue service ordered under a Term Discount plan after the minimum service period but before the completion of the discount period, discontinuance charges will apply. Discontinuance charges of fifteen percent of the total undiscounted monthly charges will apply to the remaining portion of the discount period. For example, a customer has a 1.544 Mbps Frame Relay Access Connection which it chooses to discontinue after 33 months into a 60-month service term. The discontinuance charge would be 0.15 times 27 months times the undiscounted monthly rates for that service. (N)

ACCESS SERVICE

16. Public Packet Data Network (Cont'd)

16.2 Asymmetrical Digital Subscriber Line (ADSL) Service

The Telephone Companies listed below offer Asymmetric Digital Subscriber Line (ADSL) Access Services under the provisions specified in this section as indicated on one or more of the following pricing arrangements: 1) non-discounted month-to-month rates (non-Discount Pricing Arrangement or non-DPA), 2) Term and Volume Plan (TVP) Pricing under Section 16.2.2(E), or 3) Discount Pricing Arrangement (DPA) pricing under Section 16.2.3. (N)

Telephone Company	Non-DPA	Section 16.2.2(E) TVP	Section 16.2.3 DPA
Atlantic Telephone Membership Corporation	X		
Coastal Utilities, Inc.	X		X
Farmers Telephone Cooperative, Inc.	X	X	
Fort Mill Telephone Company	X		
Home Telephone Company	X		
Lancaster Telephone Company	X		
Millington Telephone Company, Inc.	X		
Mt. Horeb Telephone Company	X		
Pineland Telephone Cooperative, Inc.	X		
Rock Hill Telephone Company	X		
Star Telephone Membership Corporation	X	X	

(N)

Certain material previously found on this page now appears on Original Page 16-12.1

ACCESS SERVICE

16. Public Packet Data Network (Cont'd)

16.2 Asymmetrical Digital Subscriber Line (ADSL) Service

16.2.1 General Description

(A) Basic Service Description

(1) Asymmetrical Digital Subscriber Line (ADSL) Service is an access data technology service offered at various downstream (Down) and upstream (Up) speeds. The "Up" speed represents transmission speed in kilobits per second (Kbps), from the point of demarcation at the customer's designated premises to the Telephone Company's ADSL connection point; while the "Down" speed represents transmission speed in Kbps or Mbps from the Telephone Company's ADSL connection point to the point of demarcation at the customer's designated premises. Actual speed may be affected by loop distance and other factors. (T) (M)

(2) The ADSL Service may require a splitter at both the customer's designated premises and the Telephone Company's serving wire center to split the traffic between data and voice. The customer is responsible for providing and maintaining the splitter at the customer designated premises. (T) (M)

(3) ADSL Access Service is available as two service options, i.e., ADSL Voice-Data and ADSL Data-Only. (N)

(a) The ADSL Voice-Data option provides transmission of data signals at peak data transmission speeds of 512 kbps upstream and 1.544 Mbps downstream using the Telephone Company's existing local exchange service line. This option may be used for simultaneous voice and data communications.

(b) The ADSL Data-Only option provides transmission of data signals at peak transmission speeds of 512 kbps upstream and 1.544 Mbps downstream using the Telephone Company's existing local exchange copper facilities. This option does not provide the ability to transmit voice communications. (N)

(B) Service Provisioning (M)

ADSL Service is provisioned over existing Telephone Company copper facilities and transported to the Telephone Company's backbone network. ADSL Service provides a connection from the customer's designated location (CDL) to the ADSL connection point. (M)

Certain material currently found on this page previously appeared on 1st Revised Page 16-12.

ACCESS SERVICE

16. Public Packet Data Network (Cont'd)

16.2 Asymmetrical Digital Subscriber Line (ADSL) Service (Cont'd)

16.2.1 General Description (Cont'd)

(B) Service Provisioning (Cont'd)

Access from the Telephone Company's ADSL connection point will be provided via High Capacity Special Access Service and/or Frame Relay Access Service, where facilities permit. High Capacity Special Access Service is available in Section 7.10 preceding. Frame Relay Access Service is available in Section 16.1 preceding. If a customer utilizes Special Access Service or Frame Relay Access Service pursuant to sections 7.10 or 16.1 preceding, the associated rates and charges for such facilities shall apply in addition to the rates and charges associated with the ADSL rate element. (C) (C) (C) (C)

The Telephone Company will qualify the local exchange service loop between the customer's designated premises and the serving wire center. The purpose of qualification is to determine the availability and suitability of existing Telephone Company facilities to provide the service, and to determine if Loop Conditioning is required to support ADSL Service. The Telephone Company will not provision this service on facilities which are not suitable for ADSL.

The Telephone Company does not undertake to originate data, but offers the use of its ADSL service, where available, to customers for the purpose of transporting data originated by the customer or a third party.

All customers will be served from the nearest suitably equipped end office. Information pertaining to end offices equipped to provide ADSL Service is set forth in the National Exchange Carrier Association, Inc. (NECA) Tariff F.C.C. No. 4. ADSL Service will be provided subject to the availability and limitations of the Telephone Company wire centers and outside plant facilities. ADSL service is only available where technical capabilities permit such facility distance and type of physical plant.

(C) Responsibility of the Telephone Company

The Telephone Company will provision and maintain ADSL Service for the customer up to and including the Network Interface Device (NID) or the protector. The Telephone Company will advise the customer of the customer premises equipment (CPE) necessary to support ADSL Service that the customer will need to purchase.

ACCESS SERVICE

16. Public Packet Data Network (Cont'd)

16.2 Asymmetrical Digital Subscriber Line (ADSL) Service (Cont'd)

16.2.1 General Description (Cont'd)

(D) Rights of The Telephone Company

ADSL Access Service will be provided over existing Telephone Company local exchange service lines. Rates and regulations for ADSL Access Service are in addition to any rates and regulations that apply for the associated local exchange service line provided under the terms and conditions in the Telephone Company's general and/or local exchange service tariffs. The Telephone Company will automatically disconnect ADSL Access Service when the associated local exchange service line is disconnected for any reason. (N) (N)

The Telephone Company will not provision ADSL service if the Telephone Company has reasonably determined that (a) it is not technically feasible over existing facilities or (b) it will cause interference problems within the Telephone Company's network or other facilities.

During the Telephone Company's network maintenance and software update period, it may be necessary to temporarily place the ADSL central office equipment out of service. The Telephone Company reserves the right to temporarily interrupt ADSL Service at other times in emergency situations.

(E) Responsibility of the Customer

The customer is responsible for providing the Telephone Company with the necessary information to provision ADSL Access Service (e.g., customer name, telephone number and premises address; billing name and address when different from the customer name and premise address; its Internet Protocol (IP) address; and the contact name and telephone number of the telecommunications service provider with which the customer's ADSL Access Service will interconnect). (N) (N)

The customer is responsible for providing compatible customer premises equipment (CPE) that is used for connection to ADSL Service.

The ISP/NSP customer is responsible for providing the Telephone Company with the necessary information (e.g., Data Link Connection Identifier(s), and/or Internet Protocol) to provision the ADSL Service.

The ISP/NSP customer will obtain the appropriate authorization to allow the Telephone Company to provision ADSL Service over the customer's end user's existing telephone exchange service line. (C) (C) (C) (C)

Where required, the ISP/NSP customer will be responsible for obtaining permission from its subscriber(s) for the Telephone Company's agents or employees to enter the customer's Designated premises at a mutually agreed upon time for the purpose of installing, inspecting, repairing, or upon termination of the service, removing the service components of the Telephone Company.

The ISP/NSP customer will deal directly with its end user customers with respect to all matters pertaining to the service provided, including marketing, sales, ordering, installation, maintenance, trouble reporting, repair, billing and collections. (N) (N)

ACCESS SERVICE

16. Public Packet Data Network (Cont'd)

16.2 Asymmetrical Digital Subscriber Line (ADSL) Service (Cont'd)

16.2.2 Rate Regulations

(A) Rate Elements

There are three types of rates and charges applicable to ADSL Service. These are a monthly rate, a nonrecurring charge and a network reconfiguration charge. (C) (N) (N)

The monthly rate applies each month or fraction thereof for each local exchange service line equipped with ADSL Service.

A nonrecurring charge applies per local exchange service line for the installation of ADSL Service.

A DSL Network Reconfiguration Charge applies when the ADSL Access Service customer's telecommunications service provider requests the Telephone Company to modify the Telephone Company's network to: 1) accommodate a change in the ADSL Access Service customer's existing IP address or 2) limit the data speed delivered over the customer's existing ADSL Access Service line. A nonrecurring charge applies for each request per ADSL Access Service line. The Telephone Company will bill the DSL Network Reconfiguration Charge to the ADSL Access Service customer's telecommunications service provider. (N)

All changes to existing ADSL Access Service (including but not limited to change of telecommunications service provider), other than changes involving DSL network reconfigurations and administrative activities, will be treated as a discontinuance of the existing service and an installation of a new service. A nonrecurring installation charge will apply per ADSL Access Service line for this work activity. (N)

Rates and charges for ADSL Service are set forth in 17.4.8 following.

ACCESS SERVICE

16. Public Packet Data Network (Cont'd)

16.2 Asymmetrical Digital Subscriber Line (ADSL) Service (Cont'd)

16.2.2 Rate Regulations (Cont'd)

(B) Rate Application

ADSL Service is based on differing volume levels of ADSL connections per Section 17.4.8, following. (C) (C)

The rates applicable to ADSL Service provided under an ADSL Term and Volume Plan (ADSL-TVP) arrangement are specified in 17.4.8, following. (C)

The following diagram depicts a typical ADSL Service configuration:

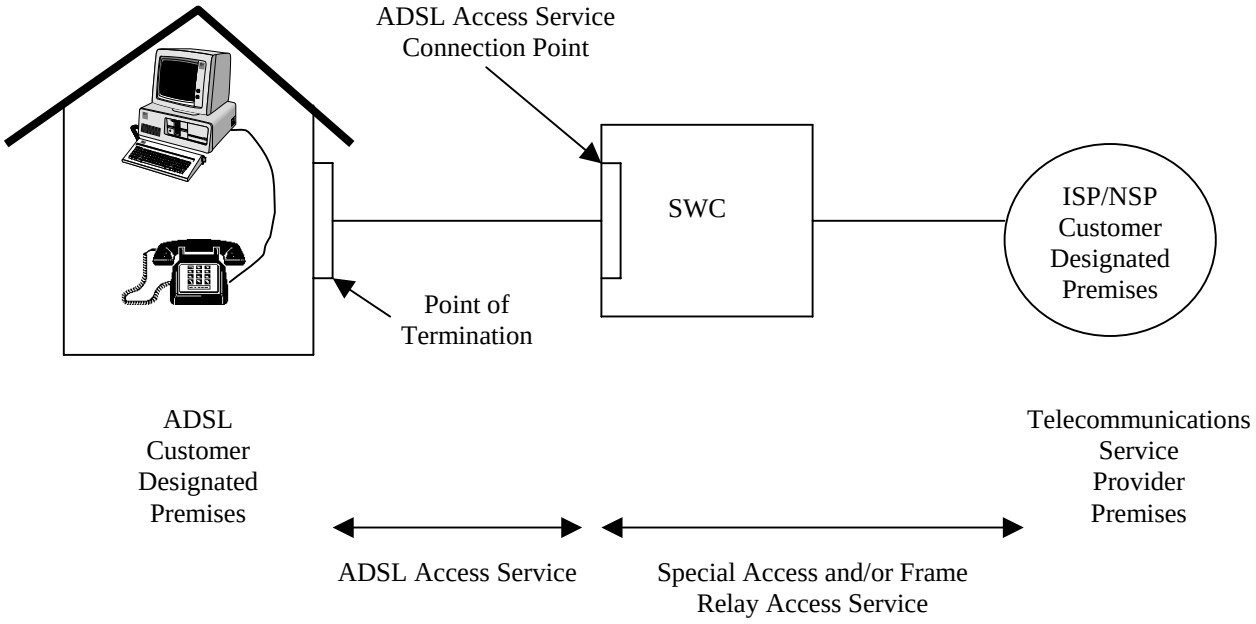

(C) Minimum Period

The minimum period for which ADSL Access Service is provided to a customer and for which charges are applicable is one month.

ACCESS SERVICE

16. Public Packet Data Network (Cont'd)

16.2 Asymmetrical Digital Subscriber Line (ADSL) Service (Cont'd)

16.2.2 Rate Regulations (Cont'd)

(D) Moves

A move involves a change in the physical location of one of the following:

- The Point of Termination at the customer designated premises
- The customer's designated premises

The provisions for moves of ADSL Access Service are the same as those described in Section 7.2.3, preceding, except that an Access Order Charge will not apply.

(E) Term and Volume Plan (TVP)

(1) Description

The terms and conditions specified herein are applicable to ADSL Service and are in addition to other regulations as specified in this tariff.

The ADSL Term and Volume Plan (TVP) will allow customers discounted access rates based upon the volume and term commitment. Rates will be based upon the TVP selected by the customer.

Term plans of one (1), two (2) and three (3) years may be available to all customers at applicable rates set forth in the tariff regardless of when the subscription is made for a ADSL Service TVP arrangement. The customer must designate on the order the type of payment plan selected. (C)

The minimum volume commitment of the TVP selected must be met within twelve (12) months after the TVP is initiated.

ACCESS SERVICE

16. Public Packet Data Network (Cont'd)

16.2 Asymmetrical Digital Subscriber Line (ADSL) Service (Cont'd) (N)

16.2.2 Rate Regulations (Cont'd)

(E) Term and Volume Plan (TVP) (Cont'd)

(2) Rate Application

Upon expiration of a TVP period, the customer may choose a new TVP period, convert to month-to-month or terminate service. The month-to-month rates will be those rates that are in effect at the time of conversion. If the customer fails to make a choice by the end of the TVP period, the ADSL Service will continue billing at the existing term and volume commitment level rates and a new TVP period will begin based on previously effective term and volume commitment. All terms and conditions, including Termination Liabilities will apply to the new TVP period.

Conversion to a month-to-month or different TVP period will require the customer to submit a change order. Conversion of existing TVP service to a different TVP period will be allowed without application of any nonrecurring charges.

(3) Changes in Length of TVP Period

The customer may elect to convert to a new TVP period subject to the following conditions:

(a) Credit will not be given toward the new payment period for payments made under the original TVP arrangement.

(b) Nonrecurring charges will not be reapplied for existing service(s).

(c) If the new TVP period is shorter in length than the time remaining under the existing TVP, the change to the new TVP period constitutes a discontinuance of the existing TVP service and termination liability charges apply. (N)

ACCESS SERVICE

16. Public Packet Data Network (Cont'd)

16.2 Asymmetrical Digital Subscriber Line (ADSL) Service (Cont'd)

16.2.2 Rate Regulations (Cont'd)

(E) Term and Volume Plan (TVP) (Cont'd)

(4) Rate Changes

The customer may terminate the TVP without penalty or liability should the rates increase during the term of the existing TVP, with the exception of rate changes that may occur as a result of FCC presubscription for rate increases.

(5) Annual Review

Each customer's TVP will be reviewed annually. The customer will be notified as to the status of the TVP if the in-service quantity of ADSL Services falls below the minimum volume commitment. An allowance of up to 3% will be considered as still having met the volume commitment. Where the customer has less than the volume commitment quantity for a specified discount, charges will be assessed.

If the total number of ADSL Services in service qualifies the customer for a different TVP rate, the customer will have the option of increasing the commitment quantity for the remainder of the plan.

(6) TVP Conditions

After enrolling in the plan, the customer may delete or add ADSL Services rated at the specified term period/threshold level rate at any time during the plan. (D)

(D)

ACCESS SERVICE

16. Public Packet Data Network (Cont'd)

16.2 Asymmetrical Digital Subscriber Line (ADSL) Service (Cont'd)

16.2.2 Rate Regulations (Cont'd)

(E) Term and Volume Plan (TVP) (Cont'd)

(7) Shortfall Charges for Failing To Meet Commitment

At the annual review, if the total volume in service does not meet the volume commitment, a payment equal to the difference between the TVP rate and the highest rate that would have been charged for services not under the TVP plan plus 10% will be assessed. The payment will be calculated using the prorated ADSL Service aggregation quantity at the time of the review. The customer may choose to increase the volume commitment within 30 days after enrollment to the TVP and continue the TVP arrangement or choose to be billed on a going forward basis under either a different TVP or under the month-to-month rates. If after 30 days, the TVP volume levels are not met, the TVP will be automatically changed to the standard month-to-month rates.

(8) Termination Liability

When a TVP service is discontinued prior to the end of the commitment period, termination liability charges will apply, as set forth below, based on the remainder of the TVP period in effect at the time of disconnect.

One Year TVP – Prorated payment based on the ADSL Service Level Package mix times the number of remaining months of the first year's recurring charges.

Two Year TVP – Prorated payment based on the ADSL Service Level Package mix times the number of remaining months of the first and second year's recurring charges. (N)

(N)

Three Year TVP – Prorated payment based on the ADSL Service Level Package mix times the number of remaining months of the first, second and third year's recurring charges.

ACCESS SERVICE

16. Public Packet Data Network (Cont'd)

16.2 Asymmetrical Digital Subscriber Line (ADSL) Service (Cont'd)

16.2.3 ADSL Service Discount Pricing Arrangement (N)

(A) General

The telecommunications services offered under an ADSL Access Services Discount Pricing Arrangement (DPA) are provided at wholesale rates to the customer under the conditions listed below.

(1) The customer purchases ADSL Service as described in Section 16.2.1, preceding, for the purpose of combining these telecommunications services with its own information service(s) to create a new retail service for sale to its end user customer(s).

(2) In addition to the obligations specified in Section 16.2.1(E), preceding, the customer assumes the following obligations:

(a) The customer will deal directly with its end user customers with respect to all matters pertaining to the service provided, including marketing, sales, ordering, installation, maintenance, trouble reporting, repair, billing and collections. The customer will not direct its end users to contact the Telephone Company for any aspect of the service the customer provides.

(b) The customer will submit orders for ADSL Access Service to the Telephone Company in a format and manner designated by the Telephone Company.

(c) The customer will obtain the appropriate authorization to allow the Telephone Company to provision ADSL Access Service over the customer's end user's existing telephone exchange service line. (N)

ACCESS SERVICE

16. Public Packet Data Network (Cont'd)

16.2 Asymmetrical Digital Subscriber Line (ADSL) Service (Cont'd)

16.2.3 ADSL Service Discount Pricing Arrangement (Cont'd) (N)

(A) General (Cont'd)

When the customer purchases ADSL Service under the ADSL Service DPA, the rates and charges specified for a Telephone Company for the ADSL Service DPA will apply. The ADSL Service DPA is only available from those Telephone Companies with rates indicated for ADSL Service DPA in Section 17.4.8 following.

Services provided under the ADSL Service DPA are available under a Monthly Plan at the rates and charges specified in Section 17.4.8, following, or under an ADSL Service DPA Term Plan described in Section 16.2.3(B) following, at the rates and charges specified in Section 17.4.8, following.)

A monthly charge applies for each ADSL Service line covered under the DPA. A nonrecurring charge applies for the installation of each ADSL Service line under the DPA. A DSL Network Reconfiguration Charge as described at Section 16.2.2(a) preceding would apply for each requested reconfiguration for each ADSL Service line covered under the DPA.

The Telephone Company will bill the customer an Access Order Charge, per order, to convert an in-service ADSL Service line originally purchased under the provisions specified in Section 16.2.2, preceding, to the DSL Access Services DPA, provided the customer obtains written authorization from its end user authorizing such conversion, where necessary. Per-line nonrecurring charges specified in Section 17.4.8, following, do not apply to conversion of in-service ADSL lines to a DPA.

(N)

ACCESS SERVICE

16. Public Packet Data Network (Cont'd)

16.2 Asymmetrical Digital Subscriber Line (ADSL) Service (Cont'd)

16.2.3 ADSL Service Discount Pricing Arrangement (Cont'd)

(B) ADSL Service DPA Term Plan

(1) Description

The ADSL Service DPA Term Plan provides the customer with reduced rates based on the length of the customer's term commitment and its selected pricing option. The ADSL Service DPA Term Plan is available for the terms and pricing options (C)
specified in Section 17.4.8. The Telephone Company will (C)
establish an ADSL Service DPA Term Plan for each Serving Wire Center (SWC) based on the customer's order notifying the Telephone Company which ADSL-equipped SWC(s) the customer wants included in the plan(s) and its selected term commitment and pricing option for each SWC. An Access Order Charge applies for each order to establish the initial ADSL Service DPA Term Plan(s).

When the customer subscribes to an ADSL Service DPA Term Plan, all in-service ADSL Access Service lines provided out of and subsequently installed at the included SWC will be billed the rates and charges specified in Section 17.4.8, following, for the length of the term commitment. In addition to the applicable ADSL Line Charges, the customer will be billed a recurring monthly ADSL Service DPA Term Plan Charge for each SWC included in an ADSL Service DPA Term Plan, as specified in Section 17.4.8, following, based on its selected pricing option.

If the Telephone Company decreases the rates specified in Section 17.4.8, following, during the term of a commitment period, the decreased rates will automatically be applied for the remainder of the current commitment period.

ACCESS SERVICE

16. Public Packet Data Network (Cont'd)

16.2 Asymmetrical Digital Subscriber Line (ADSL) Service (Cont'd)

16.2.3 ADSL Service Discount Pricing Arrangement (Cont'd) (N)

(B) ADSL Service DPA Term Plan (Cont'd)

(1) Description (Cont'd)

At the end of the ADSL Service DPA Term Plan, the customer may elect to establish a new ADSL Service DPA Term Plan commitment, convert to the rates available under the Monthly Plan, or discontinue service. If the customer does not make an election by the end of the ADSL Service DPA Term Plan, the rates for all ADSL Service lines will automatically be converted to the rates available under the Monthly Plan specified in Section 17.4.8, following. An Access Order Charge will not apply to any election made by the customer at the end of the ADSL Service DPA Term Plan.

An ADSL Service DPA Term Plan is subject to payment for early termination as described in Section 16.2.3(B)(4), following.

(2) Upgrades in ADSL Service DPA Term Plan

A customer may terminate an ADSL Service DPA Term Plan without the application of a termination liability charge when the customer replaces its original ADSL Service DPA Term Plan commitment with a new ADSL Service DPA Term Plan commitment provided the length and pricing option of the new ADSL Service DPA Term Plan commitment is equal to or greater than the length and pricing option of the original ADSL Service DPA Term Plan commitment. An Access Order Charge will not apply when the customer replaces an existing ADSL Service DPA Term Plan with a new ADSL Service DPA Term Plan commitment under this provision. (N)

ACCESS SERVICE

16. Public Packet Data Network (Cont'd)

16.2 Asymmetrical Digital Subscriber Line (ADSL) Service (Cont'd)

16.2.3 ADSL Service Discount Pricing Arrangement (Cont'd) (N)

(B) ADSL Service DPA Term Plan (Cont'd)

3) Termination without Liability

A customer may terminate an ADSL Service DPA Term Plan without the application of a termination liability charge if the Telephone Company increases the ADSL Service DPA Term Plan monthly rates described in Section 17.4.8, following, during the term of the existing commitment. The customer has 90 days following such rate increase to notify the Telephone Company in writing of its intent to terminate its ADSL Service DPA Term Plan under this section; otherwise, the increased rates will apply for the remainder of the commitment period.

(4) Termination with Liability

If the customer elects to terminate its ADSL Service DPA Term Plan(s) prior to the end of the commitment period for any reason other than specified in (2) or (3), preceding, a termination liability charge will apply. For each ADSL Service DPA Term Plan terminated prior to the end of the commitment period, the Telephone Company will bill the customer a charge equal to the monthly ADSL Service DPA Term Plan Charge for its selected pricing option as specified in Section 17.4.8, following, multiplied by the number of months remaining in the commitment period.

ADSL Service DPA Monthly Plan rates as described in Section 17.4.8, following, will apply to all in-service ADSL Lines following the early termination of an ADSL Service DPA Term Plan. (N)

ACCESS SERVICE

16. Public Packet Data Network (Cont'd)

16.3 Symmetrical Digital Subscriber Line Access Service

Telephone Companies providing SDSL Service under this Section are indicated in the following table. (N)

Telephone Company
Atlantic Telephone Membership Corporation
Coastal Utilities, Inc.

(N)

16.3.1 General

Symmetrical Digital Subscriber Line (SDSL) Access Service provides the customer the ability to transmit data to (upstream rate) and receive data from (downstream rate) a DSL Access Service Connection Point at the same speed using the Telephone Company's existing local exchange copper facilities. A DSL Access Service Connection Point is an interconnection point designated by the Telephone Company that aggregates data traffic from and to Telephone Company SDSL-equipped Serving Wire Centers (SWCs). The DSL Access Service Connection Point may be located within the operating territory of the Telephone Company or in the operating territory of another telephone company, provided both telephone companies agree to such an arrangement.

At the DSL Access Service Connection Point, the customer's SDSL Access Service must be connected to a telecommunications service provider's customer designated premise using the Telephone Company's Special Access Services when the Connection Point is located within the Telephone Company's operating territory. When the Connection Point is located in the operating territory of another telephone company, the customer's SDSL Access Service must be connected to a telecommunications service provider's customer designated premises using equivalent access services provided by that telephone company.

SDSL Access Service is available as two service options, i.e., SDSL Voice-Data and SDSL Data-Only.

(A) The SDSL Voice-Data option provides transmission of data signals at a peak data transmission speed of up to 1.544 Mbps using the Telephone Company's existing local exchange service line. This option may be used for simultaneous voice and data communications.

(B) The SDSL Data-Only option provides transmission of data signals at a peak transmission speed of up to 1.544 Mbps using the Telephone Company's existing local exchange copper facilities. This option does not provide the ability to transmit voice communications.

ACCESS SERVICE

16. Public Packet Data Network (Cont'd)

16.3 Symmetrical Digital Subscriber Line Access Service (Cont'd) (N)

16.3.1 General (Cont'd)

A generic view of how SDSL Access Service would be interconnected with a telecommunications service provider's network is depicted in the figure following. In this example, the customer's SDSL-equipped serving wire center is designated as a DSL Access Service Connection Point. The customer orders SDSL Access Service pursuant to the provisions specified in this section. The SDSL Access Service customer's telecommunications service provider orders Special Access Service pursuant to the provisions specified in Section 7.10 preceding to connect its customer designated premises to the DSL Access Service Connection Point.

SDSL ACCESS SERVICE

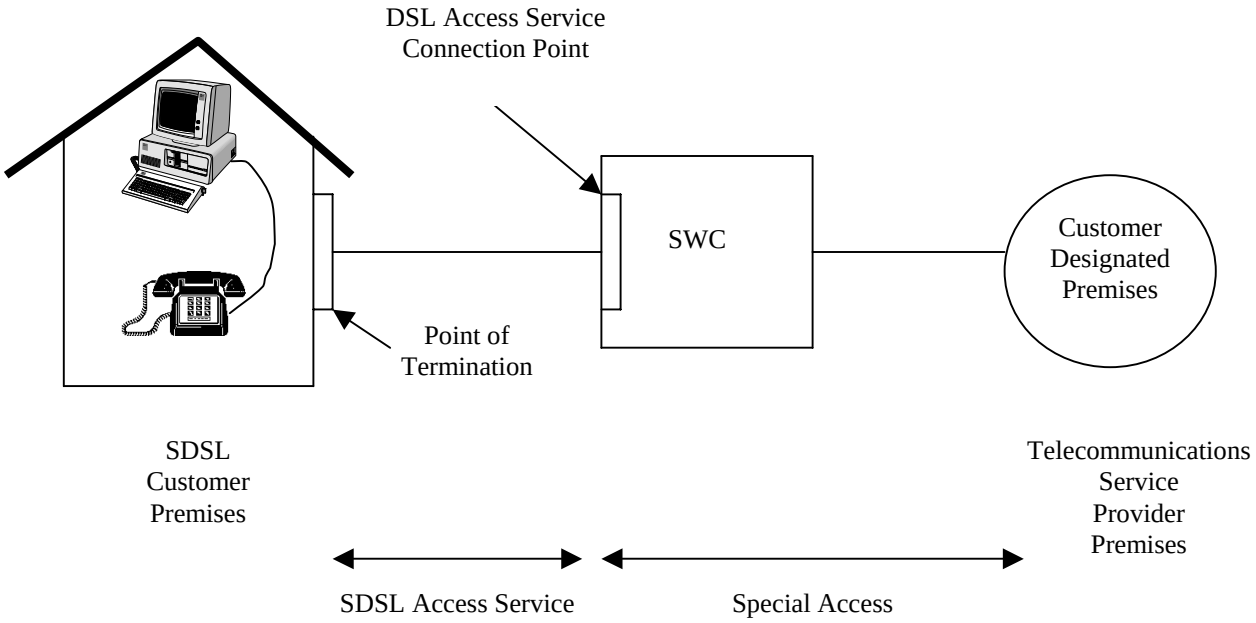

(N)

ACCESS SERVICE

16. Public Packet Data Network (Cont'd)

16.3 Symmetrical Digital Subscriber Line Access Service (Cont'd) (N)

16.3.2 Limitations

SDSL Access Service is available as two service options as described above. Peak speeds are not guaranteed by the Telephone Company due to factors that may affect the actual speeds delivered, including the SDSL Access Service customer's distance from the Telephone Company Serving Wire Center, condition of the existing copper facilities, and limitations in the telecommunications service provider's network design.

The Telephone Company does not provide customer premises equipment (CPE) in conjunction with the SDSL Access Service offering.

SDSL Access Service may not be used in conjunction with multi-point Special Access Service configurations as described in 7.1.3, preceding.

SDSL Access Service will be furnished where suitable facilities exist as determined by the Telephone Company. The Telephone Company will identify its SDSL-equipped Serving Wire Centers and DSL Access Service Connection Points in the NATIONAL EXCHANGE CARRIER ASSOCIATION, INC. Tariff F.C.C. No. 4.

SDSL Access Service will be provided over existing Telephone Company local exchange service facilities. When the customer orders the SDSL Voice-Data option, the rates and regulations for SDSL Access Service are in addition to any rates and regulations that apply for the associated local exchange service line provided under the terms and conditions in the Telephone Company's general and/or local exchange service tariffs. The Telephone Company will automatically disconnect the SDSL Access Service Voice-Data option when the associated local exchange service line is disconnected for any reason.

Rates and regulations for Special Access Service will apply for the access service(s) provided between the telecommunications service provider's customer designated premises and the DSL Access Service Connection Point, as described in Section 7.10 preceding. (N)

ACCESS SERVICE

16. Public Packet Data Network (Cont'd)

16.3 Symmetrical Digital Subscriber Line Access Service (Cont'd)

16.3.3 Undertaking of the Telephone Company

The Telephone Company will provide SDSL Access Service at the rates and charges set forth in 17.4 as follows:

(A) The Telephone Company will determine if the associated local exchange service line or copper facilities are suitable for use with the SDSL Access Service option ordered by the customer. Service will not be provided on facilities that the Telephone Company determines are not suitable for SDSL Access Service or on facilities that produce interference with other services provided by the Telephone Company.

(B) The Telephone Company, after determining if the facilities are suitable for SDSL Access Service, will notify the customer if the customer's CPE is compatible with the equipment deployed in the Telephone Company's Serving Wire Center and if any additional CPE is necessary to support SDSL Access Service.

(C) The Telephone Company will provision and maintain SDSL Access Service from the DSL Connection Point to the Point of Termination at the SDSL Access Service customer's premises.

16.3.4 Obligations of the Customer

In addition to the regulations described in other sections of this tariff, the following provisions apply to SDSL Access Service:

(A) The customer is responsible for providing the Telephone Company with the necessary information to provision SDSL Access Service (e.g., customer name, telephone number and premises address; billing name and address when different from the customer name and premises address; customer contact name and telephone number and the contact name and telephone number of the telecommunications service provider with which the customer's SDSL Access Service will interconnect).

(B) The customer is responsible for providing and maintaining all required customer provided equipment (CPE), which is compatible with SDSL Access Service.

(C) The ISP/NSP customer will obtain the appropriate authorization to allow the Telephone Company to provision SDSL Voice-Data Access Service over the customer's end user's existing telephone exchange service line. (N)

(D) The ISP/NSP customer will deal directly with its end user customers with respect to all matters pertaining to the service provided, including marketing, sales, ordering, installation, maintenance, trouble reporting, repair, billing and collections. (N)

ACCESS SERVICE

16. Public Packet Data Network (Cont'd)

16.3 Symmetrical Digital Subscriber Line Access Service (Cont'd) (N)

16.3.5 Rate Regulations

This section contains the regulations governing the rates and charges that apply for SDSL Access Service. Regulations governing the rates and charges for the Special Access Services provided under tariff used in conjunction with SDSL Access Service are as specified in Section 7.10 preceding.

(A) Minimum Period

The minimum period for which SDSL Access Service is provided to a customer and for which charges are applicable is one month.

(B) Moves

A move involves a change in the physical location of one of the following:

- The Point of Termination at the SDSL Access Service customer designated premises

- The SDSL Access Service customer designated premises

The provisions for moves of SDSL Access Service are the same as those described in 7.2.3, preceding, except that an Access Order Charge will not apply to move orders for the SDSL Access Service Voice-Data option.

(C) Temporary Suspension of Service

When the associated local exchange service line over which the SDSL Voice-Data option is provided is temporarily suspended, the SDSL Access Service and one-half of the SDSL Line Charge monthly rate will be temporarily suspended for the time period that the associated local exchange service is suspended. (N)

ACCESS SERVICE

16. Public Packet Data Network (Cont'd)

16.3 Symmetrical Digital Subscriber Line Access Service (Cont'd)

16.3.5 Rate Regulations (Cont'd)

(D) Rate Categories

There are three types of rates and charges applicable to SDSL Access Service. These are a monthly rate, a nonrecurring charge and a network reconfiguration charge. (C) (N) (N)

The monthly rate applies each month or fraction thereof for each SDSL Voice-Data option and SDSL Data-Only option ordered by the customer.

A nonrecurring charge applies for each SDSL Voice-Data and SDSL Data-Only option ordered by the customer for the installation of SDSL Access Service.

A DSL Network Reconfiguration Charge applies when the SDSL Access Service customer's telecommunications service provider requests the Telephone Company to modify the Telephone Company's network to: 1) accommodate a change in the SDSL Access Service customer's existing IP address or 2) limit the data speed delivered over the customer's existing SDSL Access Service line. A nonrecurring charge applies for each request per SDSL Access Service line. The Telephone Company will bill the DSL Network Reconfiguration Charge to the SDSL Access Service customer's telecommunications service provider. (N)

All changes to existing SDSL Access Service (including but not limited to change of service option, change of service level speed and/or change of telecommunications service provider), other than changes involving DSL network reconfigurations and administrative activities, will be treated as a discontinuance of the existing service and an installation of a new service. A nonrecurring installation charge will apply per SDSL Access Service line for this work activity. (N)

Rates and charges for SDSL Access Service are as set forth in 17.4.8 following.

ACCESS SERVICE

(N)

16. Public Packet Data Network (Cont'd)

16.4 Telecommunications Service Provider Service Access (TSPSA)

16.4.1 General Description

Telecommunications Service Provider Service Access (TSPSA) is a fast packet, cell based service technology which can support applications requiring high bandwidth, high performance transport and switching. TSPSA allow customers who have requirements for high speed, inter-premises connectivity to interconnect their multiple locations via a Network Gateway Interface (NGI) or a User-Network Interface (UNI) element from the customer's premises to the Telephone Company's serving wire center; or via a Network Link (NL) element with UNI for interconnection between contiguous exchanges within the Telephone Company's serving area.

TSPSA operates using standard cell relay signaling protocol. TSPSA provides high-speed, low-delay networking capabilities suited for bandwidth intensive data, voice or video business applications that require near-real-time communication support among multiple locations.

Customers may expand the capabilities of TSPSA by ordering Inverse Multiplexing for User Network Interface (IMA UNI). IMA UNI allows customers to send multiple streams of traffic requiring bandwidth greater than a 1.53 Mbps, but less than 44.7 Mbps to the ATM network. The customer must provide an access device capable of the IMA function. This CPE must be located at the customer's premises.

(N)

ACCESS SERVICE

16. Public Packet Data Network (Cont'd) (N)

16.4 Telecommunications Service Provider Service Access (TSPSA) (Cont'd)

16.4.2 Service Provisioning

(A) Provisioning of this service is subject to the availability and operational limitations of the Telephone Company's equipment and associated facilities. Provisioning of this service is limited to locations within the Telephone Company's service area.

(B) TSPSA requires the use of CPE that functions as a multiplexer, bridge or router. The CPE must be compatible with the Telephone Company's equipment and facilities and must conform to industry standards and specifications set forth in the Telephone Company's technical publications (TPs) 76625, 76839 and 76700.

(C) The Telephone Company will provision TSPSA up to and including the network interface located on the customer's premises. The placement of the network interface shall be located in a manner consistent with federal and state regulatory requirements. This location will be at each customer's premises unless specified otherwise and agreed to by the Telephone Company.

(D) When a customer requires the modification of standard service components not otherwise provided in this tariff, the modification may be furnished at the option of the Telephone Company as specified in Section 12, Specialized Service or Arrangements.

(E) The customer shall be responsible for obtaining permission for the Telephone Company's agents or employees to enter the customer's premises at a mutually agreed upon time for the purpose of installing, inspecting, repairing or, upon termination of the service, removing the equipment of the Telephone Company.

(F) Network equipment installed by the Telephone Company on the customer's premises shall remain the property of the Telephone Company. The customer or user may not rearrange, disconnect, remove, attempt to repair, remote test or interface with any network equipment installed by the Telephone Company without the prior written consent of the Telephone Company. (N)

ACCESS SERVICE

16. Public Packet Data Network (Cont'd) (N)

16.4 Telecommunications Service Provider Service Access (TSPSA) (Cont'd)

16.4.2 Service Provisioning (Cont'd)

(G) When the TSPSA is used in connection with CPE, the operating characteristics of such CPE must not interfere with the Telephone Company's network. CPE must not:

(1) endanger the safety of the Telephone Company's employees or the public;

(2) damage, harm, require change in or alteration of the equipment or other services of the Telephone Company;

(3) or interfere with the proper operation of the Telephone Company's equipment.

Upon notice from the Telephone Company that the equipment provided by the customer or user is causing, or is likely to cause, such hazard or interference, the customer shall take such steps as shall be necessary to remove or prevent such hazard or interference.

(H) The services provided under this tariff are provided over such routes and facilities as the Telephone Company may elect. Requests for special facilities or routing will be provided in accordance with Section 11 of this tariff. (N)

ACCESS SERVICE

16. Public Packet Data Network (Cont'd) (N)

16.4 Telecommunications Service Provider Service Access (TSPSA) (Cont'd)

16.4.3 Ordering Specifications and Provisions

(A) The customer will access the TSPSA network, where facilities exist, via a minimum of one NGI, UNI, or NL, for each customer premises or network end point as detailed below:

(1) NGI is the point of interconnection between the Telephone Company's communications facilities and the ISP/NSP customer. The NGI is provided using standard cell relay User-Network Interface signaling protocol. The NGI includes the port access only into the Telephone Company's TSPSA network.

The customer must select one of the following interfaces:

- DS1 NGI is available at a bandwidth of 1.5 Mbps;
- DS3 NGI is available at a bandwidth of 40 Mbps; and
- OC3 NGI is available at a bandwidth of 148 Mbps.

In addition to the NGI, a DS1, DS3 or OC3 facility, where facilities exist and are tariffed, must be ordered from Section 7 (Special Access Service).

(2) UNI – the point of interconnection between the Telephone Company's communications facilities and the CPE. The UNI is provided using standard cell relay User-Network Interface signaling protocol. The UNI includes the facility and port access into the Telephone Company's network.

The customer must select one of the following interfaces and applicable bandwidths for each UNI:

- 1.53 Mbps UNI is available in bandwidths to 1.5 Mbps;
- 44.7 Mbps UNI is available in bandwidths up to 40 Mbps; and
- 155.5 Mbps UNI is available in bandwidths up to 144 Mbps.

(3) A Network Link (NL) is an optional element that may be purchased for an additional charge to establish a dedicated link between the Telephone Company's facilities located in contiguous exchanges. NL service is available at 1.53 Mbps only and cannot be purchased without an associated UNI. (N)

ACCESS SERVICE

16. Public Packet Data Network (Cont'd) (N)

16.4 Telecommunications Service Provider Service Access (TSPSA) (Cont'd)

16.4.3 Ordering Specifications and Provisions (Cont'd)

(B) The Virtual Channel Connections (VCC), and Virtual Path Connections (VPC) define paths across the Telephone Company's TSPSA network. The customer must indicate the VCC/VPC bandwidth, designate the connection and select the preferred bit rate enforcement (CBR or UBR) when ordering.

(1) Each VCC/VPC consumes a portion of an NGI or UNI interface bandwidth. The following VCC/VPC bandwidth selections are available for the TSPSA:

- 1.53 Mbps available in increments of 64 Kbps up to 1500 Kbps,
- 44.736 Mbps available in increments of 1 Mbps up to 40 Mbps, and
- 155.5 Mbps available in increments of 1 Mbps up to 148 Mbps.
- VCC is a logical connection that exists between one TSPSA switch port and another TSPSA switch port.
- VPC is a group of logical connections that exists between one TSPSA switch port and another TSPSA switch port. A VPC connection typically is used to route multiple, customer-defined VCCs as a group. It is the customer's responsibility to configure and maintain the individual VCCs within a VPC connection.

(2) The Telephone Company will provision bit rate enforcement on each VCC/VPC as selected by the customer. A VCC/VPC may be designated as Constant Bit Rate (CBR) or Unspecified Bit Rate (UBR):

- CBR supports applications that are delay sensitive, such as voice and some types of video. CBR is offered as a premium service for an additional charge as set forth in 17.4.8.2 Monthly Rates and Nonrecurring Charges following.
- UBR supports applications that generate bursty and time-varying traffic. UBR is included in the basic TSPSA, where facilities exist. (N)

ACCESS SERVICE

16. Public Packet Data Network (Cont'd) (N)

16.4 Telecommunications Service Provider Service Access (TSPSA) (Cont'd)

16.4.3 Ordering Specifications and Provisions (Cont'd)

(C) Inverse Multiplexing for User Network Interface (IMA UNI)

The IMA UNI enables the aggregation of various speed, multiple traffic streams, conversion to ATM cells and distribution across multiple DS1s. IMA UNI must be provisioned over copper DS1s and includes the port access.

The customer must specify the speed for the IMA UNI. IMA UNI is available at the following speeds: 3 Mbps, 4.5 Mpbs, 6 Mbps and 12 Mbps.

(D) Inverse Multiplexing for Network Link (IMA NL)

The IMA NL enables the aggregation of various speeds, multiple traffic streams, conversion to cell relay cells and distribution across multiple DSIs. IMA NL includes port access and is available at the following speeds: 3 Mbps, 4.5 Mbps, 6 Mbps, and 12 Mbps. The customer must specify the desired speed. (N)

ACCESS SERVICE

16. Public Packet Data Network (Cont'd) (N)

16.4 Telecommunications Service Provider Service Access (TSPSA) (Cont'd)

16.4.4 Limitations

(A) The Telephone Company does not undertake to originate data, but offers the use of its service elements, where facilities exist, to customers for the purpose of transporting customer originated data.

(B) The responsibility of the Telephone Company shall be limited to furnishing the TSPSA network. Subject to this responsibility, the Telephone Company shall not be responsible for the through transmission of signals generated by the CPE or for the quality of, or defects in, such transmission or the reception of signals by the CPE

(C) The Telephone Company undertakes the responsibility to maintain and repair the service it furnishes.

The Telephone Company will provide the customer reasonable notification of service-affecting activities that may occur in the normal operation of its business. Such activities may include, but are not limited to, routine preventative maintenance and major switching machine change-outs, equipment additions and removals or rearrangements. The Telephone Company will work cooperatively with the customer to determine the notification requirements.

Maintenance of Service regulations and charges are set forth in 13.3.2, Maintenance of Service, for customer reported trouble.

The Telephone Company may request additional customer information as may be required to permit the Telephone Company to maintain the TSPSA network and to ensure that the service arrangement is in compliance with regulations contained in this section. (N)

ACCESS SERVICE

16. Public Packet Data Network (Cont'd) (N)

16.4 Telecommunications Service Provider Service Access (TSPSA) (Cont'd)

16.4.4 Limitations (Cont'd)

(D) The Telephone Company shall not be responsible for error correction. TSPSA switches may discard frames with errors. The switches may also discard frames when the network supporting TSPSA is in a state of congestion.

(E) The Telephone Company shall not be responsible for installation, operation, maintenance or adapting the TSPSA to the technological requirements of any specific CPE.

(F) The Telephone Company shall not be responsible to the customer or user if changes in any of the equipment, operations or procedures of the Telephone Company used in the provision of TSPSA render any facilities provided by the customer or user obsolete or require modification or alteration of such equipment or system or otherwise affect its use or performance, provided the Telephone Company has met any applicable information disclosure requirements otherwise required by law. (N)

ACCESS SERVICE

16. Public Packet Data Network (Cont'd) (N)

16.4 Telecommunications Service Provider Service Access (TSPSA) (Cont'd)

16.4.5 Rate Elements

The following describes the rate elements available for TSPSA. Specific rates and charges for these elements are set forth in 17.4.8.2 of this tariff.

(A) Network Gateway Interface (NGI)

The NGI rate element is a standard defined interface using cell relay User-Network Interface signaling protocol. The NGI includes only the port access to the TSPSA network.

NGI's are offered, where Telephone Company facilities exist, at the following rates: 1.53 Mbps with bandwidths up to 1.5 Mbps; 44.7 Mbps with bandwidths up to 40 Mbps; and 155.5 Mbps with bandwidths up to 144 Mbps.

A monthly rate and nonrecurring charge applies for each NGI installed from the customer's network interface to the central office-based TSPSA switch.

(B) User-Network Interface (UNI)

The UNI rate element is a standard defined User-Network Interface which offers customer access to the TSPSA network. This element includes the facility from the customer premises, and the port access.

UNIs are offered, where Telephone Company's facilities exist, at the following rates: 1.53 Mbps with bandwidths up to 1.5 Mbps; 44.7 Mbps UNI with bandwidths up to 40 Mbps; 155.5 Mbps UNI with bandwidths up to 144 Mbps.

A monthly rate and nonrecurring charge applies for each UNI installed from the customer's network interface to the central office based TSPSA switch. (N)

ACCESS SERVICE

16. Public Packet Data Network (Cont'd) (N)

16.4 Telecommunications Service Provider Service Access (TSPSA) (Cont'd)

16.4.5 Rate Elements (Cont'd)

(C) Network Link (NL)

A Network Link (NL) is an optional element that may be purchased for an additional charge to establish a dedicated link between two central office based TSPSA switches. A NL cannot be purchased without an associated UNI and is available at 1.53 Mbps only.

(D) Virtual Channel Connection/Virtual Path Connection (VCC/VPC)
The VCC/VPC rate element provides virtual connections between a customer's UNIs.

A monthly rate and nonrecurring charge applies for each VCC or VPC element provisioned for a customer's NGI, UNI or NL.

(E) Constant Bit Rate (CBR)

The CBR rate element supports applications where variable delays in transmission would negatively impact the information content. VCC/VPCs provisioned with CBR are intended for applications requiring minimal delay variation and loss.

An additional monthly rate and nonrecurring charge applies for each VCC/VPC bandwidth increment provisioned with CBR.

(F) Inverse Multiplexing for User Network Interface (IMA UNI)

The IMA UNI enables the aggregation of various speed, multiple traffic streams, conversion to cell relay cells and distribution across multiple DS1s. IMA UNI must be provisioned over copper DS1s and includes the port access. The customer must specify the speed for the IMA UNI. IMA UNI is available at the following speeds: 3 Mbps, 4.5 Mbps, 6 Mbps and 12 Mbps.

(G) Inverse Multiplexing for Network Link (IMA NL)

The IMA NL enables the aggregation of various speeds, multiple traffic streams, conversion to cell relay cells and distribution across multiple DSIs. IMA NL includes port access and is available at the following speeds: 3 Mbps, 4.5 Mbps, 6 Mbps, and 12 Mbps. The customer must specify the desired speed. (N)

ACCESS SERVICE

16. Public Packet Data Network (Cont'd) (N)

16.4 Telecommunications Service Provider Service Access (TSPSA) (Cont'd)

16.4.6 Rate Applications

There are two types of rates and charges that apply to the various rate elements for TSPSA. These are monthly recurring rates and nonrecurring charges.

(A) Monthly Rates

Monthly Rates are fixed recurring rates that apply each month, or fraction thereof, that a specific rate element is provided. For billing purposes each month is considered to have thirty (30) days.

(1) Minimim Period

TSPSA is provided for a minimum period of one year. When service is disconnected prior to the expiration of the one (1) year minimum period or the optional three (3) year term period, monthly charges are applicable for the balance of the period ordered by the customer.

If service is disconnected after the one or three year period ordered, monthly charges will be based on the actual number of days the service is furnished. In order to determine the charges for a fractional portion of a month, a month is considered to have 30 days.

Monthly recurring rates are applicable to TSPSA rate elements described in 16.4.5, preceding. (N)

ACCESS SERVICE

16. Public Packet Data Network (Cont'd) (N)

16.4 Telecommunications Service Provider Service Access (TSPSA) (Cont'd)

16.4.6 Rate Applications (Cont'd)

(B) Nonrecurring Charges

Nonrecurring charges are one-time charges applicable for the installation of each NGI, UNI, NL, VCC, VPC, IMA UNI, and IMA NL.

In addition to the installation of service charge, a nonrecurring order charge will apply as specified in Section 17 following.

A change that cannot be supported by the bandwidth of the existing service connection will require a new service connection.

16.4.7 Term Pricing

(A) General

TSPSA-Term Pricing Plan (TPP) provides the customer with rate stabilization and discounted tariff rates. The TSPSA-TPP provides for a one or three year service period for rate stabilization. Charges for the one and three year plans are specified in Section 17 following.

TSPSA TPP annual/or three year rates will be exempt from Telephone Company initiated rate increases throughout the selected service period. Should the Telephone Company increase its rates during the TSPSA-TPP service period, the customer will continue to pay the rates in effect at the time the customer elected to establish service under TSPSA-TPP.

(B) Service Available under TSPSA-TPP

A customer may elect to participate in an TSPSA-TPP for NGI, UNI, IMA UNI, NL and IMA NL rate elements. No term period is required or available for VCC, VPC, or CBR rate elements. (N)

ACCESS SERVICE

16. Public Packet Data Network (Cont'd) (N)

16.4 Telecommunications Service Provider Service Access (TSPSA) (Cont'd)

16.4.7 Term Pricing (Cont'd)

(C) Terms and Conditions

The customer must specify the length of the service period at the time the TSPSA-TPP is established.

(D) Pricing Plan Conversion

The customer may request an existing TSPSA provided on a one (1) year plan be converted to a three (3) TPP.

Prior to the expiration of the original service period, the customer may convert an existing TSPSA-TPP service period to a new service period without incurring termination charges provided the new service period is equal to or greater than the remaining portion of the original service period.

When the customer converts to a greater term commitment, actual time in service for the original TPP will be applied to the new TPP. However, no credits or refunds will apply for the billing of actual time in service for the previous TPP.

(E) Renewal

The customer must provide the Telephone Company notice of intent to renew a one-year TPP no later than 60 days prior to its expiration. The renewal rates will be the rates that are currently in effect and available to all customers. If the customer elects not to renew the TPP, or does not notify the Telephone Company of its intent to renew the TPP, the customer's service will automatically be billed under the tariffed month-to-month rates in effect at the time the TPP expires. (N)

ACCESS SERVICE

16. Public Packet Data Network (Cont'd) (N)

16.4 Telecommunications Service Provider Service Access (TSPSA) (Cont'd)

16.4.7 Term Pricing (Cont'd)

(F) Termination of a TPP

Customers requiring the termination of a TPP prior to the expiration date, excluding any TPP terminated as a result of a pricing plan conversion will be charged in full for the remaining months of the term plan ordered. Customers terminating a three (3) year TPP prior to expiration will also be charged for any difference between one (1) year and three (3) year installation charges.

For example, a customer with 1 - 1.53 UNI port and a three (3) year TPP who disconnects after 24 months would pay a termination liability of $7800.00.

(1.53 UNI port @ $600.00/mo. X 12 mos. = $7200.00
Difference between one (1) year and three (3) year
installation = $600.00)

(N)

ACCESS SERVICE

16. Public Packet Data Network (Cont'd) (N)

16.5 Multi-Megabit Ethernet Transmission Service (METS)

16.5.1 General Description

(A) Basic Service Description

Multi-Megabit Ethernet Transmission Service (METS) is a high-speed (10 or 100 Mbps) packet based service for the transmission of data between a customer designated location (CDL), the customer's Serving Wire Center, and an Internet Service Provider (ISP).

METS provides dedicated bandwidth at a rate of 10 or 100 Mbps.

METS is suitable for data transmission only.

(B) Service Provisioning

METS is provisioned over existing Telephone Company facilities. METS will be provided subject to the availability and limitations of the Telephone Company wire centers and outside plant facilities. New construction may be undertaken at the option of the Telephone Company at additional cost.

The subscriber is provided with an Ethernet electrical interface.

METS is available 24 hours per day, 7 days per week, except for preventative maintenance. (N)

ACCESS SERVICE

16. Public Packet Data Network (Cont'd) (N)

16.5 Multi-Megabit Ethernet Transmission Service (METS) (Cont'd)

16.5.1 General Description (Cont'd)

(C) Responsibility of the Telephone Company

The Telephone Company will provision and maintain METS for the customer.

The Telephone Company is not responsible for the installation, operation, or maintenance of any equipment provided by the customer.

Company provided shared network equipment, for use in METS is not accessible for the customer.

(D) Responsibility of the Customer

The customer is responsible for the provision and maintenance of all customer provided equipment and to insure that the operating characteristics of this equipment are comparable with and does not interfere with the service offered by the Telephone Company.

16.5.2 Typical Arrangements

Typical arrangements are shown on the following page. The acronyms used in the diagrams are as follows:

CDP – Customer Designated Premises
CDPI – Customer Designated Premises Interface
ISPI - Internet Service Provider Interface
MPI – Meet Point Interface
MRC – Monthly Recurring Charge
SWC –Serving Wire Center

(N)

ACCESS SERVICE

16. Public Packet Data Network (Cont'd) (N)

16.5 Multi-Megabit Ethernet Transmission Service (METS) (Cont'd)

16.5.2 Typical Arrangements

The following diagrams depict generic views of the components of Megabit Ethernet Transmission Service (METS) and the manner in which the components are combined to provide METS.

METS Connection to Existing Access Connection

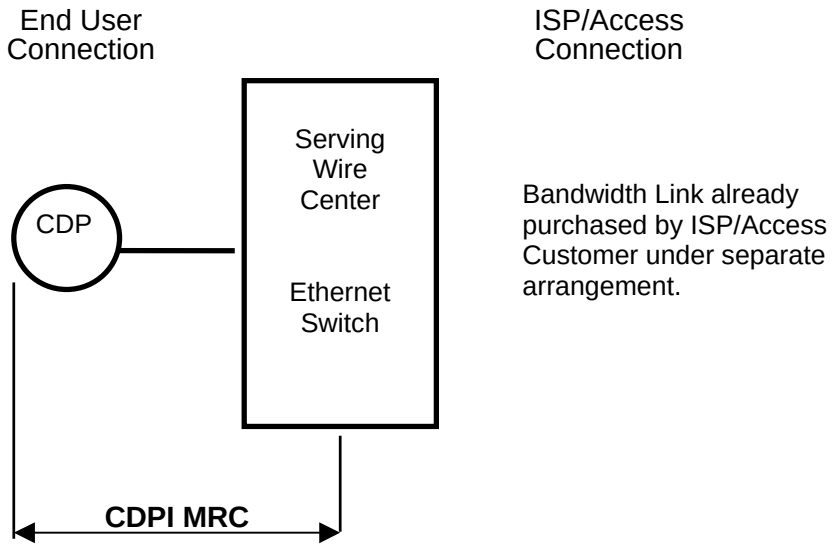

METS Connection to ISP Interface (ISPI) at Ethernet Serving Wire Center

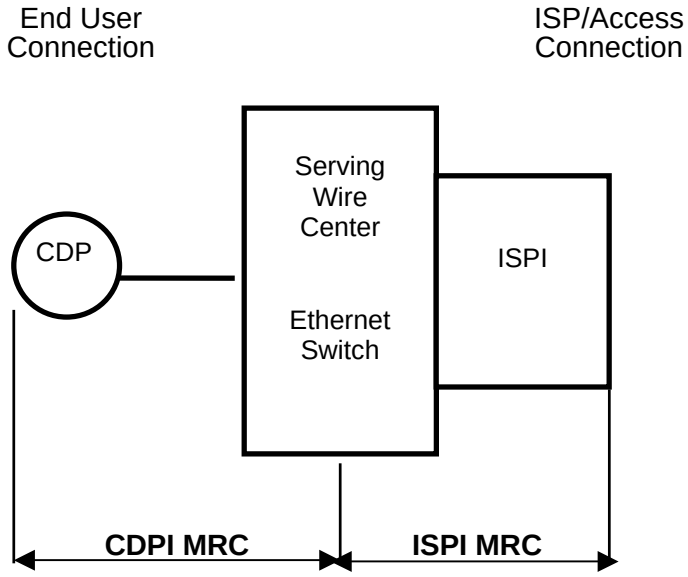

(N)

ACCESS SERVICE

16. Public Packet Data Network (Cont'd) (N)

16.5 Multi-Megabit Ethernet Transmission Service (METS) (Cont'd)

16.5.2 Typical Arrangements (Cont'd)

METS Connection to ISP Interface (ISPI) at Ethernet Serving Wire Center With Bridging

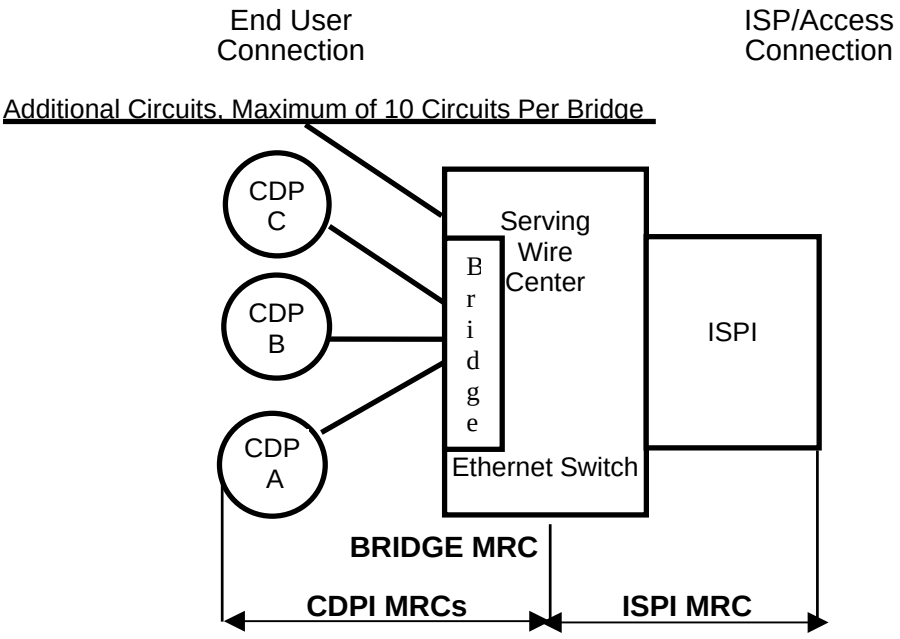

METS Connection to Meet Point Interface (MPI)

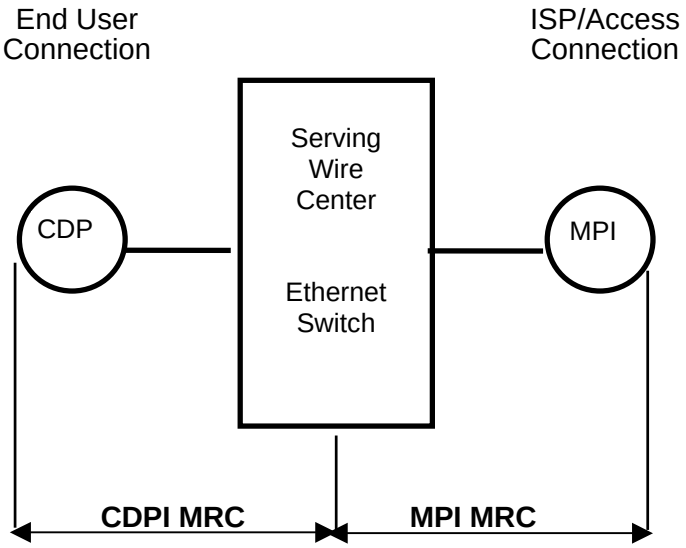

(N)

ACCESS SERVICE

16. Public Packet Data Network (Cont'd) (N)

16.5 Multi-Megabit Ethernet Transmission Service (METS) (Cont'd)

16.5.3 Rate Regulations

This section contains the regulations governing the rates and charges that apply for METS.

(A) Minimum Period

The minimum period for which METS is provided to a customer and for which charges are applicable is twelve months.

(B) METS Term Pricing Plan (METS TPP)

(1) General

METS Term Pricing Plan (METS TPP) provides the customer with rate stabilization of tariff rates in effect at the time of installation. The METS TPP provides for a one, two or three-year service period for rate stabilization.

METS TPP one-year, two-year or three-year rates will be exempt from Telephone Company initiated rate increases throughout the selected service period. The METS customer shall enter into a commitment with the Telephone Company to establish the METS TPP. Should the Telephone Company increase its rates during the METS-TPP service period, the customer will continue to pay the rates in effect at the time the customer elected to establish service under a METS-TPP. An individual METS TPP does not apply to METS Service installed subsequent to the execution of the individual METS TPP commitment. A separate METS TPP commitment is required for subsequent METS Service installations. (N)

ACCESS SERVICE

16. Public Packet Data Network (Cont'd) (N)

16.5 Multi-Megabit Ethernet Transmission Service (METS) (Cont'd)

16.5.3 Rate Regulations (Cont'd)

(B) METS Term Pricing Plan (METS TPP) (Cont'd)

(2) Services Available Under METS TPP

A customer may elect to participate in a METS-TPP for the METS Customer Designated Premises Interface (CDPI), the METS Internet Service Provider Interface (ISPI), the METS Bridge Interface and the METS Meet Point Interface (MPI).

(3) Renewal

The customer must provide the Telephone Company notice of intent to renew a METS TPP no later than 60 days prior to its expiration. The renewal rates will be the rates that are currently in effect and available to all customers. If the customer elects not to renew the METS TPP, or does not notify the Telephone Company of its intent to renew the METS TPP, the customer's service will automatically be billed under the tariffed month-to-month rates in effect at the time the METS TPP expires.

(4) Termination of a METS TPP

Customers requiring the termination of a METS TPP prior to the expiration date will be charged in full for the remaining months of the term plan ordered. (N)

ACCESS SERVICE

16. Public Packet Data Network (Cont'd) (N)

16.5 Multi-Megabit Ethernet Transmission Service (METS) (Cont'd)

16.5.3 Rate Regulations (Cont'd)

(C) Rate Elements

There are five types of rates and charges applicable to METS. These are a nonrecurring charge and four types of monthly recurring charges.

(1) METS Nonrecurring Charge

A single METS Nonrecurring charge applies to each METS circuit installed by the Telephone Company, whether the circuit is provisioned only between the Customer Designated Premises (CDP) and the SWC Ethernet switch for which an existing link to another carrier or Internet Service Provider (ISP) already exists or is provisioned beyond the SWC Ethernet switch to an Internet Service Provider Interface (ISPI) or to a Meet Point Interface (MPI) with another carrier.

(2) METS Customer Designated Premises Interface (CDPI)

The METS Customer Designated Premises Interface (CDPI) rate element is for a standard Ethernet defined interface between the CDP and the Telephone Company serving wire center (SWC) at which the Ethernet switch or router is located. Standard Ethernet signaling protocols provided by the Telephone Company shall apply to the interface. The CDPI rate element includes termination at both the CDP and the SWC, the facility from the CDP to the SWC, port access to the Ethernet switch and the Ethernet switch.

A CDPI charge applies to each METS connection between a CDP and the SWC at which the Ethernet switch designated by the Telephone Company is located. (N)

ACCESS SERVICE

16. Public Packet Data Network (Cont'd) (N)

16.5 Multi-Megabit Ethernet Transmission Service (METS) (Cont'd)

16.5.3 Rate Regulations (Cont'd)

(C) Rate Elements (Cont'd)

(3) METS Internet Service Provider Interface (ISPI)

The Internet Service Provider Interface (ISPI) rate element is for a standard Ethernet defined interface between the SWC Ethernet switch and an ISP with a presence in the SWC. ISP presence in the SWC may be either through local facilities for an ISP physically located in the Telephone Company's local exchange service area or through an interexchange carrier with an existing connection for an ISP not located in the Telephone Company's local exchange service area. Standard Ethernet signaling protocols provided by the Telephone Company shall apply to the interface. The ISPI rate element includes termination at both the network side of the Telephone Company Ethernet switch and the connection to the ISP's existing connection.

An ISPI charge applies to each connection for a METS circuit originating at a CDP and terminating at the Telephone Company Ethernet switch which is, in turn, connected to the ISP's existing connection at the Ethernet switch SWC. (N)

ACCESS SERVICE

16. Public Packet Data Network (Cont'd) (N)

16.5 Multi-Megabit Ethernet Transmission Service (METS) (Cont'd)

16.5.3 Rate Regulations (Cont'd)

(C) Rate Elements (Cont'd)

(4) METS Bridge Interface

The METS Bridge Interface provides for the bridging of up to ten (10) CDPI links to one ISPI link or one CDPI link at the serving wire center. A METS Bridge Interface monthly recurring charge applies to each METS Bridge Interface in addition to the METS CDPI monthly recurring charges for each of the circuits connected to the METS Bridge Interface and, if applicable, METS ISPI or MPI monthly recurring charges. In the event a METS Bridge Interface is installed for existing METS CDPIs, without installation of additional CDPIs at the same time, a METS Nonrecurring charge shall apply in addition to the METS Bridge Interface monthly recurring charges.

(5) METS Meet Point Interface (MPI)

The METS Meet Point Interface (MPI) rate element is for a standard Ethernet defined interface between the SWC Ethernet switch and an ISP through a circuit jointly provided by the Telephone Company and another carrier. Standard Ethernet signaling protocols provided by the Telephone Company shall apply to the interface. The ISPI rate element includes termination at the network side of the Telephone Company Ethernet switch and the Telephone Company's portion of the facilities up to the meet point.

An MPI charge applies to each connection for a circuit originating at a CDP and terminating at the Telephone Company Ethernet switch which, in turn, is connected to the ISP through a circuit provided jointly by the Telephone Company with another carrier.

(N)

ACCESS SERVICE

16. Public Packet Data Network (Cont'd) (N)

16.5 Multi-Megabit Ethernet Transmission Service (METS) (Cont'd)

16.5.3 Rate Regulations (Cont'd)

(D) Mileage Bands

The monthly recurring charges described in Section 16.5.1.(B) above are applied on the basis of mileage bands. Mileage bands are determined on the basis of end-to-end airline miles (ALM) from the CDP to the other end of the circuit provided by the Telephone Company. For METS circuits connected to an existing ISP interface located at the Ethernet switch SWC, the end-to-end ALM are the miles from the CDP to the Ethernet switch SWC.

The airline mileage to be used in determining the Mileage Band for METS monthly recurring charges will be calculated under the mileage measurement procedures described at Section 7.2.5 of this Tariff.

The METS mileage bands are as follows:

Band	End-to-End Airline Miles
A	0 to 3
B	Over 3 to 6
C	Over 6

(E) Service Suspension

Suspension of service by the Customer during the service period is not allowed. (N)

ACCESS SERVICE

16. Public Packet Data Network (Cont'd) (N)

16.6 High Speed Internet (HSI) Access Service

16.6.1 General Description

(A) Basic Service Description

High Speed Internet (HSI) Access Service is a high-speed packet based service for the transmission of data between local exchange customer designated premises and Internet Service Providers (ISPs) by the Telephone Company designated data technology and equipment. HSI Access Service is offered at various downstream (Down) and upstream (Up) speeds. The "Up" speed represents transmission speed in kilobits per second (Kbps) or megabits per second (Mbps), from the point of demarcation at the customer's designated premises to the Telephone Company's HSI Access Service Connection Point; while the "Down" speed represents transmission speed in Kbps or Mbps from the Telephone Company's HSI Access Service Connection Point to the point of demarcation at the customer's designated premises. Actual speed may be affected by loop distance and other factors.

The HSI Access Service may require a splitter at both the customer's designated premises and the Telephone Company's serving wire center to split the traffic between data and voice. The customer is responsible for providing and maintaining the splitter at the customer designated premises.

(B) Service Provisioning

HSI Access Service is provisioned over existing Telephone Company copper facilities and transported to the Telephone Company's backbone network. HSI Access Service provides a connection from the customer's designated location (CDL) to the HSI Access Service Connection Point.

Access from the Telephone Company's HSI Access Service Connection Point will be provided via High Capacity Special Access Service, Synchronous Optical Channel Service and/or Frame Relay Access Service, where facilities permit. High Capacity Special Access Service is available in Section 7.10 preceding. Synchronous Optical Channel Service is available in Section 7.11 preceding. Frame Relay Access Service is available in Section 16.1 preceding. If a customer utilizes Special Access Service or Frame Relay Access Service pursuant to sections 7.10 or 16.1 preceding, the associated rates and charges for such facilities shall apply in addition to the rates and charges associated with the HSI Access Service rate element. (N)

ACCESS SERVICE

16. Public Packet Data Network (Cont'd) (N)

16.6 High Speed Internet (HSI) Access Service (Cont'd)

16.6.1 General Description (Cont'd)

(B) Service Provisioning (Cont'd)

High Capacity Service and/or Synchronous Optical Channel Service ordered by a customer for connection to the Telephone Company's HSI Access Service Connection Point includes the HSI Access Service Connection. Regulations concerning HSI Access Service Connection are at Section 7.10.3.(E) preceding respecting 1.544 Mbps and 44.736 Mbps High Capacity Service and Section 7.11.3.(C) preceding respecting OC3 Synchronous Optical Channel Service, OC3c Synchronous Optical Channel Service or 100 Mbps Ethernet Channel Service.

The Telephone Company will qualify the local exchange service loop between the customer's designated premises and the serving wire center. The purpose of qualification is to determine the availability and suitability of existing Telephone Company facilities to provide the service, and to determine if Loop Conditioning is required to support HSI Access Service. The Telephone Company will not provision this service on facilities which are not suitable for HSI Access Service.

The Telephone Company does not undertake to originate data, but offers the use of its HSI Access Service, where available, to customers for the purpose of transporting data originated by the customer or a third party.

HSI Access Service is limited to use for transmission of data between the designated premises of a local exchange customer of the Telephone Company and the local exchange customer's ISP. The high speed data transmission path installed by the Telephone Company under an HSI Access Service offering for use for transmission of data between the designated premises of a local exchange customer and the local exchange customer's ISP may also be used by the local exchange customer for transmission of data for purposes of receiving one-way video services. Use of the HSI Access Service for one-way video transmission is subject to the availability and technical capability of the Telephone Company. The video service provider must connect to the Telephone Company HSI Access Service Connection Point. This connection is subject to the technical capability of the Telephone Company's interconnecting facilities. The connection must be provisioned under applicable rates, terms and conditions for appropriate jurisdiction. (N)

ACCESS SERVICE

16. Public Packet Data Network (Cont'd) (N)

16.6 High Speed Internet (HSI) Access Service (Cont'd)

16.6.1 General Description (Cont'd)

(B) Service Provisioning (Cont'd)

All customers will be served from the nearest suitably equipped end office designated by the Telephone Company. HSI Access Service will be provided subject to the availability and limitations of the Telephone Company wire centers and outside plant facilities. HSI Access Service is only available where permitted by technical capabilities of the Telephone Company, including but not limited to facility distance and type of physical plant.

(C) Responsibility of the Telephone Company

The Telephone Company will provision and maintain HSI Access Service for the customer up to and including the Network Interface Device (NID) or the protector. The Telephone Company will advise the customer of the customer premises equipment (CPE) necessary to support HSI Access Service that the customer will need to purchase. The Telephone Company will provide to the ISP technical specifications for connection to the Telephone Company's HSI Access Service applicable to the technology deployed by the Telephone Company.

(D) Rights of the Telephone Company

HSI Access Service will be provided over existing Telephone Company local exchange service lines. Rates and regulations for HSI Access Service are in addition to any rates and regulations that apply for the associated local exchange service line provided under the terms and conditions in the Telephone Company's general and/or local exchange service tariffs. The Telephone Company will automatically disconnect HSI Access Service when the associated local exchange service line is disconnected for any reason.

The Telephone Company will not provision HSI Access Service if the Telephone Company has reasonably determined that (a) it is not technically feasible over existing facilities or (b) it will cause interference problems within the Telephone Company's network or other facilities.

During the Telephone Company's network maintenance and software update period, it may be necessary to temporarily place the HSI Access Service central office equipment out of service. The Telephone Company reserves the right to temporarily interrupt HSI Access Service at other times in emergency situations. (N)

ACCESS SERVICE

16. Public Packet Data Network (Cont'd) (N)

16.6 High Speed Internet (HSI) Access Service (Cont'd)

16.6.1 General Description (Cont'd)

(E) Responsibility of the Customer

The customer is responsible for providing the Telephone Company with the necessary information to provision HSI Access Service (e.g., customer name, telephone number and premises address; billing name and address when different from the customer name and premise address; its Internet Protocol (IP) address; and the contact name and telephone number of the ISP with which the customer's HSI Access Service will interconnect).

The customer is responsible for providing compatible customer premises equipment (CPE) that is used for connection to HSI Access Service.

When HSI Access Service is ordered by the ISP, the ISP customer is responsible for providing the Telephone Company with the necessary information (e.g., Data Link Connection Identifier(s), and/or Internet Protocol) to provision the HSI Access Service.

The ISP customer will obtain the appropriate authorization to allow the Telephone Company to provision HSI Access Service over the customer's end user's existing telephone exchange service line.

Where required, the ISP customer will be responsible for obtaining permission from its subscriber(s) for the Telephone Company's agents or employees to enter the customer's designated premises at a mutually agreed upon time for the purpose of installing, inspecting, repairing, or upon termination of the service, removing the service components of the Telephone Company.

The ISP customer will deal directly with its end user customers with respect to all matters pertaining to the service provided, including marketing, sales, ordering, installation, maintenance, trouble reporting, repair, billing and collections. (N)

ACCESS SERVICE

16. Public Packet Data Network (Cont'd) (N)

16.6 High Speed Internet (HSI) Access Service (Cont'd)

16.6.2 Rate Regulations

(A) Rate Elements

There are three types of rates and charges applicable to HSI Access Service. These are a monthly rate, a nonrecurring charge and a network reconfiguration charge.

The monthly rate applies each month or fraction thereof for each local exchange service line equipped with HSI Access Service.

A nonrecurring charge applies per local exchange service line for the installation of HSI Access Service.

An HSI Access Service Network Reconfiguration Charge applies when the HSI Access Service customer's ISP requests the Telephone Company to modify the Telephone Company's network to accommodate a change in the HSI Access Service customer's existing HSI Access Service line. A nonrecurring charge applies for each request per HSI Access Service line. The Telephone Company will bill the HSI Access Service Network Reconfiguration Charge to the HSI Access Service customer's ISP. No HSI Access Service Network Reconfiguration Charge shall apply where the change requested by the HSI Access Service customer is for a change in HSI Access Service transmission speed.

All changes to existing HSI Access Service (including but not limited to change of ISP), other than changes involving HSI Access network reconfigurations and administrative activities, will be treated as a discontinuance of the existing service and an installation of a new service. A nonrecurring installation charge will apply per HSI Access Service line for this work activity.

Rates and charges for HSI Access Service are set forth in 17.4.8 following. (N)

ACCESS SERVICE

(N)

16. Public Packet Data Network (Cont'd)

16.6 High Speed Internet (HSI) Access Service (Cont'd)

16.6.2 Rate Regulations (Cont'd)

(B) Rate Application

HSI Access Service is based on differing volume levels of HSI Access Service connections per Section 17.4.8, following.

The rates applicable to HSI Access Service provided under an HSI Access Service Term and Volume Plan (HSI Access Service-TVP) arrangement are specified in 17.4.8, following.

The following diagram depicts a typical HSI Access Service configuration:

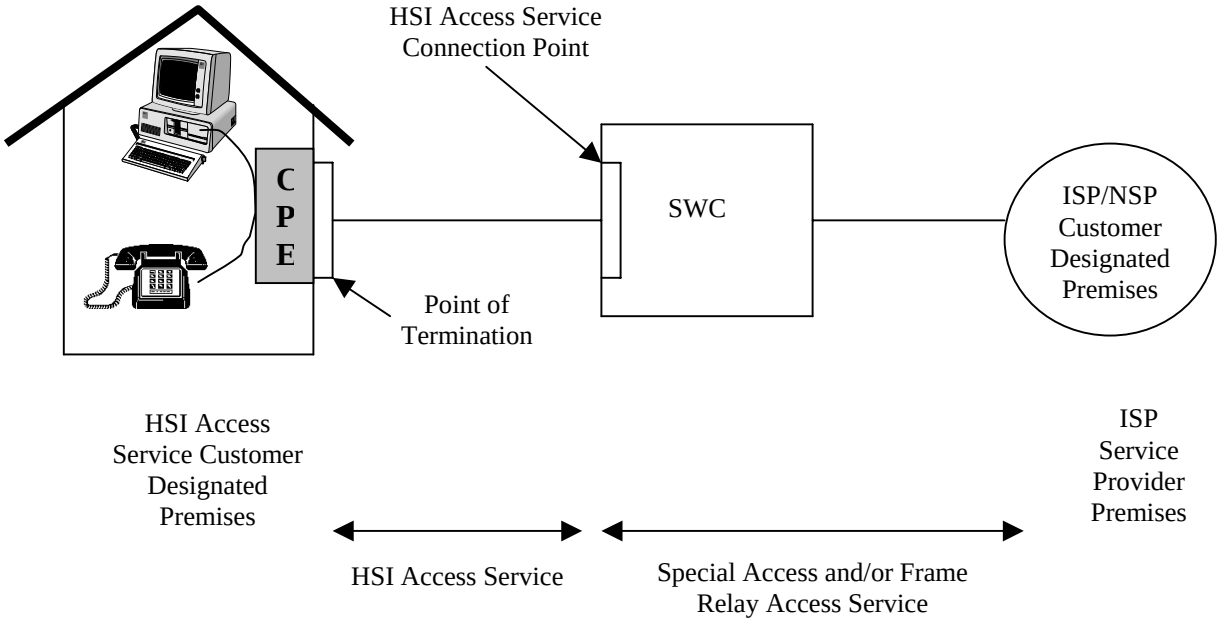

(C) Minimum Period

The minimum period for which HSI Access Service is provided to a customer and for which charges are applicable is one month.

(N)

ACCESS SERVICE

16. Public Packet Data Network (Cont'd) (N)

16.6 High Speed Internet (HSI) Access Service (Cont'd)

16.6.2 Rate Regulations (Cont'd)

(D) Moves

A move involves a change in the physical location of one of the following:

- The Point of Termination at the customer designated premises

- The customer's designated premises

The provisions for moves of HSI Access Service are the same as those described in Section 7.2.3, preceding, except that an Access Order Charge will not apply.

(E) Term and Volume Plan (TVP)

(1) Description

The terms and conditions specified herein are applicable to HSI Access Service where the Telephone Company offers an HSI Access Service Term and Volume Plan (TVP) and are in addition to other regulations as specified in this tariff. If the Telephone Company is offering an HSI Access Service TVP, the TVP will be included in the HSI Access Service rate section in Section 17.4.8, following. If TVP rates are not indicated in Section 17.4.8, the Telephone Company does not provide an HSI Access Service TVP.

The HSI Access Service Term and Volume Plan (TVP) will allow customers discounted access rates based upon the volume and/or term commitment. Rates will be based upon the TVP selected by the customer. TVP plans for an HSI Access Service offered by a Telephone Company, if any, will be indicated in the Telephone Company's respective rate section for HSI Access Service in Section 17.4.8 following.

Term plans of one (1), two (2) and three (3) years may be available to all customers at applicable rates set forth in the tariff regardless of when the subscription is made for an HSI Access Service TVP arrangement. The customer must designate on the order the type of payment plan selected.

The minimum volume commitment of the TVP selected must be met within twelve (12) months after the TVP is initiated. (N)

ACCESS SERVICE

16. Public Packet Data Network (Cont'd) (N)

16.6 High Speed Internet (HSI) Access Service (Cont'd)

16.6.2 Rate Regulations (Cont'd)

(E) Term and Volume Plan (TVP) (Cont'd)

(2) Rate Application

Upon expiration of a TVP period, the customer may choose a new TVP period, convert to month-to-month or terminate service. The month-to-month rates will be those rates that are in effect at the time of conversion. If the customer fails to make a choice by the end of the TVP period, the HSI Access Service will continue billing at the existing term and volume commitment level rates and a new TVP period will begin based on previously effective term and volume commitment. All terms and conditions, including Termination Liabilities will apply to the new TVP period.

Conversion to a month-to-month or different TVP period will require the customer to submit a change order. Conversion of existing TVP service to a different TVP period will be allowed without application of any nonrecurring charges.

(3) Changes in Length of TVP Period

The customer may elect to convert to a new TVP period subject to the following conditions:

(a) Credit will not be given toward the new payment period for payments made under the original TVP arrangement.

(b) Nonrecurring charges will not be reapplied for existing service(s).

(c) If the new TVP period is shorter in length than the time remaining under the existing TVP, the change to the new TVP period constitutes a discontinuance of the existing TVP service and termination liability charges apply.

(N)

ACCESS SERVICE

16. Public Packet Data Network (Cont'd) (N)

16.6 High Speed Internet (HSI) Access Service (Cont'd)

16.6.2 Rate Regulations (Cont'd)

(E) Term and Volume Plan (TVP) (Cont'd)

(4) Rate Changes

The customer may terminate the TVP without penalty or liability should the rates increase during the term of the existing TVP, with the exception of rate changes that may occur as a result of FCC presubscription for rate increases.

(5) Annual Review

Each customer's TVP will be reviewed annually. The customer will be notified as to the status of the TVP if the in-service quantity of HSI Access Services falls below the minimum volume commitment. An allowance of up to 3% will be considered as still having met the volume commitment. Where the customer has less than the volume commitment quantity for a specified discount, charges will be assessed.

If the total number of HSI Access Services in service qualifies the customer for a different TVP rate, the customer will have the option of increasing the commitment quantity for the remainder of the plan.

(6) TVP Conditions

After enrolling in the plan, the customer may delete or add HSI Access Services rated at the specified term period/threshold level rate at any time during the plan. (N)

ACCESS SERVICE

16. Public Packet Data Network (Cont'd) (N)

16.6 High Speed Internet (HSI) Access Service (Cont'd)

16.6. Rate Regulations (Cont'd)

(E) Term and Volume Plan (TVP) (Cont'd)

(7) Shortfall Charges for Failing To Meet Commitment

At the annual review, if the total volume in service does not meet the volume commitment, a payment equal to the difference between the TVP rate and the highest rate that would have been charged for services not under the TVP plan plus 10% will be assessed. The payment will be calculated using the prorated HSI Access Service aggregation quantity at the time of the review. The customer may choose to increase the volume commitment within 30 days after enrollment to the TVP and continue the TVP arrangement or choose to be billed on a going forward basis under either a different TVP or under the month-to-month rates. If after 30 days, the TVP volume levels are not met, the TVP will be automatically changed to the standard month-to-month rates.

(8) Termination Liability

When a TVP service is discontinued prior to the end of the commitment period, termination liability charges will apply, as set forth below, based on the remainder of the TVP period in effect at the time of disconnect.

One Year TVP – Prorated payment based on the HSI Access Service Level Package mix times the number of remaining months of the first year's recurring charges.

Two Year TVP – Prorated payment based on the HSI Access Service Level Package mix times the number of remaining months of the first and second year's recurring charges.

Three Year TVP – Prorated payment based on the HSI Access Service Level Package mix times the number of remaining months of the first, second and third year's recurring charges. (N)

ACCESS SERVICE

16. Public Packet Data Network (Cont'd) (N)

16.7 Asynchronous Transfer Mode Cell Relay Access Service (ATM-CRS)

16.7.1 General

Asynchronous Transfer Mode Cell Relay Access Service (ATM-CRS) is a connection-oriented transport service that is based on Asynchronous Transfer Mode (ATM) technology using fixed length, 53-byte cells. ATM cells generated by ATM-compatible customer premises equipment (CPE) are transmitted through the Telephone Company's ATM-CRS network to a pre-specified destination.

ATM-CRS provides customers requiring high-speed data transport for bandwidth intensive data, voice or video applications with the ability to interconnect multiple locations using the Telephone Company's ATM-CRS network. The customer may use ATM-CRS to interconnect its customer designated premises (CDPs) served by the Telephone Company's ATM-CRS network, to interconnect its local area network (LAN) to the Telephone Company's ATM-CRS network and/or to interconnect its CDPs to an ATM network located outside of the Telephone Company's serving territory.

If the Telephone Company so indicates in its respective ATM rate section, ATM may be offered solely for the purpose of providing Network Service Providers with the ability to connect to the Telephone Company's DSL Access Service Connection Point.

16.7.2 Service Description

ATM-CRS is provided using a combination of Ports, Virtual Paths and Virtual Circuit Channels. An ATM-CRS Port is required to provide the interface into the Telephone Company's ATM-CRS network. A Virtual Path (VP) is required to establish a transmission path between any two ATM-CRS Ports. Virtual Circuit Channels (VCCs) may be ordered from the Telephone Company to establish a communications path between any two CDPs or established by the customer using its own equipment.

Service is provided, where available, between CDPs and designated Telephone Company Serving Wire Centers (SWCs). ATM-CRS will be furnished where suitable facilities exist as determined by the Telephone Company. The Telephone Company will identify its ATM-CRS equipped Serving Wire Centers in the NATIONAL EXCHANGE CARRIER ASSOCIATION, INC. Tariff F.C.C. No. 4. (N)

ACCESS SERVICE

16. Public Packet Data Network (Cont'd)

16.7 Asynchronous Transfer Mode Cell Relay Access Service (ATM-CRS)

16.7.2 Service Description (Cont'd)

Rates and charges for ATM-CRS are specified in Section 17.4, following. The application of rates and charges for ATM-CRS is described later in this section.

16.7.3 Obligations of the Customer

In addition to the regulations described in other sections of this tariff, the following provisions apply to ATM-CRS:

(A) The customer is responsible for providing the Telephone Company with the necessary information to provision ATM-CRS as specified in Section 5.2 Ordering Requirements, preceding.

(B) The customer is responsible for providing and maintaining all required customer premises equipment (CPE), which is compatible with ATM-CRS and complies with the standards specified in the following publications: The ATM Forum Technical Committee ATM User-Network Interface (UNI) Signaling Specification (Version 4.0), Private Network-Network Interface Specification (Version 1.0) and BISDN Inter Carrier Interface (B-ICI) Specification (Version 2.0). A customer ordering Ethernet-based ATM-CRS Ports is also responsible for ensuring that its CPE complies with the standards specified in Technical Reference IEEE Std. 802.3, Part 3, Clause 15 for 10BASE-F, Clause 26 for 100BASE-F and Clauses 34 through 38 for 1000BASE-X connections. A customer ordering the ATM-CRS Port Internet Protocol (IP) Function is also responsible for ensuring that its CPE hands off IP packets to the Telephone Company's ATM-CRS network in a format that complies with the standards specified in the Internet Engineering Task Force Request For Comments (RFC) 791 entitled "INTERNET PROTOCOL, DARPA Internet Program Protocol Specification" (September 1981) and RFC 1483 entitled "Multiprotocol Encapsulation over ATM Adaptation Layer 5" (July 1993). (C) (N) (N)

16.7.4 Rate Regulations

This section contains the regulations governing the rates and charges that apply for ATM-CRS. Regulations governing the rates and charges for Special Access Service or other Public Packet Data Network Service provided under this tariff used in conjunction with ATM-CRS are as specified in the respective service's section of this tariff.

ACCESS SERVICE

16. Public Packet Data Network (Cont'd)

16.7 Asynchronous Transfer Mode Cell Relay Access Service (ATM-CRS) (N)

16.7.4 Rate Regulations (Cont'd)

The following diagrams depict generic views of the components of ATM-CRS. In the first figure, all of the customer's CDPs are served by ATM-CRS equipped SWCs. The ATM-CRS customer orders the applicable ATM-CRS components pursuant to the provisions specified in this section and the applicable Special Access Service components pursuant to the provisions specified in Section 7, preceding.

Figure 1

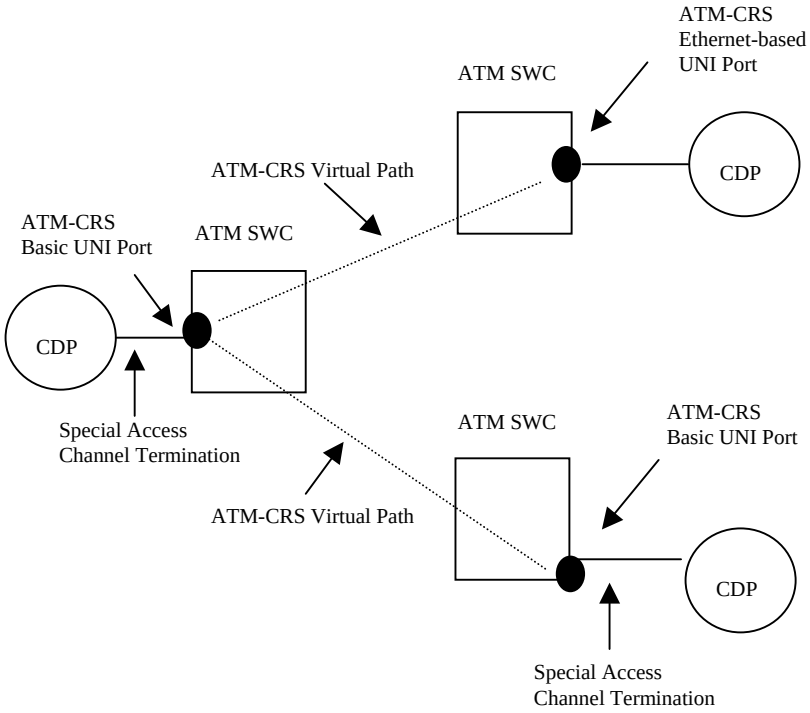

(N)

ACCESS SERVICE

16. Public Packet Data Network (Cont'd)

16.7 Asynchronous Transfer Mode Cell Relay Access Service (ATM-CRS) (N)

16.7.4 Rate Regulations (Cont'd)

In the second figure, one of the customer's CDPs is not served by an ATM-CRS equipped SWC. The ATM-CRS customer orders the applicable ATM-CRS components pursuant to the provisions specified in this section and the applicable Special Access Service components pursuant to the provisions specified in Section 7, preceding.

Figure 2

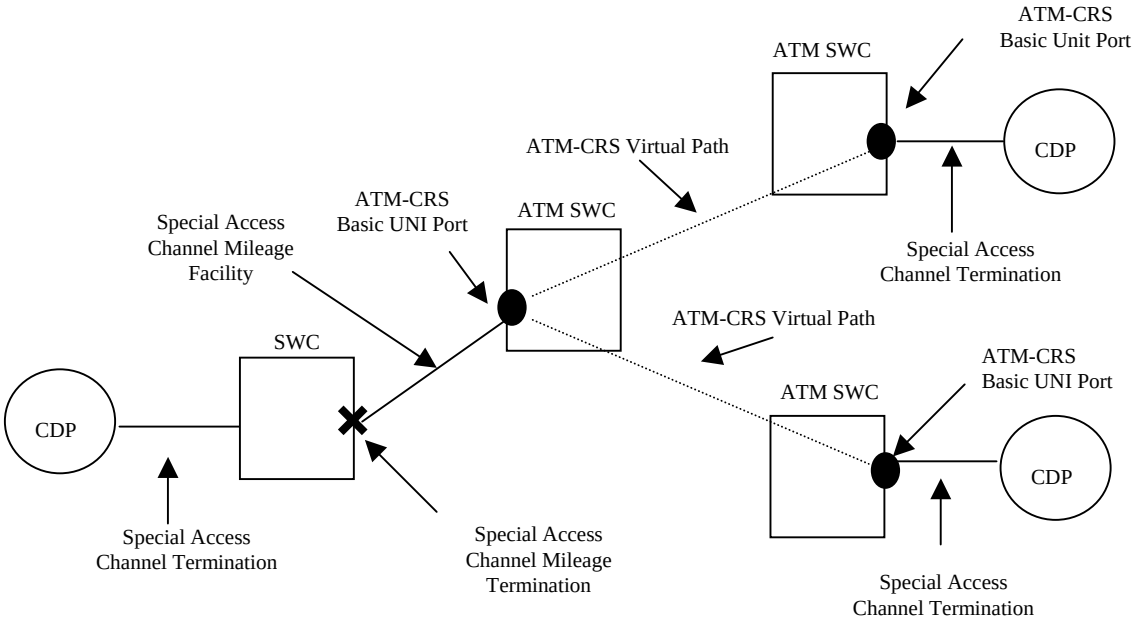

(N)

ACCESS SERVICE

16. Public Packet Data Network (Cont'd)

16.7 Asynchronous Transfer Mode Cell Relay Access Service (ATM-CRS) (N)

16.7.4 Rate Regulations (Cont'd)

In the third figure, one of the customer's CDPs is served by another telephone company's ATM network. The ATM-CRS customer orders the applicable ATM-CRS components from the Telephone Company pursuant to the provisions specified in this section and the applicable Special Access Service components pursuant to the provisions specified in Section 7, preceding. In addition, the customer will order the applicable ATM and special access services components from the distant telephone company.

Figure 3

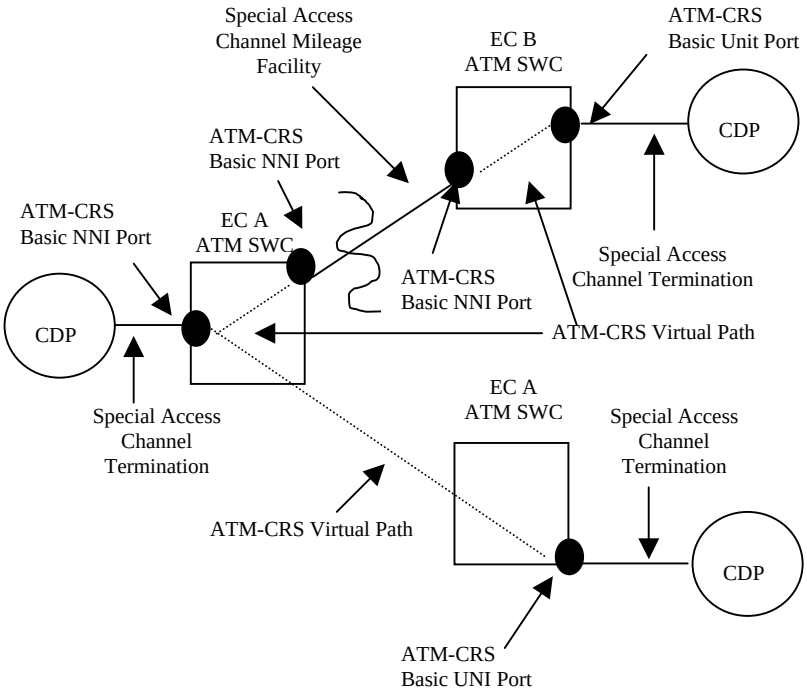

(N)

ACCESS SERVICE

16. Public Packet Data Network (Cont'd)

16.7 Asynchronous Transfer Mode Cell Relay Access Service (ATM-CRS) (N)

16.7.4 Rate Regulations (Cont'd)

(A) Rate Categories

Provision of ATM-CRS Access Service by the Telephone Company is indicated by inclusion of ATM-CRS Access Service rates in the Telephone Company's respective Section 17. In the event the Telephone Company offers some but not all elements of ATM-CRS Access Service, the elements offered by the Telephone Company will be indicated by the inclusion of rates for each element offered in the Telephone Company's respective rate section.

The various ATM-CRS Access Service components are described below.

(1) ATM-CRS Ports

An ATM-CRS Port receives ATM cells from the customer's ATM-compatible CPE, validates the addressing parameters contained in the cell headers, and transmits the cells into the ATM-CRS network. The ATM-CRS Port also receives ATM cells from the Telephone Company's ATM-CRS network or from an ATM network located outside of the Telephone Company's serving territory, validates the addressing parameters contained in the cell headers, and transmits the cells to the pre-designated CDP.

ATM-CRS Ports are available with a User Network Interface (UNI) or a Network to Network Interface (NNI) as described below. Each ATM-CRS Port must be associated with a minimum of one ATM-CRS Virtual Path or DSL Access Service Connection optional function.

Interconnection of the Telephone Company's ATM-CRS network to another ATM network located outside of the Telephone Company's serving territory is provided using ATM-CRS Basic NNI ports and Telephone Company provided Special Access Services. (N)

ACCESS SERVICE

16. Public Packet Data Network (Cont'd)

16.7 Asynchronous Transfer Mode Cell Relay Access Service (ATM-CRS) (N)

16.7.4 Rate Regulations (Cont'd)

(A) Rate Categories (Cont'd)

(1) ATM-CRS Ports

(a) Basic User Network Interface (UNI) Port

Basic UNI Ports provide a port only interface to the Telephone Company's ATM-CRS network and do not include the required transport facility between the CDP and the Telephone Company's SWC at which the basic UNI Port is located. Transport to connect the CDP with the basic UNI Port is provided using Telephone Company provided DS1 or DS3 High Capacity and/or, where available, OC3 or OC12 Synchronous Optical Channel Services as described in Sections 7.10 and 7.11, preceding. Basic UNI Ports are available at bandwidth speeds of 1.544 Mbps, 44.736 Mbps, and, where the Telephone Company offers Synchronous Optical Channel Service, 155.52 Mbps and 622.08 Mbps.

(b) Ethernet-based User Network Interface (UNI) Port

Ethernet-based UNI Ports are used to interconnect the customer's Ethernet compatible CPE with the Telephone Company's ATM-CRS network and include the transport facility between the CDP and the Telephone Company's SWC, provided that the CDP is served by the SWC in which the Ethernet-based UNI Port is located. Where offered, Ethernet-based UNI Ports are available at bandwidth speeds of up to 10 Mbps (i.e., 10BASE-F), up to 100 Mbps (i.e., 100BASE-F) and up to 1 Gbps (i.e., 1000BASE-X). (N)

ACCESS SERVICE

16. Public Packet Data Network (Cont'd)

16.7 Asynchronous Transfer Mode Cell Relay Access Service (ATM-CRS) (N)

16.7.4 Rate Regulations (Cont'd)

(A) Rate Categories (Cont'd)

(1) ATM-CRS Ports (Cont'd)

(c) Basic Network to Network Interface (NNI) Port

Basic NNI Ports provide a port only interface to the Telephone Company's ATM-CRS network and do not include the required transport facility between the CDP and the Telephone Company's SWC at which the basic NNI Port is located. Transport to connect the CDP with the basic NNI Port is provided using Telephone Company provided DS1 or DS3 High Capacity and/or OC3 or OC12 Synchronous Optical Channel Services described in Sections 7.10 and 7.11, preceding. Basic NNI Ports are available at bandwidth speeds of 1.544 Mbps, 44.736 Mbps, 155.52 Mbps and 622.08 Mbps.

(d) Ethernet-based Network to Network Interface (NNI) Port

Ethernet-based NNI Ports are used to interconnect the customer's Ethernet compatible CPE with the Telephone Company's ATM-CRS network and include a fiber only connection between the CDP and the Telephone Company's SWC, provided that the CDP is served by the SWC in which the Ethernet-based NNI Port is located. Ethernet-based NNI Ports are available at bandwidth speeds of up to 10 Mbps (i.e., 10BASE-F), up to 100 Mbps (i.e., 100BASE-F) and up to 1 Gbps (i.e., 1000BASE-X)

Monthly and nonrecurring charges apply for each ATM-CRS Port ordered. (N)

ACCESS SERVICE

16. Public Packet Data Network (Cont'd)

16.7 Asynchronous Transfer Mode Cell Relay Access Service (ATM-CRS) (N)

16.7.4 Rate Regulations (Cont'd)

(A) Rate Categories (Cont'd)

(2) ATM-CRS Virtual Paths

An ATM-CRS Virtual Path (VP) is a predefined, logical circuit established by the Telephone Company that is required to route ATM cells between any two ATM-CRS Ports located within the Telephone Company's ATM-CRS network. VPs may be established between two ATM-CRS UNI Ports, between an ATM-CRS UNI Port and an ATM-CRS NNI Port, or between two ATM–CRS NNI Ports. VPs are available in increments of 1 Mbps. The bandwidth capacity on a VP may not exceed the maximum bandwidth of the associated ATM-CRS Ports. In addition to specifying the bandwidth capacity required on its order, the customer must specify one of the following traffic routing prioritization parameters for each VP ordered.

(a) Constant Bit Rate (CBR)

CBR supports applications that require special network timing and minimal delay to ensure steady data flow of user information through the ATM-CRS network. Examples of applications requiring CBR include voice, some types of video and circuit emulation for higher speed special access services. CBR is the highest priority traffic on the network.

(b) Variable Bit Rate – real time (VBR-rt)

VBR-rt supports applications for which the data flow is bursty and requires low delay variance in ATM cell transmissions. Examples of applications requiring VBR-rt include voice and video. (N)

ACCESS SERVICE

16. Public Packet Data Network (Cont'd)

16.7 Asynchronous Transfer Mode Cell Relay Access Service (ATM-CRS) (N)

16.7.4 Rate Regulations (Cont'd)

(A) Rate Categories (Cont'd)

(2) ATM-CRS Virtual Paths (Cont'd)

(c) Variable Bit Rate – non real time (VBR-nrt)

VBR-nrt supports applications for which the data flow is bursty and variable delays in ATM cell transmissions can be tolerated. Examples of applications requiring VBR-nrt include file transfer, multimedia and computer aided design/computer aided manufacturing (CAD/CAM).

(d) Unspecified Bit Rate (UBR) UBR supports applications for which the data flow is bursty and delay tolerant using "best effort" engineering. The Telephone Company will attempt to deliver all ATM cells received on a UBR VP, however, network congestion may result in a loss of ATM cells. Examples of applications requiring UBR include interactive data sessions, file transfers, monitoring and signaling.

Monthly and nonrecurring charges apply for each VP ordered. The monthly recurring charge is comprised of a fixed path charge and a variable bandwidth capacity charge, which is calculated based on the total bandwidth of the VP. For example, where the fixed path rate is $5.00 and the variable bandwidth rate is $17.50 per Megabit, the monthly charges for a 145 Mbps VBR-rt path would be $2,542.50. (N)

ACCESS SERVICE

16. Public Packet Data Network (Cont'd)

16.7 Asynchronous Transfer Mode Cell Relay Access Service (ATM-CRS) (N)

16.7.4 Rate Regulations (Cont'd)

(A) Rate Categories (Cont'd)

(3) ATM-CRS Virtual Circuit Channels (VCCs)

An ATM-CRS Virtual Circuit Channel (VCC) is a pre-defined logical circuit used to route ATM cells between any two CDPs served by the Telephone Company's ATM-CRS network. VCCs may be established by the customer using its CPE or by the Telephone Company in its ATM-CRS network via the service order process. Monthly and nonrecurring charges apply for each VCC ordered by the customer. Rates and charges specified in Section 17.4.8(B)(3), following, do not apply to VCCs established by the customer.

(4) Optional Features and Functions

(a) DSL Access Service Connection Where available, ATM-CRS UNI and/or NNI Ports may be equipped with the DSL Access Service Connection function. This function provides for the interconnection of ATM-CRS with Telephone Company provided DSL Access Service as described in the applicable DSL regulation section of this tariff under which the Telephone Company provides DSL Access Service to the customer and the applicable Technical Reference(s) listed in this tariff. This optional function allows the ATM-CRS customer to receive ADSL and/or SDSL data traffic from and transmit ADSL and/or SDSL data traffic to its end user customers using a UBR traffic routing prioritization parameter. It is available only at Telephone Company designated DSL Access Service Connection Point SWCs located within the Telephone Company's serving territory. The speed of the DSL Access Service Connection function ordered by the customer may not exceed the speed of the associated ATM-CRS Port. (N)

ACCESS SERVICE

16. Public Packet Data Network (Cont'd)

16.7 Asynchronous Transfer Mode Cell Relay Access Service (ATM-CRS) (N)

16.7.4 Rate Regulations (Cont'd)

(A) Rate Categories (Cont'd)

(4) Optional Features and Functions (Cont'd)

(a) DSL Access Service Connection (Cont'd)

A nonrecurring charge applies per port to equip the ATM-CRS UNI or NNI Port with the DSL Access Service Connection function.

(i) A customer that requires a VBR-nrt traffic routing prioritization parameter may also order a DSL VCC between its CDP and the premises of its end user customer. Each DSL VCC is available with a maximum bandwidth capacity of 1 Mbps, however, the maximum speed to or from the ADSL and/or SDSL Access Service customer will not exceed the maximum peak speeds for the services as specified in the applicable DSL regulations of this tariff under which the Telephone Company provides DSL Access Service to the customer. The customer is responsible for specifying in its order the premises locations and number of DSL VCCs it wants established to each of its end user customers. Monthly and nonrecurring charges apply to each DSL VCC established by the Telephone Company. The DSL VCC charges apply in addition to the nonrecurring charge for equipping the ATM-CRS UNI or NNI Port with the DSL Access Service Connection function. (N)

ACCESS SERVICE

16. Public Packet Data Network (Cont'd) (N)

16.7 Asynchronous Transfer Mode Cell Relay Access Service (ATM-CRS)

16.7.4 Rate Regulations (Cont'd)

(A) Rate Categories (Cont'd)

(4) Optional Features and Functions (Cont'd)

(b) ATM-CRS Port Internet Protocol (IP) Function

Where available, ATM-CRS UNI and/or NNI Ports may be equipped with the ATM-CRS Port Internet Protocol (IP) Function. This non-chargeable optional function allows the customer to transmit IP packets, which were formatted by the customer's CPE in conformance with the standards specified in the Internet Engineering Task Force Request For Comments (RFC) 791 entitled "INTERNET PROTOCOL, DARPA Internet Program Protocol Specification" (September 1981) and RFC 1483 entitled "Multiprotocol Encapsulation over ATM Adaptation Layer 5" (July 1993), through the Telephone Company's ATM-CRS network. Monthly and nonrecurring charges do not apply to the ATM-CRS Port IP Function. When this function is installed subsequent to the installation of the ATM-CRS Port or removed from an existing ATM-CRS Port, an as specified in Section 17.4.1, following, will apply per order.

(N)

ACCESS SERVICE

16. Public Packet Data Network (Cont'd)

16.7 Asynchronous Transfer Mode Cell Relay Access Service (ATM-CRS) (N)

16.7.4 Rate Regulations (Cont'd)

(B) Types of Rates and Charges

There are two types of rates and charges. They are monthly rates and nonrecurring charges. The rates and charges are described below:

(1) Monthly Rates

Monthly rates are recurring rates that apply each month or fraction thereof that an ATM-CRS service component is provided. For billing purposes, each month is considered to have 30 days. (N)

ACCESS SERVICE

16. Public Packet Data Network (Cont'd)

16.7 Asynchronous Transfer Mode Cell Relay Access Service (ATM-CRS) (N)

16.7.4 Rate Regulations (Cont'd)

(B) Types of Rates and Charges (Cont'd)

(2) Nonrecurring Charges

Nonrecurring charges are one-time charges that apply for specific work activity (i.e., installation or change to an existing service). The types of nonrecurring charges that apply for ATM-CRS are installation of service and service rearrangements. These charges are in addition to the Access Order Charge as specified in Section 17.4.1, following.

(a) Installation of Service

Nonrecurring charges apply for installation of Ports, VPs, VCCs, and Optional Features and Functions ordered by the customer.

(b) Service Rearrangements

Service rearrangements are changes to existing (i.e., installed) services, which may be administrative only in nature as set forth below or, that involve an actual physical change to the service.

The VP nonrecurring charge will apply per VP to change the bandwidth capacity and/or to change the traffic routing prioritization parameter on an existing VP. (N)

ACCESS SERVICE

16. Public Packet Data Network (Cont'd)

16.7 Asynchronous Transfer Mode Cell Relay Access Service (ATM-CRS) (N)

16.7.4 Rate Regulations (Cont'd)

(B) Types of Rates and Charges (Cont'd)

(2) Nonrecurring Charges (Cont'd)

(b) Service Rearrangements (Cont'd)

Administrative changes will be made without charge(s) to the customer. Administrative changes are as follows:

- Change of customer name,
- Change of customer or customer's end user premises address when the change of address is not a result of physical relocation of equipment,
- Change in billing data (name, address, or contact name or telephone number),
- Change of agency authorization,
- Change of customer circuit identification,
- Change of billing account number,
- Change of customer or customer's end user contact name or telephone number, and
- Change of jurisdiction
-

(c) Moves

A move involves a change in the physical location of one of the following:

- The Point of Termination at the customer's premises
- The customer's premises (N)

ACCESS SERVICE

16. Public Packet Data Network (Cont'd)

16.7 Asynchronous Transfer Mode Cell Relay Access Service (ATM-CRS) (N)

16.7.4 Rate Regulations (Cont'd)

(B) Types of Rates and Charges (Cont'd)

(2) Nonrecurring Charges (Cont'd)

(c) Moves

The charges for moving ATM-CRS service components are dependent on whether the move is to a different location within the same building, to a different building within the same SWC, or to a different building in a different SWC. The charges specified below apply in addition to any applicable charges for moving the associated Special Access Services as specified in Section 7.2.3, preceding.

(i) Moves Within the Same Building

Port only interfaces (i.e., Basic UNI/NNI Ports), VPs and VCCs are not impacted when a customer moves its Point of Termination to a different location within the same building. The charge for moving an Ethernet-based UNI or Ethernet-based NNI Port within the same building will be an amount equal to one half of the nonrecurring (i.e., installation) charge for the port. There will be no change in the minimum period requirements. (N)

ACCESS SERVICE

16. Public Packet Data Network (Cont'd)

16.7 Asynchronous Transfer Mode Cell Relay Access Service (ATM-CRS) (N)

16.7.4 Rate Regulations (Cont'd)

(B) Types of Rates and Charges (Cont'd)

(2) Nonrecurring Charges (Cont'd)

(c) Moves

(ii) Moves To a Different Building Within the Same SWC Port only interfaces (i.e., Basic UNI/NNI Ports), VPs and VCCs are not impacted when a customer moves its Point of Termination to a different building within the same SWC. The move of an Ethernet-based UNI or Ethernet-based NNI Port will be treated as discontinuance and start of service. Associated nonrecurring (i.e., installation) charges will apply. New minimum period requirements will be established for the new services. The customer will also remain responsible for satisfying all outstanding minimum period charges for the discontinued service.

(iii) Moves to a Different Building in a Different SWC A move to a different building in a different SWC will be treated as a discontinuance and start of service of all associated ATM-CRS service components. Associated nonrecurring (i.e., installation) charges will apply. New minimum period requirements will be established for the new services. The customer will also remain responsible for satisfying all outstanding minimum period charges for the discontinued service. (N)

ACCESS SERVICE

16. Public Packet Data Network (Cont'd)

16.7 Asynchronous Transfer Mode Cell Relay Access Service (ATM-CRS) (N)

16.7.4 Rate Regulations (Cont'd)

(C) Minimum Periods

The minimum period for ATM-CRS service components provided to a customer and for which charges are applicable are:

- Twelve months for ATM-CRS Ports
- One month for ATM-CRS Virtual Paths and Virtual Circuit Channels (N)

ACCESS SERVICE

16. Public Packet Data Network (Cont'd)

16.8 Wholesale Digital Subscriber Line (DSL) Transport Service

16.8.1 General

Wholesale Digital Subscriber Line (DSL) Transport Service is a high-speed data access service that is made available to Network Service Providers for provision of high speed data and IP Protocol multicast video services to their customers. Wholesale DSL Transport Service is provided to the customer through connection to the Telephone Company DSL Access Service Connection Point. Connections to the DSL Access Service Connection Point may be available through a Telephone Company's Asynchronous Transfer Mode (ATM) connection under Section 16.7.4 or a Telephone Company High Capacity DSL Access Connection under Section under Section 7.10.3(E).

The Telephone Companies listed in the table below offer Wholesale DSL under this tariff section. The Telephone Companies offer Wholesale DSL with either an ATM connection or High Capacity DSL Access Connection or both as indicated by an "X" in the applicable column in the following table. Additionally, those Telephone Companies offering Video Wholesale DSL Service under this tariff section are indicated. (N) | (N)

(T) | (T)

Issuing Carriers Providing Wholesale DSL Under this Tariff Section	Offers Wholesale DSL through High Capacity DSL Access Connection	Offers Wholesale DSL through ATM-CRS NNI Port Connection	Offers Video Wholesale DSL Service
Smart City Telecommunications LLC d/b/a Smart City Telecom		X	
Concord Telephone Company	X		
Horry Telephone Cooperative, Inc.	X	X	X

(N)

ACCESS SERVICE

16. Public Packet Data Network (Cont'd)

16.8 Wholesale Digital Subscriber Line (DSL) Transport Service (Cont'd)

16.8.2 Service Description

(A) General (N)

Wholesale DSL Transport Service transports data traffic generated by a customer-provided DSL modem from and to the end user customer's Network Interface Device (NID) to and from the Telephone Company's Wholesale DSL Access Service Connection Point over existing Telephone Company local exchange service loops. To and from the DSL Access Service Connection Point, the traffic is transported from or to the customer's Network Service Provider via one of the methods described hereunder. The method or methods available from the Telephone Company offering Wholesale DSL under this tariff are indicated at Section 16.8.1 preceding. (C) (C)

(1) Telephone Company ATM Network (N)

Telephone Companies offering Wholesale DSL under this section who also offer ATM-CRS Access Service under Section 16.7 of this tariff offer transport of Network Service Provider traffic between the Network Service Provider's designated premises and the DSL Access Service Connection Point through Special Access High Capacity Services under Section 7.10 of this tariff connected to Telephone Company ATM-CRS Access Service NNI Port [1] at the Telephone Company's DSL Access Connection Point enabled for UBR or VBR transmission provided under Section 16.7.2 preceding. There are no additional charges for individual Virtual Paths or Virtual Circuits associated with the provision of Wholesale DSL Transport Service.

[1]Network-to-Network Interface Port. (N)

Certain material currently found on this page formerly appeared on Original Page 16-79

6315 Seabrook Road, Seabrook, Maryland 20706

ACCESS SERVICE

16. Public Packet Data Network (Cont'd)

16.8 Wholesale Digital Subscriber Line (DSL) Transport Service (Cont'd)

16.8.2 Service Description (Cont'd)

(A) General (Cont'd) (N)

(2) Telephone Company High Capacity DSL Access Connection

Telephone Companies offering Wholesale DSL Transport under this section who do not also offer ATM-CRS Access Service under Section 16.7 of this tariff offer transport of Network Service Provider traffic to the DSL Access Service Connection Point through Special Access High Capacity DSL Access Connection Service under Section 7.10 of this tariff. Additionally, Telephone Companies providing ATM-CRS Access Service may, where facilities permit, also offer transport of Network Service Provider traffic by Special Access High Capacity DSL Access Connection Service. (N)

(B) The designated end user premises location must be served by an existing Telephone Company provided exchange line facility. An exchange line facility is the serving wire center central office line equipment and all of the plant facilities up to and including the Telephone Company-provided NID. (C) (C)

(C) The connection speed or "sync rate" is between the NID at the end user's premises and the DSLAM. Actual data transfer or throughput may be lower than the sync-rate due to Internet congestion, server or router speeds, protocol overheads, end user use of multiple applications and other factors that may not be under the Telephone Company's control. (T)

(D) Wholesale DSL Transport Service will be provided subject to the availability and limitations of the Telephone Company Wire Centers and outside plant facilities. (T)

Certain material currently found on this page formerly appeared on Original Page 16-79.

ACCESS SERVICE

16. Public Packet Data Network (Cont'd)

16.8 Wholesale Digital Subscriber Line (DSL) Transport Service (Cont'd) (C)

16.8.2 Service Description (Cont'd)

(E) Wholesale DSL Access Service Diagrams

(1) ATM-CRS Network-to-Network Interface Port Connection

The following diagram depicts a generic view of the components of Wholesale DSL provided in combination with an ATM-CRS Network-to-Network Interface (NNI) Port.

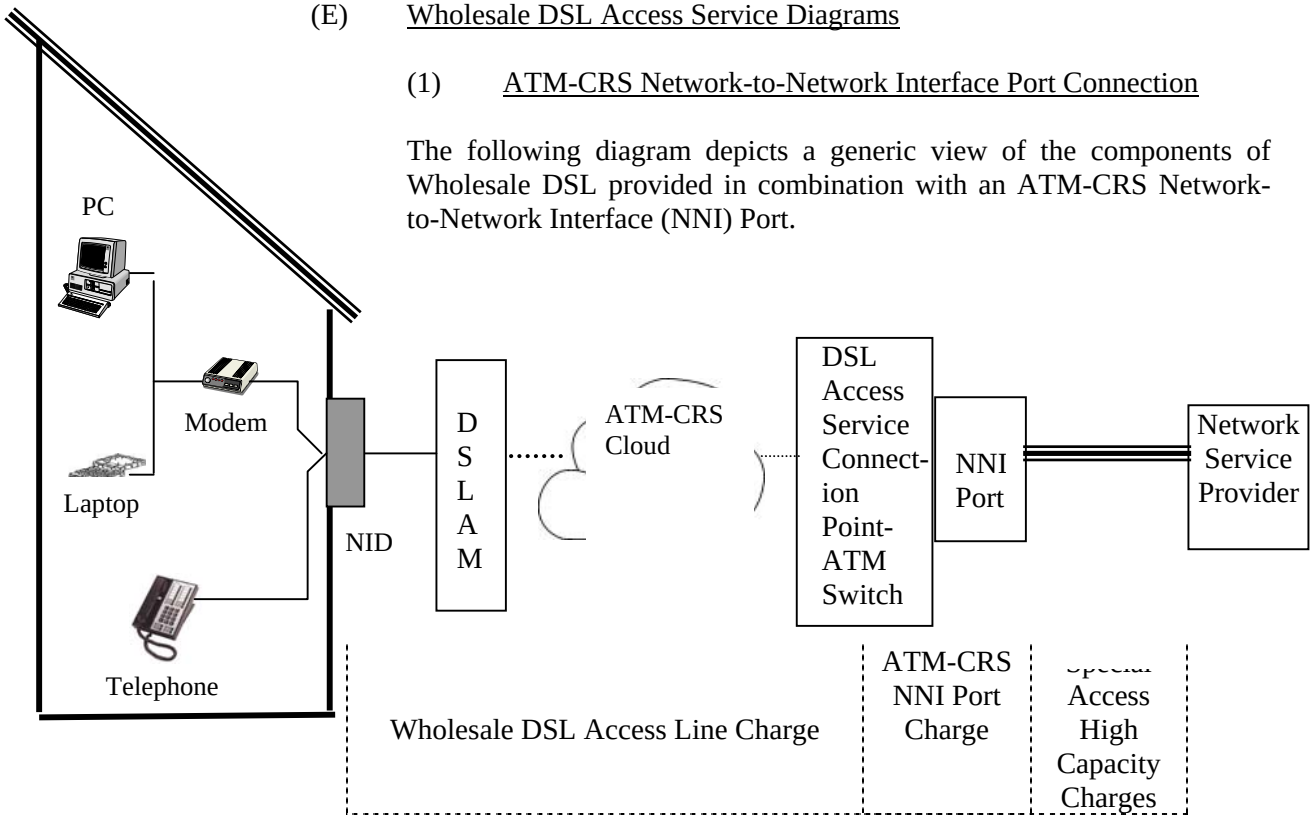

Monthly Recurring Charges

Wholesale DSL Access Line Charges for each end user connection.

ATM-CRS NNI Port Charge under Section 17.7 of this tariff.

Special Access High Capacity Charges:

for a Network Service Provider customer designated premises within the Telephone Company wire center in which DSL Access Connection Point is located, Channel Termination charge or charges under Section 7.10 of this tariff apply.

for a Network Service Provider customer designated premises outside of the Telephone Company wire center in which the DSL Access Connection Point is located, Channel Mileage (Channel Mileage Termination and Channel Mileage Facility) under Section 7.10 of this tariff apply.

In addition to other appropriate nonrecurring charges associated with each of the above rate elements, an ATM-CRS DSL Access Service Connection nonrecurring charge as described at Section 7.10(a) applies.

(C)

ACCESS SERVICE

16. Public Packet Data Network (Cont'd)

16.8 Wholesale Digital Subscriber Line (DSL) Transport Service (Cont'd) (N)

16.8.2 Service Description (Cont'd)

(E) Wholesale DSL Access Service Diagrams (Cont'd)

(2) Special Access High Capacity DSL Access Connection

The following diagram depicts a generic view of the components of Wholesale DSL provided in combination with Special Access High Capacity DSL Access Connection Service.

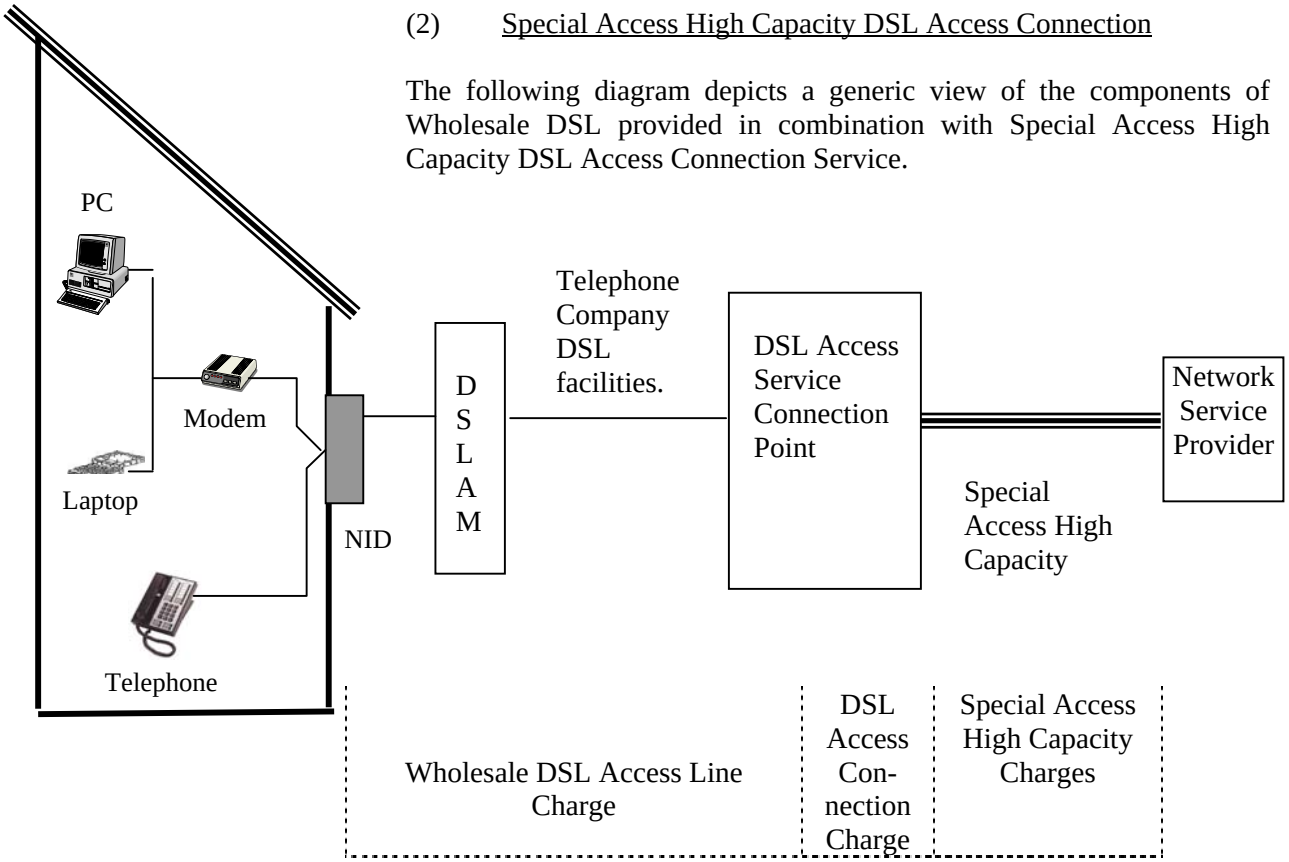

Monthly Recurring Charges

Wholesale DSL Access Line Charges for each end user connection.

ATM-CRS NNI Port Charge under Section 17.7 of this tariff.

Special Access High Capacity Charges:

for a Network Service Provider customer designated premises within the Telephone Company wire center in which DSL Access Connection Point is located, Channel Termination charge or charges under Section 7.10 of this tariff apply.

for a Network Service Provider customer designated premises outside of the Telephone Company wire center in which the DSL Access Connection Point is located, Channel Mileage (Channel Mileage Termination and Channel Mileage Facility) under Section 7.10 of this tariff apply.

In addition to other appropriate nonrecurring charges associated with each of the above rate elements, an ATM-CRS DSL Access Service Connection nonrecurring charge as described at Section 7.10(a) applies.

(N)

ACCESS SERVICE

16. Public Packet Data Network (Cont'd)

16.8 Wholesale Digital Subscriber Line (DSL) Transport Service (Cont'd)

16.8.3 Service Classes and Options

Wholesale DSL Transport Service is provided by the Telephone Company based on service class and service option.

(A) Service Classes

(1) Class I (C)

Class I Wholesale DSL Transport Service is a premium DSL Access Service that is designed to support critical operations and applications. Class I Wholesale DSL Transport Service is offered at a variety of speeds and is provisioned over a separate, dedicated data-only Telephone Company local exchange line facility. (C)

(2) Class II (C)

Class II Wholesale DSL Transport Service is designed to support affordable high speed Internet access for residential and business end users. The actual throughput achieved by Class II Wholesale DSL Transport Service is not guaranteed and may be affected by many factors, such as Internet congestion. Class II Wholesale DSL Transport Service may be provisioned over the end user's existing Telephone Company local exchange telephone service line utilized for voice communications. When provisioned over the end user's existing local exchange telephone service line, Class II Wholesale DSL Transport Service utilizes a centrally placed splitter or in-line filters to isolate the voice band service and equipment from the Wholesale DSL Transport Service and equipment. (C) (C)

ACCESS SERVICE

16. Public Packet Data Network (Cont'd)

16.8 Wholesale Digital Subscriber Line (DSL) Transport Service (Cont'd)

16.8.3 Service Classes and Options (Cont'd)

(A) Service Classes (Cont'd)

(3) Telephone Company Service Class Offerings.

The following table provides indication of whether the Telephone Company offering Wholesale DSL Transport Service provides the service under Class I, Class II or both classes.

Issuing Carriers Providing Wholesale DSL Under this Tariff Section	Class I	Class II
Smart City Telecommunications LLC d/b/a Smart City Telecom	X	X
Concord Telephone Company		X
Horry Telephone Cooperative, Inc.		X

(N)

(B) Service Options

Wholesale DSL Transport Service is available in the Downstream and Upstream options established by each Company offering Wholesale DSL Transport Service under this tariff section as indicated in the respective companies' rate section at Section 17 of this tariff. Each option offered by the Company shall specify the downstream and upstream speeds.

ACCESS SERVICE

16. Public Packet Data Network (Cont'd)

16.8 Wholesale Digital Subscriber Line (DSL) Transport Service (Cont'd)

16.8.4 DSL Provisioning

(A) Responsibility of the Telephone Company

(1) Wholesale DSL Transport Service will be provisioned over existing Telephone Company local exchange service lines or copper facilities.

(2) The Telephone Company will determine if the associated local exchange service line or copper facilities are suitable for use with the Wholesale DSL Transport Service option ordered by the customer. Service will not be provided on lines that are not suitable for Wholesale DSL Transport Service or on lines that produce interference with other services provided by the Telephone Company.

(3) The Telephone Company will provision and maintain Wholesale DSL Transport Service for the customer between the NID at the end user premises and the customer's ATM-CRS NNI Port or Special Access High Capacity DSL Access Connection Point. (C) | (C)

(4) The Telephone Company reserves the right to temporarily interrupt Wholesale DSL Transport Service for wire center or network maintenance, software updates, and in emergency situations.

ACCESS SERVICE

16. Public Packet Data Network (Cont'd)

16.8 Wholesale Digital Subscriber Line (DSL) Transport Service (Cont'd)

16.8.4 DSL Provisioning (Cont'd)

(B) Responsibility of the Customer (T)

(1) The customer is responsible for obtaining and installing compatible customer premises equipment (DSL modems and/or routers) used for connection to Telephone Company Wholesale DSL Transport Service.

(2) The customer is responsible for ensuring the continuing compatibility of CPE at the end user premises. The customer and/or end user shall be responsible for any expenses incurred for required changes to customer and/or end user equipment or facilities in order to make such equipment or facilities compatible with Telephone Company Wholesale DSL Transport Service.

(3) The customer is responsible for providing the Telephone Company with the necessary information to provision the Wholesale DSL Transport Service to its subscribers

(4) The customer ordering Wholesale DSL Transport Service on behalf if its subscriber(s) must obtain and maintain record of a letter of agency authorizing the customer to act as the agent of the end user subscriber. Upon request from the Telephone Company, the customer will provide the Telephone Company with a copy of the letter of agency.

(5) The customer must have connectivity to Telephone Company's ATM-CRS or Special Access High Capacity Service network where customer chooses to purchase Wholesale DSL Transport Service. The rates and charges for ATM Service or Special Access High Capacity Service are in addition to the rates and charges for Wholesale DSL Transport Service. (C) | (C)

ACCESS SERVICE

16. Public Packet Data Network (Cont'd)

16.8 Wholesale Digital Subscriber Line (DSL) Transport Service (Cont'd)

16.8.4 DSL Provisioning (Cont'd)

(B) Responsibility of the Customer (Cont'd) (T)

(6) The customer will obtain the appropriate authorization to allow the Telephone Company's employees or agents to enter the end user customer's designated premises at any reasonable hour for the purpose of installing, inspecting, repairing or removing the NID or drop associated with Wholesale DSL Transport Service.

(7) The customer is responsible for providing all customer support, marketing, billing, ordering and repair to and for its end users.

(8) The customer is responsible for all dealings with end user customers.

(9) The customer shall at all times be the customer of record with respect to all Services purchased hereunder and shall be responsible for payment to Telephone Company. Customer retains all responsibility for billing its end users and for any claim an end user may make concerning unauthorized billing.

ACCESS SERVICE

16. Public Packet Data Network (Cont'd)

16.8 Wholesale Digital Subscriber Line (DSL) Transport Service (Cont'd)

16.8.5 DSL Rate Regulations

(A) Rate Elements

Wholesale DSL Transport Service arrangements are available in varying options for the applicable service class based on the Downstream and Upstream speed combinations chosen by the customer. Rates include monthly recurring charges and nonrecurring charges due at the time of installation. (C)

(B) Changes

All changes to existing Wholesale DSL Transport Service (e.g., a change of Network Service Provider and restoral of the Wholesale DSL Transport Service following a disconnect for non-payment of charges and/or a disconnect of the associated local exchange service line for any reason), other than changes involving DSL Network Reconfigurations under Section 16.8.6(C) following and administrative activities, will be treated as a discontinuance of the existing service and an installation of a new service. A nonrecurring installation charge will apply per Wholesale DSL Transport Service line for this work activity.

The following administrative changes will be made without charge to the customer:

- Change of customer designated premises address when the change of address is not a result of a physical relocation of equipment,
- Change in billing data (name, address or contact name or telephone),
- Change of billing account number,
- Change of agency authorization that requires no changes to the Telephone Company's network,
- Change of customer contact name or telephone number, and
- Change of jurisdiction.

ACCESS SERVICE

16. Public Packet Data Network (Cont'd) (N)

16.8 Wholesale Digital Subscriber Line (DSL) Transport Service (Cont'd)

16.8.5 DSL Rate Regulations (Cont'd)

(C) Wholesale DSL Network Reconfiguration Charge

A Wholesale DSL Network Reconfiguration Charge applies when the Wholesale DSL Transport Service customer requests the Telephone Company to modify the Telephone Company's network to: 1) accommodate a change in the Wholesale DSL Transport Service end user's existing IP address or 2) limit the data speed delivered over the end user's existing Wholesale DSL Transport Service line. This charge applies for each request per Wholesale DSL Transport Service line. The Telephone Company will bill the Wholesale DSL Network Reconfiguration Charge to the Network Service Provider. The Wholesale DSL Transport Service Charge is set forth in Section 17.4.8.4 following

(D) Line Conditioning

Line conditioning is available, at no charge, and may be required if the facility will not accommodate DSL technology. This may include, but is not limited to, the removal of load coils, bridge taps and/or repeaters. The Telephone Company does not warrant that line conditioning will permit the provision of DSL technology.

(E) Minimum Period

The minimum service period for Wholesale DSL Transport Service provided on a month-to-month basis is one (1) month. If the Wholesale DSL Transport Service line is disconnected prior to the end of the minimum service period, the customer will be assessed all applicable monthly recurring rates for the remainder of the minimum service period. (N)

ACCESS SERVICE

16. Public Packet Data Network (Cont'd)

16.8 Wholesale Digital Subscriber Line (DSL) Transport Service (Cont'd) (N)

16.8.5 DSL Rate Regulations (Cont'd)

(F) Moves

A move involves a change in the physical location of one of the following:

- The Point of Termination at the Wholesale DSL Transport Service customer designated premises
- The Wholesale DSL Transport Service customer designated premises

The charges for the move are dependent on whether the move is to a new location within the same building or to a different building.

(1) Moves Within the Same Building

When the move is to a new location within the same building, the charge for the move will be an amount equal to one half of the nonrecurring (i.e., installation) charge for the Wholesale DSL Transport Service affected. There will be no change in the minimum period requirements. This charge is in addition to the Access Order Charge as specified in Section 17.4.1(A) following for Special Access.

(2) Moves To a Different Building

Moves to a different building will be treated as a discontinuance and start of service and all associated nonrecurring charges will apply. New minimum period requirements will be established for the new services. The customer will also remain responsible for satisfying all outstanding minimum period charges for the discontinued service. (N)

ACCESS SERVICE

16. Public Packet Data Network (Cont'd)

16.8 Wholesale Digital Subscriber Line (DSL) Transport Service (Cont'd) (N)

16.8.6 DSL Rate Regulations (Cont'd)

(G) Term and Volume Discount Plan (TVDP)

(1) General Description

The Wholesale DSL Transport Service Term and Volume Discount Plans (TVDP) provide customers Wholesale DSL Transport Services at discounted rates based on commitments of minimum volumes (Volume Commitment Levels) over a specific term (TVDP Term Commitments). The TVDP encompasses all of a customer's DSL services for the same TVDP Term Commitment term.

Two TVDP Terms Commitment terms are available. Wholesale DSL Transport Service customers may select one of the following TVDP Term Commitment terms:

One-Year TVDP Term Commitment
Three-Year TVDP Term Commitment

Rates applicable to Wholesale DSL Transport Service ordered under a One-Year TVDP Term Commitment, a nonrecurring charge and monthly recurring rate will apply per DSL arrangement as set forth in Section 17.4.8.4(B) following. Rates applicable to Wholesale DSL Transport Service ordered under a Three-Year TVDP Term Commitment, a nonrecurring charge and monthly recurring rate will apply per DSL arrangement as set forth in Section 17.4.8.4(C) following. (N)

ACCESS SERVICE

16. Public Packet Data Network (Cont'd)

16.8 Wholesale Digital Subscriber Line (DSL) Transport Service (Cont'd) (N)

16.8.5 DSL Rate Regulations (Cont'd)

(G) Term and Volume Discount Plan (TVDP) (Cont'd)

(1) General Description (Cont'd)

For Telephone Companies offering Wholesale DSL Transport Service under this section, the DSL Volume Commitments for rates will be indicated in the Telephone Company's respective rate section at Section 17.4

Each of the Volume Commitment Levels has minimum line volumes assigned for each year of the TVDP. The Volume Commitment Level line volumes include all of the in-service DSL lines provided by the Telephone Company to the customer for the committed term, including both Business Class lines and Residence Class lines. For purposes of meeting the Volume Commitment Level under a TVDP Term Commitment, DSL lines include the aggregate of DSL access lines for all Downstream/Upstream Speed Options described in the Telephone Company's respective rate section.

The service year will begin on the service anniversary date, which is defined as the date on which the customer places its order for a TVDP and designates the commitment level and term. Each service year runs 12 months from its service anniversary date. (N)

ACCESS SERVICE

16. Public Packet Data Network (Cont'd)

16.8 Wholesale Digital Subscriber Line (DSL) Transport Service (Cont'd) (N)

16.8.5 DSL Rate Regulations (Cont'd)

(G) Term and Volume Discount Plan (TVDP) (Cont'd)

(1) General Description (Cont'd)

The commitment level must be reached in accordance with the following schedule:

Term	Grace Period
1 year	6 months
3 years	12 months

At expiration of the TVDP, the customer may choose a new TVDP, convert to the month-to-month rates, or continue with the rates, charges, terms and conditions and commitment level in effect at the end of the expiring TVDP on a year-to-year basis. A conversion to a new TVDP or to month-to-month rates, or discontinuance, will require that the customer submit a service change order.

The minimum service period for Wholesale DSL Transport Service provided under a TVDP is one (1) month. If the Wholesale DSL Transport Service is disconnected prior to the end of the minimum service period, the customer will be assessed all applicable monthly recurring rates for the remainder of the minimum service period.

TVDP customers will be subject to shortfall liability charges for missed annual commitments and/or termination liability charges for early termination as set forth in (3) and (4) following. (N)

ACCESS SERVICE

16. Public Packet Data Network (Cont'd)

16.8 Wholesale Digital Subscriber Line (DSL) Transport Service (Cont'd) (N)

16.8.5 DSL Rate Regulations (Cont'd)

(G) Term and Volume Discount Plan (TVDP) (Cont'd)

(2) Annual Review

The commitment level is reviewed at the end of each service year on the service anniversary date. A count is taken of all DSL lines in service provided to the customer under this tariff, as of the last day of the service year. Customers who do not meet the minimum quantity of in-service lines for their commitment level on such date will be notified by the Telephone Company.

The commitment levels will be reviewed after each grace period and monthly thereafter. If the commitment levels are not reached within the grace period, the customer shall be assessed a shortfall liability charge.

Customers subscribing to either a One-Year or Three-Year TVDP Term Commitment with Volume Commitment Level 2 or 3 who have fewer than the minimum DSL lines for the applicable Volume Commitment Level will be reassigned to a reduced Volume Commitment Level based on the number of DSL lines provided by the Telephone Company to the customer at the time of the count. Once the number of DSL lines reaches the minimum level for a higher Volume Commitment Level, the customer will be reassigned to the higher Volume Commitment Level. (N)

ACCESS SERVICE

16. Public Packet Data Network (Cont'd)

16.8 Wholesale Digital Subscriber Line (DSL) Transport Service (Cont'd) (N)

16.8.5 DSL Rate Regulations (Cont'd)

(G) Term and Volume Discount Plan (TVDP) (Cont'd)

(2) Annual Review (Cont'd)

At the end of any service year, a customer may elect to move to a higher Volume Commitment Level if it has met the minimum line volume for its existing Volume Commitment Level. The election may be for a higher Volume Commitment Level within the customer's existing TVDP Term Commitment or a within a longer TVDP Term Commitment. The election may be for the next service year and for the remainder of the existing TVDP Term Commitment. However, should the customer fail to meet the minimum line volume for the higher Volume Commitment Level by the end of the service year following such election, the shortfall liability will be assessed as set forth in (3) following.

(3) Shortfall Liability

Shortfall liability applies to any TVDP customer with Volume Commitment Level 2 or 3 that fails to meet the minimum line volumes for its designated Volume Commitment Level. Shortfall liability is based on the difference between the monthly rate for the designated Volume Commitment Level and the monthly rate for the Volume Commitment Level that should have been charged based upon the actual quantity of in-service DSL lines at the end of the service period. The shortfall liability is equal to the difference in monthly rate multiplied by the sum of all lines in service at the end of each month during such service period. For example, a customer subscribed to a Three-Year TVDP Term Commitment with Volume Commitment Level 3 that has only 70 lines in-service at the end of year 2 will be assessed the difference in the monthly rates between Volume Commitment Level 3 and Volume Commitment Level 2 for each line in service at the end of each month during the service year. (N)

ACCESS SERVICE

16. Public Packet Data Network (Cont'd)

16.8 Wholesale Digital Subscriber Line (DSL) Transport Service (Cont'd) (N)

16.8.5 DSL Rate Regulations (Cont'd)

(G) Term and Volume Discount Plan (TVDP) (Cont'd)

(4) Termination Liability

A customer may terminate a TVDP without termination liability or shortfall liability charges if a Telephone Company initiated rate increase causes the customer's rates to increase at any time during the term of the existing TVDP. Subsequent to a rate increase, customers must either elect to terminate the TVDP within, or continue the TVDP at the new rate.

If the customer elects to discontinue its TVDP prior to the end of the commitment period, and there has been no rate increase affecting customer's Wholesale DSL Transport service during the preceding thirty (30) days, the customer will be subject to termination charges.

(a) For customers electing to terminate a Three-Year TVDP Term Commitment after one year but prior to completion of the three-year term, the termination charges shall be equal to the difference between charges assessed at the One-Year TVDP Term Commitment rate for the applicable Volume Commitment Level achieved by the customer and charges assessed at the Three-Year TVDP Term Commitment rate for the applicable Volume Commitment Level for the customer for all months from the beginning of the three-year term and the end of the month in which service is terminated. (N)

ACCESS SERVICE

16. Public Packet Data Network (Cont'd)

16.8 Wholesale Digital Subscriber Line (DSL) Transport Service (Cont'd) (N)

16.8.5 DSL Rate Regulations (Cont'd)

(G) Term and Volume Discount Plan (TVDP) (Cont'd)

(4) Termination Liability (Cont'd)

(b) For customers electing to terminate a Three-Year TVDP Term Commitment prior to completion of the first year of the three-year term, the termination charges shall be equal to the difference between charges assessed at the month-to-month rate set forth in Section 17.4.8.4(A) following and charges assessed at the Three-Year TVDP Term Commitment rate for the applicable Volume Commitment Level for the customer for all months from the beginning of the three-year term to the end of the month in which service is terminated.

(c) For customers electing to terminate a One-Year TVDP Term Commitment prior to completion of the one-year term, the termination charges shall be equal to the difference between charges assessed at the month-to-month rate set forth in Section 17.4.8.4(A) following and charges assessed at the One-Year TVDP Term Commitment rate for the applicable Volume Commitment Level for the customer for all months from the beginning of the one-year term to the end of the month in which service is terminated. (N)

ACCESS SERVICE

16. Public Packet Data Network (Cont'd)

16.8 Wholesale Digital Subscriber Line (DSL) Transport Service (Cont'd) (N)

16.8.5 DSL Rate Regulations (Cont'd)

(G) Term and Volume Discount Plan (TVDP) (Cont'd)

(5) TVDP Upgrades

Except as provided in 16.8.6(G)(4) preceding, the customer may choose to terminate an existing TVDP prior to the end of the TVDP Term Commitment and order a new TVDP without termination liability provided the new TVDP meets the following requirements:

- the new TVDP must represent TVDP Term Commitment greater than or equal to the previous TVDP Term Commitment,

- the new TVDP must represent a Volume Commitment Level greater than or equal to the previous TVDP, and

- the new TVDP must be based upon the rates that are currently in effect and available to all customers.

When the customer upgrades to a TVDP with a greater TVDP Term Commitment, the new TVDP will begin in month one and no credit will be given for the actual time in service for the original TVDP. Lines in service at the time of conversion to the new agreement will apply to the Volume Commitment Level selected in the new agreement.

Customers upgrading to a new TVDP will be subject to a Special Access Order Charge under Section 17.4.1(D).

(N)

ACCESS SERVICE

16. Public Packet Data Network (Cont'd)

16.8 Wholesale Digital Subscriber Line (DSL) Transport Service (Cont'd) (N)

16.8.5 DSL Rate Regulations (Cont'd)

(H) Video Wholesale DSL (VWDSL) Service

Where suitable facilities exist, a customer that requires the ability to send high-speed video transmission may order Video Wholesale Digital Subscriber Line (VWDSL) Service as an optional function under Wholesale DSL Transport Service. VWDSL Service comprises two paths within the Telephone Company's Wholesale DSL network. The first path is a Multi-Cast Virtual Path (MCVP) connected to the Telephone Company's Wholesale DSL network at the DSL Access Connection Point through an ATM-CRS port and continuing through the Telephone Company's ATM-CRS network to the Multicast aggregation points at the Digital Subscriber Line Access Multiplexers (DSLAMs) or similar Telephone Company broadband multiplexer equipment serving end user customers. The second path is a Virtual Path from the DSLAM or similar broadband multiplexer equipment to the premises of the end user customer.

Customers may order VWDSL Service for both end user customers for whom the Customer has also ordered Wholesale DSL Transport Service and for end user customers who wish to receive video only.

The diagram on the following page depicts the Telephone Company's Wholesale DSL network with respect to the provision of VWDSL. (N)

ACCESS SERVICE

16. Public Packet Data Network (Cont'd)

16.8 Wholesale Digital Subscriber Line (DSL) Transport Service (Cont'd) (N)

16.8.5 DSL Rate Regulations (Cont'd)

(H) Video Wholesale DSL (VWDSL) Service (Cont'd)

Video Wholesale DSL Network

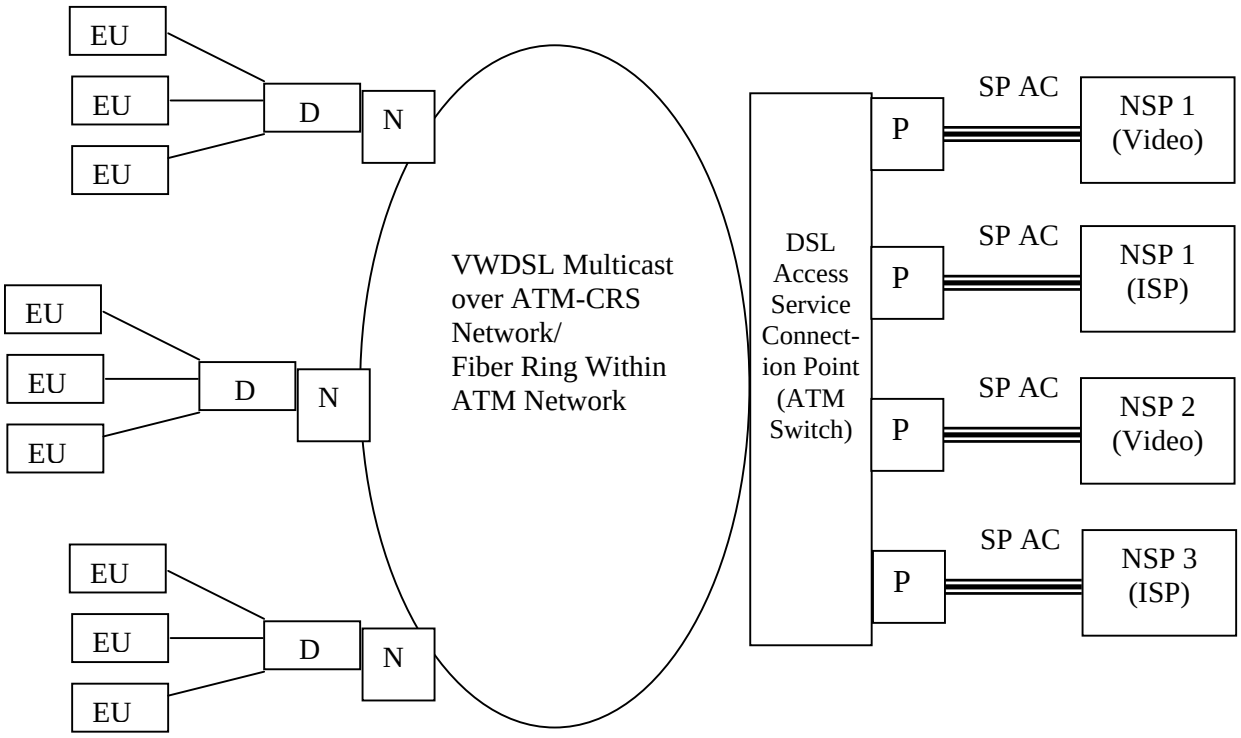

NSP	Network Service Provider	N	Optical Node
SP AC	Special Access	D	DSLAM /Multicast Aggregation Point
P	ATM-CRS NNI Port	EU	End User Customer
NNI	Network-to-Network Interface		

(N)

ACCESS SERVICE

16. Public Packet Data Network (Cont'd)

16.8 Wholesale Digital Subscriber Line (DSL) Transport Service (Cont'd) (N)

16.8.5 DSL Rate Regulations (Cont'd)

(H) Video Wholesale DSL (VWDSL) Service (Cont'd)

(1) VWDSL Rate Elements

The following rate elements apply to VWDSL in lieu of Wholesale DSL Access Line charges described above at 16.8.2(E).

(a) VWDSL Multicast Virtual Path

The Telephone Company's Wholesale DSL Network delivers video data to DSLAMs by ATM-CRS technology carried over a synchronous optical channel network comprising part of the Telephone Company's ATM-CRS network. Because the synchronous optical channel network utilizes a ring configuration, the Telephone Company employs technology that allows a single Virtual Path to deliver one programming channel to all DSLAMs connected to the Telephone Company's ATM-CRS network. The video data both "drops off" and "continues."

The Customer must order one VWDSL-Multicast Virtual Path for each channel of programming that the Customer may provide, including both scheduled programming, and where facilities support, "Video On Demand" services. Each VWDSL-Multicast Virtual Path will support up to a maximum of three Mbps of data. (N)

ACCESS SERVICE

16. Public Packet Data Network (Cont'd)

16.8 Wholesale Digital Subscriber Line (DSL) Transport Service (Cont'd) (N)

16.8.5 DSL Rate Regulations (Cont'd)

(H) Video Wholesale DSL (VWDSL) Service (Cont'd)

(1) VWDSL Rate Elements (Cont'd)

(b) VWDSL Access Line Charge

The VWDSL Access Line Charge recovers the cost of provision by the Telephone Company of a Virtual Path between the DSL Access Connection Point and the end user customer premises. The maximum downstream speed of data is 9 Mbps from the DSL Access Connection Point to the end user customer premises. The maximum upstream speed of data is 128 kbps from the end user customer premises to the DSL Access Connection Point.
The VWDSL Access Line Charge only applies to WDSL Access lines serving end user customers who are not also served by WDSL Transport Service subject to the WDSL Access Line Charge.

(c) ATM-CRS NNI Port Charge

Customers ordering VWDSL Service must also order appropriate ATM-CRS NNI Ports under Section 16.7 of this tariff. Additionally, Customers must order appropriate Special Access channel termination(s) or channel mileage facilities and terminations under Section 7 of this tariff.

(2) Term and Volume Discount Plan (TVDP)

The Term and Volume Discount Plant (TVDP) provisions of Section 16.8.5(G) above apply to VWDSL Service. For purposes of volume discounts, all lines subject to the VWDSL Access Line Charge shall be included in determination of the volume level for purposes of both WDSL Transport Service and VWDSL Service. (N)

ACCESS SERVICE

16. Public Packet Data Network (Cont'd)

16.8 Wholesale Digital Subscriber Line (DSL) Transport Service (Cont'd) (N)

16.8.5 DSL Rate Regulations (Cont'd)

(H) Video Wholesale DSL (VWDSL) Service (Cont'd)

Video Wholesale DSL (VWDSL) Service Rate Application Diagram

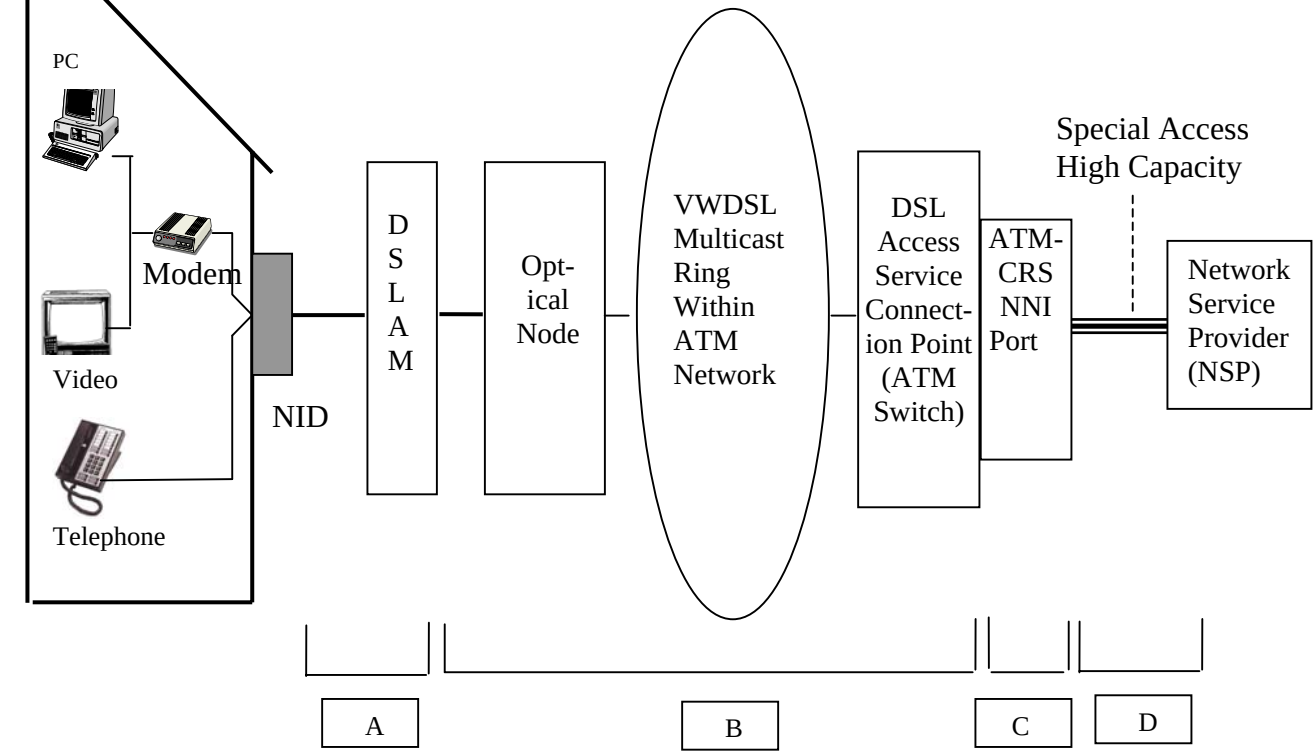

A VWDSL Access Line Charge (per subscriber)

B VWDSL Multicast Virtual Path Charge (per programming channel)

C ATM-CRS Network to Network Interface (NNI) Charge

D Special Access High Capacity Channel Termination Charge for NSPs located within Telephone Company exchange associated with wire center for DSL Access Service Connection Point or Channel Mileage (Termination and Facility) Charges for NSPs located outside exchange associated with wire center for DSL Access Service Connection Point. (N)