8. ADVANCED COMMUNICATIONS NETWORKS

ALPHABETICAL BY SUBJECT **PAGE**

ATM Service 8-316
Pricing Plans 8-336
Rate Elements 8-333
Rates and Charges 8-340
Rates and Charges (Grandfathered) 8-400
Regulations 8-332

Changes of Service 8-3

Frame Relay Service 8-74
Pricing Plans 8-91
Rate Elements 8-87
Rates and Charges 8-106
Regulations 8-85

Grandfathered Advanced Communications Networks Services ..... 8-453 (N)
Local Area Network Switching Service ..... 8-454 (N)
General 8-1
Changes of Service 8-3
Moves 8-2
Order Modifications 8-1
Prepayment Discount 8-17
Promotions 8-18
Special Construction 8-1
Spread of Nonrecurring Charges 8-15
Termination Liability and Waiver Policy 8-5

Local Area Network Switching Service 8-429
Pricing Plans 8-433
Rate Elements 8-432
Rates and Charges 8-434

8. ADVANCED COMMUNICATIONS NETWORKS

ALPHABETICAL BY SUBJECT **PAGE**

Metro Optical Ethernet ..... 8-452.1 (N)
Pricing Plans 8-452.4
Rate Elements 8-452.3
Rates and Charges ..... 8-452.6 (N)
Modem Aggregation Service (Grandfathered) 8-447
Pricing Plans 8-450
Rate Elements 8-449
Rates and Charges 8-451
Moves 8-2

Order Modifications 8-1

Promotions 8-18
Public Packet Switching Network 8-41
Pricing Plans 8-58
Rate Elements 8-51
Rates and Charges 8-61
Regulations 8-49

QWEST DSL Service 8-288
Pricing Plans 8-304
Rate Elements 8-301
Rates and Charges 8-306
Regulations 8-298

Special Construction 8-1

Termination Liability and Waiver Policy 8-5

8. ADVANCED COMMUNICATIONS NETWORKS

8.1 GENERAL

Advanced Communications Networks (ACS) consist of the Public Packet Switching Network (PPSN), Frame Relay Service (FRS), *QWEST DSL* Service, ATM Service, LAN Switching Service (LSS) and Metro Optical Ethernet (MOE). (C) (C)

8.1.1 SPECIAL CONSTRUCTION

FRS and ATM Service will be available at Company Service Point locations. The offering of FRS, *QWEST DSL* Service, ATM Service, LSS and MOE contemplates the use of existing facilities. There may be occasions when the service is not available due to facility limitations, or where it may be necessary to construct such facilities as either normal or Special Construction. If Special Construction is involved, the regulations as set forth in Tariff F.C.C. No. 2 apply. (C)

8.1.2 ORDER MODIFICATIONS

PPSN, FRS, *QWEST DSL* Service, ATM Service, LSS and MOE are ordered under the Access Order provisions as set forth in Section 5, preceding. (C)

8. ADVANCED COMMUNICATIONS NETWORKS

8.1 GENERAL (T)(M)

8.1.3 MOVES (Cont'd) (T)

A move involves a change in the physical location of one of the following:

- The network interface at the customer's premises
- The customer's premises

The charges for the move are dependent upon whether the move is to a new location within the same building or to a different building.

A. Moves Within the Same Building (T)

When the move is to a new location within the same building, the charge for the move will be an amount equal to one-half of the nonrecurring charge for the service termination affected. There will be no change in the minimum period requirements.

B. Moves to a Different Building (T)

Moves to a different building will be treated as a discontinuance and start of service and all associated nonrecurring charges will apply. New minimum period requirements will be established for the moved services. The customer will also remain responsible for satisfying all outstanding minimum period charges for the discontinued service. Moves to a different building for FRS customers may be eligible for portability, as described in 8.3.4.F., following. (T)

As of May 29, 1995 moves to a different building with an upgrade in transmission (T) speed for customers subscribing to pricing plans in this Section will be subject to the Termination Liability and Waiver Plan as set forth in 8.1.5. FRS customers (T) who subscribe to Pricing Plans in effective as of November 14, 1994 and who move to a different building, may be eligible for the phased-in installation rates and charges regulations as set forth in 8.3.4.B., following. (T)(M)

Certain material on this page formerly appeared on Page 8-45.
Certain material previously found on this page can now be found on Page 8-41.

8. ADVANCED COMMUNICATIONS NETWORKS

8.1 GENERAL (Cont'd)

8.1.4 CHANGES OF SERVICE

The following rearrangements and changes apply to Frame Relay Service (FRS), *QWEST DSL* Service ATM Service and MOE. (C)

A. Service Rearrangements

Service rearrangements are changes to existing service which do not result in a change in the physical location of the network interface. Changes in the physical location of the network interface are treated as moves as described in 8.3.2.A.

1. For additions to existing service, nonrecurring charges associated with the added service element will apply.

2. Related monthly rates and nonrecurring charges for addition(s) to service are the rates and charges in effect at the time of the addition(s).

3. With the exception of PVCs, VCCs, and VPCs, an addendum to the existing fixed period plan is required when service elements are added to an existing fixed period plan. PVCs, VCCs, and VPCs may be added to existing fixed period plans on a month-to-month basis without an addendum to the existing fixed period plan.

4. When PVCs are added to an existing FRS, or VCCs or VPCs are added to an existing ATM Service, the minimum period is one month.

5. A subsequent PVC, VCC or VPC order charge, as set forth in 8.3.2.A. and 8.5.2.A. will apply to add or change PVC, VCC or VPC assignments.

8. ADVANCED COMMUNICATIONS NETWORKS

8.1 GENERAL
8.1.4 CHANGES OF SERVICE (Cont'd)

B. Administrative Changes

Administrative changes to existing service will be made without charge(s) to the customer. Administrative changes are as follows:

- Change of customer name; i.e., the customer of record does not change but rather the customer of record changes its name; e.g., XYZ Company to XYZ Communications,
- Change of customer premises address when the change of address is not a result of a physical relocation of facilities,
- Change in billing data (name, address, or contact name or telephone number),
- Change of customer contact name or telephone number,
- Change of customer service element identification, and
- Change in jurisdiction for FRS, *QWEST DSL* Service, ATM Service, LSS and MOE. (C) (C)

8. ADVANCED COMMUNICATIONS NETWORKS

8.1 GENERAL (Cont'd) (T)(M)

8.1.5 TERMINATION LIABILITY AND WAIVER POLICY (T)

A. General

Termination Liability and Waiver Policy provides the terms and conditions for customers subscribing to Pricing Plans as set forth in each Pricing Plan. As of May 29, 1995 new customers subscribing to ACS Pricing Plans are subject to the Termination Liability and Waiver Policy terms and conditions in lieu of the Discontinuance Charges, Portability (except for FRS Portability without upgrade in transmission speed, as set forth in 8.3.4.F.) and Upgrades in Service and Transmission Speed as set forth in the Pricing Plans. Customers with Pricing Plans in service prior to May 29, 1995 may utilize the terms and conditions of their pricing plans and portability or the Termination Liability and Waiver Policy. This offer is valid until either the expiration date of their existing term or until the expiration of the respective terms, as set forth in the pricing plans, whichever comes first. (T) (T) (T) (T)

If the customer chooses to discontinue all or a portion of the service prior to the expiration of the fixed period, termination charges, as set forth in B., following, will apply. (M)

Certain material on this page formerly appeared on Page 8-103.
Certain material previously found on this page can now be found on Page 8-44.

8. ADVANCED COMMUNICATIONS NETWORKS

8.1 GENERAL
8.1.5 TERMINATION LIABILITY AND WAIVER POLICY (Cont'd)

B. Termination Liability

Customers with Pricing Plans in service prior to August 12, 1997, will retain a Termination Liability of 15% and the minimum billing level requirement of 80% of the total monthly rates for the service, until the expiration of their existing fixed period.

If a customer chooses to discontinue the entire service or a portion of the service prior to the expiration of the fixed period service, termination charges apply (unless the customer satisfies the conditions specified in the Waiver Policy as set forth in C., following).

The minimum billing level is used to calculate the termination charge. The minimum billing level for Packet Switching, MAS, *QWEST DSL* Service (i.e., *QWEST DSL*, *QWEST IDSL* or *QWEST DSL HOST*), LSS and MOE is 100% of the total monthly rates for the rate elements being discontinued. An exception for *QWEST IDSL* exists when this service is upgraded to *QWEST DSL* at the same address of record, the termination charge does not apply. The minimum billing levels for Frame Relay and ATM Service are as follows: (C)

1. Frame Relay

a. Standard Minimum Billing Level

The Standard Minimum Billing Level (SMBL) for Frame Relay is 100% of the monthly rates for the rate elements being discontinued, except for the FRS User-To-Network Information Transfer (UNIT) or Network-To-Network Information Transfer (NNIT). The minimum billing level for the UNIT or NNIT is 100% of the monthly rate for a UNIT or NNIT with 1 PVC, based on the customer's existing fixed period service rate plan and the speed of the associated UNIT or NNIT.

8. ADVANCED COMMUNICATIONS NETWORKS

8.1 GENERAL (T)(M)

8.1.5 TERMINATION LIABILITY AND WAIVER POLICY (T)

B.1. (Cont'd)

b. Optional Minimum Billing Level

The Optional Minimum Billing Level (OMBL) for Frame Relay Service (FRS) is a plan that gives eligible customers the flexibility to remove and add circuits within Company territory without incurring a Termination Liability Assessment (TLA) as long as they stay at or above their TLA threshold level. Eligible customers who subscribe to this option must designate at the time they subscribe to a fixed period service rate plan which of their FRS recurring revenue will be part of OMBL and which will remain on SMBL. As new FRS is installed, the customer must determine whether to include the new service in the OMBL or SMBL.

A customer may have two or more OMBL fixed period service rate plans in effect at the same time.

- Eligibility Requirements:

  - Must have an annual projected FRS revenue of $100,000 or more that will be committed to each OMBL fixed period service rate plan at the time it is established. Determination of the revenue commitment for the first year will be calculated by multiplying the customer's current month FRS revenue by 12.

  - Must subscribe to a fixed period service rate plan of 36 months or greater for the OMBL FRS and its designated circuits. (M)

Certain material on this page formerly appeared on Page 8-105.
Certain material previously found on this page can now be found on Page 8-46.

8. ADVANCED COMMUNICATIONS NETWORKS

8.1 GENERAL (T)(M)

8.1.5 TERMINATION LIABILITY AND WAIVER POLICY

B.1.b. (Cont'd) (T)

- Terms and Conditions:

  - Only FRS recurring (whole and partial month) revenues and associated adjustments of these amounts will be used to calculate the annual revenue commitment.

  - The FRS Minimum Service Period (MSP) as set forth in 8.3.4.B., preceding, applies. The MSP starts with the installation date of each circuit. Should the customer disconnect the circuit prior to the completion of the MSP of six months (PVCs excepted), TLA will apply to the months remaining in the MSP. TLA will not apply beyond the initial six month period. (T) (T) (T)

  - All new circuits added will be co-terminous with the termination date of the OMBL fixed period service rate plan with which they are associated. (M)

Certain material on this page formerly appeared on Page 8-105.
Certain material previously found on this page can now be found on Page 8-47.

8. ADVANCED COMMUNICATIONS NETWORKS

8.1 RATE REGULATIONS (T)(M)

8.1.5 TERMINATION LIABILITY AND WAIVER POLICY

B.1.b. (Cont'd) (T)

- TLA Threshold

  The threshold amount will be determined as follows:

  - In the first year of the fixed period service rate plan, the threshold will be 80% of the customer's revenue commitment at the time the OMBL fixed period service rate plan is established.

  - For subsequent years of the fixed period service rate plan, the threshold level will be 80% of the previous year's actual revenue, or the threshold of the previous year, whichever is greater.

  - For any year the customer's actual revenue falls below the threshold the TLA threshold for the next year will become 80% of the previous year's actual revenue.

- Annual Verification

  The OMBL will be validated annually on the anniversary of its establishment date. When the customer's annual revenue exceeds their threshold TLA will not be assessed. When the customer's annual revenue falls below their threshold, a Shortfall Calculation will be made as follows. (T) (M)

Certain material on this page formerly appeared on Page 8-106.
Certain material previously found on this page can now be found on Page 8-49.

8. ADVANCED COMMUNICATIONS NETWORKS

8.1 RATE REGULATIONS (T)(M)

8.1.5 TERMINATION LIABILITY AND WAIVER POLICY

B.1.b. (Cont'd) (T)

- Shortfall Calculation

  In the event the customer's annual revenue falls below the threshold then a TLA will be calculated as follows:

  - (25%) x (Revenue Shortfall (TLA threshold – actual revenue)) x (number of years remaining in the fixed period service rate plan).

  - Example: Assume a customer has an annual revenue commitment of $200,000 and a corresponding TLA threshold of $160,000 (80% of the annual revenue commitment). The OMBL recurring FRS revenue billed for the 3rd year of a 60 month fixed period service rate plan is $140,000. The TLA would be calculated as follows:

    (25%) x ($20,000 ($160,000 - $140,000)) x (2) = $10,000

    In addition, the TLA threshold for year 4 would be adjusted downward from $160,000 (80% of $200,000) to $112,000 (80% of $140,000). (M)

Certain material on this page formerly appeared on Page 8-107.
Certain material previously found on this page can now be found on Page 8-48.

8. ADVANCED COMMUNICATIONS NETWORKS

8.1 RATE REGULATIONS

8.1.5 TERMINATION LIABILITY AND WAIVER POLICY

B. Termination Liability (Cont'd)

2. Minimum Billing Level for ATM Service

The minimum billing level for ATM Service is 100% of the monthly rates for the rate elements being discontinued, except the Cell Transfer service elements. The minimum billing level for the Cell Transfer service elements is 100% of the Cell Transfer Fixed monthly rate, plus the monthly rate for a CBR, VBR-rt, VBR-nrt, ABR or UBR Incremental Cell Transfer of 64 kbps on a 1.544 Mbps port, based on the customer's existing Pricing Plan term and the speed of the associated Cell Transfer; or the monthly rate for a CBR, VBR-rt, VBR-nrt, ABR or UBR Incremental Cell Transfer of 5 Mbps of bandwidth on a 45 Mbps port, based on the customer's existing Pricing Plan term and the speed of the associated Cell Transfer; or the monthly rate for a CBR, VBR-rt, VBR-nrt, ABR or UBR ATM Rate of 15 Mbps of bandwidth on a 155 Mbps port, based on the customer's existing Pricing Plan term and the speed of the associated Cell Transfer; or the monthly rate for CBR, VBR-rt, VBR-nrt, ABR or UBR ATM Rate of 60 Mbps of bandwidth on a 622 Mbps port, based on the customer's existing Pricing Plan term and the speed of the associated Cell Transfer.

Should the customer choose to discontinue fixed period service prior to completion of the minimum service period, termination charges will apply. The termination charge is 100% of the minimum billing level for the remaining months of the minimum service period, plus 15% for Public Packet Switching, or 25% for Frame Relay, or 40% for ATM Service, *QWEST DSL* Service, LSS, MAS and (C)
MOE of the remaining portion of the fixed period service. Should the customer choose to discontinue fixed period service after the completion of the minimum period, termination charges equal to 15% for Public Packet Switching, 25% for Frame Relay, or 40% for ATM Service, *QWEST DSL* Service, LSS, MAS and (C)
MOE of the minimum billing level for the remaining portion of the fixed period service will apply. For example, if a Frame Relay customer discontinues a service including the Access Link after completing 17 months of a 36-month term, the termination charge will be the minimum billing level for the service, multiplied by 25%, multiplied by 19 months.

8. ADVANCED COMMUNICATIONS NETWORKS

8.1 RATE REGULATIONS
8.1.5 TERMINATION LIABILITY AND WAIVER POLICY

B. Termination Liability

3. *QWEST DSL* Volume Plan

a. Starter Option

The *QWEST DSL HOST* customer(s) who subscribe to the Starter Option must commit to acquiring a minimum of 2,500 active and billable *QWEST DSL* lines by the end of the 12th month of their 36 month Fixed Period Service Rate Plan. Starter Option Plans will be reviewed on a monthly basis, and the Starter customer will either receive or not receive a discount the following month based on that review. For example: in the month of January if the review shows the customer has 5,500 active and billable lines under the plan then the customer will receive a 4% discount on all billable *QWEST DSL* lines for the month of February, as set forth in 8.4.5.C, following. If the customer does not have a minimum of 2,500 active and billable *QWEST DSL* lines by the end of the initial 12 month period, the Company may terminate the Plan.

In the event the Company terminates the Starter Option, any new orders for *QWEST DSL* Service lines placed by the customer will be charged the current month-to-month Tariff rates for the respective *QWEST DSL* Service requested. Following termination, the Company will bill 100% of the total accumulated discount credited to the customer plus a 10% surcharge. (Z)

b. Basic Discount Option

The *QWEST DSL HOST* customer(s) must commit to acquiring a minimum of 15,000 active and billable *QWEST DSL* lines by the end of the 12th month of their 36 month Fixed Period Service Rate Plan. If the customer does not have a minimum of 15,000 active and billable *QWEST DSL* lines by the end of the initial 12 month period, the Company will terminate the Plan.

In the event the Company terminates the Basic Discount Option, any new orders for *QWEST DSL* Service lines placed by the customer will be charged the current month-to-month Tariff rates for the respective *QWEST DSL* Service requested. Following termination, the Company will bill 100% of the total accumulated discount credited to the customer plus a 10% surcharge.

8. ADVANCED COMMUNICATIONS NETWORKS

8.1 RATE REGULATIONS

8.1.5 TERMINATION LIABILITY AND WAIVER POLICY

B. Termination Liability

3. *QWEST DSL* Volume Plan (Cont'd) (T)

c. Volume Commitment Options (T)(M)

(1) Volume Commitment Option I

The *QWEST DSL HOST* customer(s) must commit to having a designated number, between 60,001 and 400,000 of active or billable *QWEST DSL* lines by the end of their 36 month Fixed Period Service Rate Plan. The customer must acquire at least 25% of the total committed lines by the end of the first 12 months, 60% of the total committed lines by the end of 24 months, and 100% of the committed lines by the end of their 36 month Fixed Period Service Rate Plan.

- Annual Verification

The Company will annually review the number of active or billable *QWEST DSL* lines to determine whether or not the customer has reached their commitment level for that respective year as determined above. If the customer fails to meet the committed number of active or billable lines, the Company will adjust their billing as follows: (M)

- Shortfall Calculation

The customer will be billed 100% of the total accumulated discount credited plus a 10% surcharge for the year reviewed. The customer will be moved to the Basic Discount Option for the subsequent year at the appropriate percentage determined by the discount table as set forth in 8.4.5.B., following. If the 15,000 line minimum level has not been met then the customer's bill will be adjusted as set forth in 8.1.5.B.3.a., preceding.

Example: A customer has chosen the Volume Commitment Option and has committed to 100,000 lines over the 36 month Fixed Period Service Rate Plan, entitling the customer to a 14% discount on the active month-to-month *QWEST DSL* lines. The commitment would require the customer to have 25,000 active and billable lines at the end of 12 months, 60,000 active and billable lines at the end of 24 months and 100,000 lines active and billable at the end of the 36 month Fixed Period Service Rate Plan.

Certain material found on this page previously appeared on Page 8-11.1.

8. ADVANCED COMMUNICATIONS NETWORKS

8.1 RATE REGULATIONS
8.1.5 TERMINATION LIABILITY AND WAIVER POLICY

B. Termination Liability

3.c.(1) (Cont'd) (T)

- The customer has 22,000 *Qwest DSL 640k* lines active and billable at the 12 month review. The customer has not reached the 25,000 line requirement, so they would be moved to the Basic Discount Option at a 12% discount for the subsequent year in lieu of the 14% discount associated with the 100,000 *QWEST DSL* Volume Commitment. The adjustment for month 12 would be calculated as follows:

  14% of (22,000 lines X $29.95 each = $658,900) = $92,246
  $92,246 + $9,225 (10% Surcharge) =
  $101,471 for month 12

  The above calculation would need to be applied to each of the previous 11 months and totaled with the 12th month to reach the annual adjustment.

- The customer has 27,000 *Qwest DSL 640k* lines active and billable at the 12 month review, but at the 24 month review has 57,000 active and billable lines. The first year would receive the 14% discount since the 25 % commitment level was reached. However, at the end of the 24 month review the customer would be moved to the Basic Discount Option at a 13% discount for the subsequent year in lieu of the 14 % discount associated with the 100,000 *QWEST DSL* Volume Commitment. The adjustment is only for the lines installed during the 2nd year and would be calculated as follows:

  14% of (30,000 lines X $29.95 each = $898,500) = $125,790
  $125,790 + $12,579 (10% Surcharge) =
  $138,369 addition to the second year's billing

8. ADVANCED COMMUNICATIONS NETWORKS

8.1 RATE REGULATIONS
8.1.5 TERMINATION LIABILITY AND WAIVER POLICY

B. Termination Liability

3.c. (Cont'd) (T)

(2) Volume Commitment Option II

The *QWEST DSL* Volume Plan customer(s) must commit to having a designated number of active or billable *QWEST DSL* lines comprised of *Qwest Choice DSL*, *QWEST DSL SELECT* and/or *Qwest DSL 640k* Services, as set forth below. This Volume Commitment Option II is only available on a 5-year Fixed Period Service Rate Plan. The customer must acquire a minimum of 150,000 active and billable *QWEST DSL* lines at any time during the first year of their 5-year Fixed Period Service Rate Plan. If the customer acquires the minimum of active and billable *QWEST DSL* lines at any time during the first year, there is no minimum requirement for the second year of the Fixed Period Service Rate Plan. The customer must acquire at least 200,001 active and billable *QWEST DSL* lines as of the end of the third, fourth and fifth years.

- Annual Verification

The Company will annually review the number of active or billable *QWEST DSL* lines to determine whether or not the customer has reached their commitment level for that respective year as determined above. If the customer fails to meet the committed number of active or billable lines, the Company will adjust their billing as follows:

8. ADVANCED COMMUNICATIONS NETWORKS

8.1 RATE REGULATIONS

8.1.5 TERMINATION LIABILITY AND WAIVER POLICY

B. Termination Liability

3.c.(2) (Cont'd) (T)

- Shortfall Calculation

If the customer falls short of their yearly commitment level (150,000 lines by the end of the first year, 200,001 lines as of the end of the third, fourth and fifth years), the customer shall pay an amount equal to the difference between the customer's applicable DSL commitment level and the customer's actual DSL lines multiplied by the applicable monthly rate times 12.

Example: If the customer's active and billable actual DSL lines at the Annual Verification total 195,000, 5,001 short of the 200,001 commitment level, the Shortfall Calculation will be calculated as follows:

Commitment Level of 200,001 lines minus 195,000 (actual lines) = 5,001 line shortfall. Volume Commitment Option II rate (e.g., $24.86, *Qwest DSL 640k* monthly rate, or the customer's *Qwest DSL 640k* Fixed Period Service Rate minus 17%). 5,001 (Line Shortfall) X $24.86 X 12 = $1,491,898.32 Shortfall charge.

8. ADVANCED COMMUNICATIONS NETWORKS

8.1 RATE REGULATIONS
8.1.5 TERMINATION LIABILITY AND WAIVER POLICY

B. Termination Liability

3.c. (Cont'd) (T)

(3) Volume Commitment Option III

The *QWEST DSL* Volume Plan customer(s) must commit to having a designated number of active or billable *QWEST DSL* lines comprised of *Qwest DSL 640k* Service, as set forth below. This Volume Commitment Option III is only available on a 5-year Fixed Period Service Rate Plan. The customer must acquire a minimum of active and billable *QWEST DSL* lines as follows to be eligible for the Volume Commitment Option III:

- 120,000 lines by the end of 18 months
- 260,000 lines by the end of 30 months
- 400,000 lines by the end of 42 months
- 500,000 lines by the end of 54 months

• Annual Verification

The Company will annually review the number of active or billable *QWEST DSL* lines to determine whether or not the customer has reached their commitment level for that respective year as determined above. Should the customer not reach the commitment level, they shall have an additional 180 days to make up the shortfall. If the customer fails to meet the committed number of active or billable lines within the additional 180 days, the Company will adjust their billing as follows:

8. ADVANCED COMMUNICATIONS NETWORKS

8.1 RATE REGULATIONS

8.1.5 TERMINATION LIABILITY AND WAIVER POLICY

B. Termination Liability

3.c.(3) (Cont'd) (T)

- Shortfall Calculation

If the customer falls short of their yearly commitment levels, the customer shall pay an amount equal to the difference between the customer's applicable DSL commitment level and the customer's actual DSL lines multiplied by the applicable monthly rate times 6. Any lines associated with a shortfall charges shall be recognized for future year(s) commitment levels.

Example: If the customer's active and billable actual DSL lines at the Annual Verification for 30 months, total 195,000, 65,000 short of the 260,000 commitment level, the Shortfall Calculation will be calculated as follows:

Commitment Level of 260,000 lines minus 195,000 (actual lines) = 65,000 line shortfall. Volume Commitment Option III rate (e.g., $29.95 DSL monthly rate with 24.9% Discount = $22.49). The formula is as follows: Volume Commitment Rate X 65,000 (Line Shortfall) X 6 = $8,771,100 Shortfall charge.

8. ADVANCED COMMUNICATIONS NETWORKS

8.1 GENERAL (T)(M)
8.1.5 TERMINATION LIABILITY AND WAIVER POLICY (Cont'd) (T)

C. Waiver Policy

A waiver of the termination charge as set forth in B., preceding, may occur if the customer moves to a different building within the Company territory or migrates to another Company service or transmission speed (e.g., 56 kbps FRS to 1.544 Mbps FRS, or changes in the Access Link, UNIT or NNIT transmission speeds) provided all of the following conditions are met:

- The customer must agree to a new pricing plan for the new service, except for FRS as set forth following and in 8.3.4.B.; (T)
- The customer must satisfy the minimum service period requirement--should the customer choose to discontinue fixed period service prior to completion of the minimum service period, termination charges, as is set forth in B., preceding, will apply; (T)
- The total value of the new service must be equal to or greater than 115% the remaining value of the existing pricing plan service (nonrecurring charges and Special Construction charges will not be used towards the Waiver calculation); (T)
- The order to disconnect the existing service and the order for the new service are received by the Company at the same time and both orders must reference the application of the waiver policy; (T)
- The new service due date must be within 30 days of the due date of the disconnection of the old service, unless the installation is delayed due to Company reasons; (T)
- New minimum service period applies to the new service, except as set forth in 8.3.4.B., following. (T)
- The customer agrees to pay all outstanding recurring and nonrecurring charges (these charges will not be included in the new service pricing plan); and (T)
- Applicable nonrecurring charges apply and are the charges in effect at the time the service is changed, except as set forth in 8.3.4. (T) (T)(M)

Certain material on this page formerly appeared on Page 8-109.
Certain material previously found on this page can now be found on Page 8-75.

8. ADVANCED COMMUNICATIONS NETWORKS

8.1 GENERAL (T)(M)
8.1.5 TERMINATION LIABILITY AND WAIVER POLICY (Cont'd) (T)

D. Nonappropriations Clause

Termination Liability and Waiver Policy does not apply to ACS Pricing Plan services purchased by local, State or Federal government entities (or to customers who have purchased services solely for resale to local, State or Federal government entities) when they are discontinued prior to the completion of the fixed period service only when all of the following conditions are met:

- The service(s) purchased by the local, State or Federal government entity or by customers that have purchased services for resale to local, State or Federal government entities are utilized solely for provision of services for that local, State or Federal government entity,

- Funding for the fixed period service ordered by the authorized local, State or Federal government entity is included in the budget request for each fiscal period appropriation sufficient to cover the authorized local, State or Federal government entity's obligations under the fixed period service for that fiscal period,

- Nonappropriation may not be used as a means of terminating the service to acquire a functionally similar product or service,

- The local, State or Federal government entity ordered the fixed period service under the good faith belief that moneys in amounts sufficient to discharge its obligations could and would lawfully be appropriated and be made available for this purpose and, (M)

Certain material on this page formerly appeared on Page 8-110.
Certain material previously found on this page can now be found on Page 8-76.

8. ADVANCED COMMUNICATIONS NETWORKS

8.1 GENERAL (T)(M)

8.1.5 TERMINATION LIABILITY AND WAIVER POLICY (T)

D. Nonappropriations Clause (Cont'd)

- The local, State or Federal government entity or the customer who ordered the service on their behalf, must provide the Company notarized documents agreed upon by both the Company and the customer, showing that the entity is allotted insufficient funds for the remainder of the then current fiscal period (or for a succeeding fiscal period) by appropriation, appropriation limitation or grant to continue payments under the fixed period service and has no other funding source lawfully available to it for such purpose. (T)

  The fixed period service may be terminated by giving the Company not less than 30 days written notice. Should the customer receive funding for the cancelled service prior to physical disconnect of service, the customer may cancel the disconnect order per Section 5. Upon termination, the local, State or Federal government entity or the customer who ordered the service on their behalf, shall pay all applicable rates and nonrecurring charges of the fixed period service incurred through the date of termination and through the end of the then current fiscal period to the extent of lawfully available funds. (T) (T) (M)

Certain material on this page formerly appeared on Page 8-111.
Certain material previously found on this page can now be found on Page 8-77.

8. ADVANCED COMMUNICATIONS NETWORKS

8.1 GENERAL (Cont'd)

8.1.6 SPREAD OF NONRECURRING CHARGES

A. Frame Relay Service, *QWEST DSL* Service, ATM Service, LSS and MOE (C)

At the customer's request, nonrecurring charges for FRS, *QWEST DSL* Service, ATM Service, LSS and/or MOE provided under the Pricing Plan may be (C) amortized over the term of the fixed period and billed monthly. Nonrecurring charges billed in this manner (i.e., as an annuity), shall be subject to interest charges which the Company will include in each monthly installment.

The Company will calculate the monthly annuity, including principal and interest, using the following Annuity from a Present Amount formula:

$$\text{Monthly Annuity} = (\text{Nonrecurring Charge}) \quad \frac{\frac{i}{12}\left(1+\frac{i}{12}\right)^{n}}{\left(1+\frac{i}{12}\right)^{n}-1}$$

In the above formula, the variable "i" is the Company's Pretax Incremental Cost of Capital rate in effect when the monthly annuity amount is calculated. The variable "n" (an exponent) is the term of the fixed period in months.

8. ADVANCED COMMUNICATIONS NETWORKS

8.1 GENERAL

8.1.6 SPREAD OF NONRECURRING CHARGES

A. Frame Relay Service, *QWEST DSL* Service, ATM Service and LSS (Cont'd) (T)

If the customer discontinues FRS, ATM Service and/or LSS, changes to a lower speed service, moves or upgrades service, prior to the completion of the fixed period, the total remaining unpaid monthly annuity payments for the recovery of the nonrecurring charge must be paid immediately as a one-time charge. The Company will calculate this one-time charge using the following Present Value of an Annuity formula: (T)

$$\text{One-time Charge} = (\text{Monthly Annuity})\ \frac{\left(1+\frac{i}{12}\right)^{n}-1}{\frac{i}{12}\left(1+\frac{i}{12}\right)^{n}}$$

In the formula directly above, the variable "i" is the Company's Pretax Incremental Cost of Capital in effect when the one-time charge amount is calculated. The variable "n" (an exponent) is the total number of remaining unpaid monthly annuity payments.

8. ADVANCED COMMUNICATIONS NETWORKS

8.1 GENERAL (Cont'd)

8.1.7 PREPAYMENT DISCOUNT

A. Frame Relay Service, ATM Service, LSS and MOE

At the customer's request, recurring rates for FRS, ATM Service, LSS and/or MOE provided under a Pricing Plan may be prepaid in whole or in part. The Company will calculate the prepayment amount using the following Present Value of an Annuity formula: (C)

$$\text{Prepayment} = (\text{Recurring Rate}) \quad \frac{\left(1+\frac{i}{12}\right)^{n}-1}{\frac{i}{12}\left(1+\frac{i}{12}\right)^{n}}$$

In the above formula, the variable "i" is equal to the Treasury rate plus a prepayment premium expressed as an Annual Percentage Rate (APR). The variable "n" (an exponent) is a fixed period in months for which the customer requests to prepay the recurring rate in whole or in part.

If the customer discontinues the prepaid service in whole or in part prior to the expiration of the original fixed period, the Company will calculate the Present Value of an Annuity refund amount by using the same rate at which the prepayment was initially calculated. From this credit, Termination Liability charges as specified in 8.1.5, preceding, are subtracted. If a credit balance remains, the Company will return it to the customer. (T)

8. ADVANCED COMMUNICATIONS NETWORKS

8.1 GENERAL (Cont'd)

8.1.8 PROMOTIONS

A. Utah Promotion – Reduced Minimum Service Period for ATM Service (T)

This promotion applies to customers ordering the following services in Utah between September 15, 2001 and December 1, 2001, with order completion within 90 days of the order date. Refer to 7.1.9.A. for a related promotion.

ATM Service – DS3 and OC3 are eligible for this promotion: (T)

This promotion reduces the preceding services' month-to-month minimum service periods from 12 months to 6 months.

ATM Service requires that the customer complete a Fixed Period Service Rate Plan (or Pricing Plan) before the customer may subscribe to month-to-month service. This promotion waives that requirement so the customer may immediately subscribe to month-to-month service. (T)

This promotion does not apply to minimum service periods for Pricing Plans. The month-to-month rates and nonrecurring charges for these services are not changed by this promotion. Special Construction may apply.

This promotion shall not be used with other promotional offerings.

8. ADVANCED COMMUNICATIONS NETWORKS

8.1 GENERAL (T)(M)
8.1.8 PROMOTIONS (Cont'd)

B. FRS Pricing Plan Promotion 2 - January 5, 1999 through March 31, 1999 (T)

For a limited time only, the nonrecurring charges for FRS will be waived for customers who install new service and subscribe to a 24-month or greater Pricing Plan; or for existing FRS Pricing Plan customers who install service at a new customer premises or location and subscribe to a 24-month or greater Pricing Plan; or for existing FRS customers who upgrade from a monthly or a 12-month Pricing Plan to a 24-month or greater Pricing Plan. Order applications must be placed from January 5, 1999 through March 31, 1999, with order completion within 60 days of the order application date. The order application date is the date the service is ordered. When order completion is delayed due to Company reasons, the order completion date will be extended. Termination Liability or Discontinuance Charges will not apply. (T) (T) (T)

Exclusions to the above promotion are:

1. Moves of existing services within the same building or to a different building. (T)

2. Customer Network Management (CNM) (T)

3. Each additional PVC charge associated with existing service pointing to an existing location. (T)

4. Subsequent PVC(s) order charge associated with existing service pointing to an existing location. (T) (M)

Certain material on this page formerly appeared on Page 8-83.
Certain material previously found on this page can now be found on Page 8-82.

8. ADVANCED COMMUNICATIONS NETWORKS

8.1 GENERAL (S-y)
8.1.8 PROMOTIONS (Cont'd) (S-y)

C. FRS and ATM Pricing Plan Promotion – January 15, 2001 through April 11, 2001 (N)

For a limited time only, 100% of the nonrecurring charges for FRS (with the exception of 56 kbps) and ATM will be waived for customers who install new service and subscribe to a 12-month, 24-month, 36-month, 48-month, 60-month, 72-month or 84-month Pricing Plan, or for existing FRS (with the exception of 56 kbps) and ATM Pricing Plan customers who install service at a new customer premises or location and subscribe to a 12-month, 24-month, 36-month, 48-month, 60-month, 72-month or 84-month Pricing Plan; or for existing FRS (with the exception of 56 kbps) and ATM customers who upgrade from a monthly, 12-month, 24-month, 36-month, 48-month, 60-month, or 72-month Pricing Plan to a new fixed period Pricing Plan.

Customer orders must be placed from January 15, 2001 through April 11, 2001, with order completion within 120 days of the order date. When order completion is delayed due to Company reasons, the order completion date will be extended. Termination Liability or Discontinuance Charges will not apply.

Exclusions to the above promotion are the following:

- FRS 56 kbps
- Moves of existing services within the same building or to a different building
- Customer Network Management (CNM)
- Additional PVC, VCC or VPC charges associated with existing service pointing to an existing or new location.
- Subsequent PVC(s), VCC(s) or VPC(s) order charges associated with existing service pointing to an existing or new location.
- Changes in CIR for FRS
- Transport Channel and Transport Mileage
- Services from Sections 7, 13 and 15 (N)

(y) Reissued material filed under Transmittal No. 28 effective December 6, 2000.

8. ADVANCED COMMUNICATIONS NETWORKS

8.1 GENERAL (T)(M)
8.1.8 PROMOTIONS (Cont'd)

D. FRS, ATM and LSS Pricing Plan Promotion 4 – July 10, 2000 through October 4, 2000 (T)

LSS and FRS 2-Wire 128 kbps do not offer 24-month, 48-month, 72-month or 84-month Pricing Plans. (T) (T)

For a limited time only, 50% of the nonrecurring charges for FRS (with the exception of 56 kbps), ATM and LSS will be waived for customers who install new service and subscribe to a 36-month or 48-month Pricing Plan, or for existing FRS (with the exception of 56 kbps), ATM, and LSS Pricing Plan customers who install service at a new customer premises or location and subscribe to a 36-month or 48-month Pricing Plan; or for existing FRS (with the exception of 56 kbps), ATM and LSS customers who upgrade from a monthly, 12-month or 24-month Pricing Plan to a 36-month or 48-month Pricing Plan. (T) (T) (T)

And 100% of the nonrecurring charges for FRS(with the exception of 56 kbps), ATM and LSS will be waived for customers who install new service and subscribe to a 60-month, 72-month or 84-month Pricing Plan, or for existing FRS (with the exception of 56 kbps), ATM and LSS Pricing Plan customers who install service at a new customer premises or location and subscribe to a 60-month, 72-month or 84-month Pricing Plan; or for existing FRS (with the exception of 56 kbps), ATM and LSS customers who upgrade from a monthly, 12-month, 24-month, 36-month or 48-month Pricing Plan to a 60-month, 72-month or 84-month Pricing Plan. (T) (T) (T)(M)

Certain material on this page formerly appeared on Page 8-85.
Certain material previously found on this page can now be found on Page 8-84.

8. ADVANCED COMMUNICATIONS NETWORKS

8.1 GENERAL (T)(M)

8.1.8 PROMOTIONS

D. FRS, ATM and LSS Pricing Plan Promotion 4 – July 10, 2000 through October 4, 2000 (Cont'd) (T)

Customer orders must be placed from July 10, 2000 through October 4, 2000, with order completion within 120 days of the order date. When order completion is delayed due to Company reasons, the order completion date will be extended. Termination Liability or Discontinuance Charges will not apply.

Exclusions to this promotion are: (T)

- FRS 56 kbps
- Moves of existing services within the same building or to a different building
- Customer Network Management (CNM)
- Additional PVC, VCC or VPC charges associated with existing service pointing to an existing or new location.
- Subsequent PVC(s), VCC(s) or VPC(s) order charges associated with existing service pointing to an existing or new location.
- Changes in CIR for FRS
- Transport Channel and Transport Mileage (M)

Certain material on this page formerly appeared on Page 8-85.
Certain material previously found on this page can now be found on Page 8-86.

8. ADVANCED COMMUNICATIONS NETWORKS

8.1 GENERAL (T)(M)
8.1.8 PROMOTIONS (Cont'd)

E. FRS Promotion 5 – October 2, 2000 through December 27, 2000 (T)

For a limited time only, FRS customers who currently subscribe to Pricing Plans that will expire between October 1, 2000 and March 31, 2001 will receive 2 or 3 months recurring credit if they renew their FRS Pricing Plan for 36 months or longer. If the service is renewed for 36 or 48 months then a 2-month credit will (T) be applied to the customer's first 2 bills. If the service is renewed for 60 months or longer then a 3-month credit will be applied to their first 3 bills. This plan may (T) not be combined with any other promotion and will not include credit for Transport Mileage and Private Line Transport Services recurring rates used as Access Links.

Customer orders must be placed from October 2, 2000 through December 27, 2000, with order completion within 120 days of the order date. When order completion is delayed due to Company reasons, the order completion date will be extended. Termination Liability or Discontinuance Charges will not apply. (M)

Certain material on this page formerly appeared on Page 8-85.1.
Certain material previously found on this page can now be found on Pages 8-288 and 8-289.

8. ADVANCED COMMUNICATIONS NETWORKS

8.1 GENERAL
8.1.8 PROMOTIONS (Cont'd)

F. *QWEST DSL HOST* Service Pricing Plan Promotion 1 - April 1, 1999 through May 28, 1999. (T)

For a limited time only, the nonrecurring charges for *QWEST DSL HOST* Service Ports will be waived for customers who install new service and subscribe to a 12-month or greater Pricing Plan; or for existing *QWEST DSL HOST* Service Pricing Plan customers who install service at a new customer premises or location and subscribe to a 12-month or greater Pricing Plan. Order applications must be placed from April 1, 1999 through May 28, 1999, with order completion within 60 days of the order application date. The order application date is the date the service is ordered. When order completion is delayed due to Company reasons, the order completion date will be extended. Termination Liability or Discontinuance Charges will not apply. (T) (T)

An exclusion to the above promotion is:

1. Moves of existing services within the same building or to a different building.

G. *QWEST DSL* Service Pricing Plan Promotion 2 – June 28, 1999 through August 20, 1999. (T)

For a limited time only, the Company will provide a $100.00 check to new customers who subscribe to *QWEST DSL* Service with a 36-month or greater Pricing Plan or to existing customers who order an additional *QWEST DSL* Service with a 36-month or greater Pricing Plan. Order applications must be placed from June 28, 1999 through August 20, 1999. This promotional offering is only available once to a customer during the promotional period. (T) (T)

Once the customer's *QWEST DSL* Service has been installed, the Company will mail the customer an information form to verify the address for check issuance. The customer must return the information form to the Company within six weeks of its mailing in order to receive the check. Upon receipt of the completed information form, the Company will mail the check to the customer of record within four weeks. (T)

8. ADVANCED COMMUNICATIONS NETWORKS

8.1 GENERAL
8.1.8 PROMOTIONS (Cont'd)

H. *QWEST DSL* Service Promotion 3 – August 23, 1999 through October 30, 1999. (T)

For a limited time only, the nonrecurring charges for *QWEST DSL* Service will be (T)
waived for customers who install new service or for existing *QWEST DSL* Service (T)
customers who install service at a new customer premises or location. Order applications must be placed from August 23, 1999 through October 30, 1999, with order completion within 60 days of the order application date. The order application date is the date the service is ordered. When order completion is delayed due to Company reasons, the order completion date will be extended. This offering is not available with any other promotion.

8. ADVANCED COMMUNICATIONS NETWORKS

Certain material previously found on this page can now be found on Pages 8-292.

8. ADVANCED COMMUNICATIONS NETWORKS

8.1 GENERAL
8.1.8 PROMOTIONS (Cont'd)

I. *QWEST DSL* Service Promotion – January 3, 2001 through April 3, 2001. (C)

For a limited time only, the nonrecurring charges for *QWEST DSL* Service will be waived for customers who install new service or for existing *QWEST DSL* Service customers who install service at a new customer premises or location. Qualifying customers will receive a one-time credit equal to one month of the recurring charges on their first bill if the order application is placed from January 3, 2001 through February 2, 2001. In addition, qualifying customers will receive a one-time credit equal to two months of the recurring charges on their first bill if the order application is placed from February 3, 2001 through April 3, 2001. All (C)
orders must be completed within 60 days of the order application date, the date the (T)
service is ordered. When order completion is delayed due to Company reasons, the order completion date will be extended. This offering is not available with any other promotion.

8. ADVANCED COMMUNICATIONS NETWORKS

8.1 GENERAL
8.1.8 PROMOTIONS (Cont'd)

J. *QWEST DSL* Service Promotion 5 – January 4, 2000 through April 2, 2000. (T)

For a limited time only, the nonrecurring charges for *QWEST DSL* Service will be (T)
waived for customers who install new service or for existing *QWEST DSL* Service (T)
customers who install service at a new customer premises or location. Order applications must be placed from January 4, 2000 through April 2, 2000, with order completion within 60 days of the order application date. The order application date is the date the service is ordered. When order completion is delayed due to Company reasons, the order completion date will be extended. This offering is not available with any other promotion.

8. ADVANCED COMMUNICATIONS NETWORKS

8.1 GENERAL
8.1.8 PROMOTIONS (Cont'd)

K. *QWEST DSL* Service Promotion 6 – April 3, 2000 through July 1, 2000. (T)

The following promotional offering is available to new *QWEST DSL* Service customers and existing customers who install service at a new premises or location. Order applications must be placed from April 3, 2000 through July 1, 2000, with order completion within 60 days of the order application date. Qualifying customers will receive a 1-time credit equal to 2 months of the recurring charges on their first bill. This offering is not available with any other promotion. (T)

8. ADVANCED COMMUNICATIONS NETWORKS

8.1 GENERAL
8.1.8 PROMOTIONS (Cont'd)

L. *QWEST DSL* Service Promotion 7 – July 2, 2000 through September 29, 2000. (T)

For a limited time only, the nonrecurring charges for *QWEST DSL* Service will be waived for customers who install new service and subscribe to a 12-month, 36-month or 60-month Pricing Plan or for existing *QWEST DSL* Service customers who install service at a new customer premises or location and subscribe to a 12-month, 36-month or 60-month Pricing Plan. Order applications must be placed from July 2, 2000 through September 29, 2000, with order completion within 60 days of the order application date. The order application date is the date the service is ordered. When order completion is delayed due to Company reasons, the order completion date will be extended. This offering is not available with any other promotion. (T) (T)

8. ADVANCED COMMUNICATIONS NETWORKS

8.1 GENERAL
8.1.8 PROMOTIONS (Cont'd)

M. *QWEST DSL* Service Promotion 8 – September 2, 2000 through January 2, 2001. (T)

For a limited time only, the nonrecurring charges for *QWEST DSL* Service will be (T)
waived for customers who install new service or for existing *QWEST DSL* Service (T)
customers who install service at a new customer premises or location. In addition the Company will guarantee customer satisfaction by refunding any recurring charges accrued and waiving Termination Liability, if the customer cancels service within 30 days after installation due to dissatisfaction. Order applications must be placed from September 2, 2000 through January 2, 2001, with order completion within 60 days of the order application date. The order application date is the date the service is ordered. When order completion is delayed due to Company reasons, the order completion date will be extended. This offering is not available with any other promotion.

8. ADVANCED COMMUNICATIONS NETWORKS

Certain material previously found on this page can now be found on Page 8-300.

8. ADVANCED COMMUNICATIONS NETWORKS

8.1 GENERAL
8.1.8 PROMOTIONS (Cont'd)

N. *QWEST DSL HOST* Service Promotion – October 2, 2000 through December 29, 2000. (T)

For a limited time only, the nonrecurring Port charges for *QWEST DSL HOST* Service will be waived for customers who install new *QWEST DSL HOST* Ports for monthly, 12-, 36- or 60-month Pricing Plans. Order applications must be placed from October 2, 2000 through December 29, 2000, with order completion within 120 days of the order application date. The order application date is the date the service is ordered. When order completion is delayed due to Company reasons, the order completion date will be extended. This offering is not available with any other promotion. (T) (T)

8. ADVANCED COMMUNICATIONS NETWORKS

8.1 GENERAL
8.1.8 PROMOTIONS (Cont'd)

O. *QWEST IDSL* Service Promotion – October 2, 2000 through December 15, 2000. (T)

For a limited time only, the Company will waive $150.00 of the $250.00 *QWEST IDSL* Channel Termination nonrecurring charge for customers who subscribe to a new *QWEST IDSL* Channel Termination for monthly, 12-, 36- or 60-month Pricing Plans. Order applications must be placed from October 2, 2000 through December 15, 2000, with order completion within 60 days of the order application date. The order application date is the date the service is ordered. When order completion is delayed due to Company reasons, the order completion date will be extended. This offering is not available with any other promotion. (T) | (T)

8. ADVANCED COMMUNICATIONS NETWORKS

8.1 GENERAL (T)(M)
8.1.8 PROMOTIONS (Cont'd)

P. ATM Cell Relay Service Pricing Plan Promotion 1 - September 29, 1998 through October 31, 1998 (T)

The Company will offer the following promotional incentive for customers who subscribe to this promotion between September 29, 1998 and October 31, 1998. Specifically, the Company will provide a coupon for a one-time credit equal to 1 month's billing of the customer's ATM Pricing Plan Optical Access Link, Fixed Rate per Port, Peak Cell Rate Service, Sustained Cell Rate Service, Unspecified Bit Rate Service and Transport Channel rate elements. The coupon will be issued to the customer once the requested service is installed. The customer may redeem the coupon at anytime before its expiration date (i.e., 10 months from issuance). Customers who redeem the coupon will receive the one-time credit on the 12th full billing month of the customer's Pricing Plan fixed period. (T) (T) (T)

In order to qualify for this promotion, the customer must order a new ATM Pricing Plan with a fixed period of 12, 24, 36, 48, 60, 72 or 84 months. The coupon is not redeemable if the service is disconnected before the 12th month. (T) (T)

The Company will offer a Service Date based on the type and quantity of Access Services the customer has requested as set forth in 5.2.1 and 8.1.2, preceding. (M)

Certain material on this page formerly appeared on Page 8-97.
Certain material previously found on this page can now be found on Pages 8-320 and 8-321.

8. ADVANCED COMMUNICATIONS NETWORKS

8.1 GENERAL
8.1.8 PROMOTIONS (Cont'd)

Q. ATM Service Pricing Plan Promotion 2 - January 5, 1999 through March 31, 1999 (T)

For a limited time only, the nonrecurring charges for ATM Service will be waived (T) for customers who install new service and subscribe to a 24-month or greater Pricing Plan; or for existing ATM Service Pricing Plan customers who install (T) service at a new customer premises or location and subscribe to a 24-month or greater Pricing Plan; or for existing ATM Service customers who upgrade from a (T) monthly or a 12-month Pricing Plan to a 24-month or greater Pricing Plan. Order applications must be placed from January 5, 1999 through March 31, 1999, with order completion within 120 days of the order application date. The order application date is the date the service is ordered. When order completion is delayed due to Company reasons, the order completion date will be extended. Termination Liability or Discontinuance Charges will not apply.

Exclusions to the above promotion are:

1. Moves of existing services within the same building or to a different building.

2. Each additional VCC and/or VPC charge associated with existing service pointing to an existing location.

3. Subsequent VCC(s) and/or VPC(s) order charge associated with existing service pointing to an existing location.

8. ADVANCED COMMUNICATIONS NETWORKS

8.1 GENERAL
8.1.8 PROMOTIONS (Cont'd)

R. ATM Service Pricing Plan Promotion 3 - September 15,1999 through November 12, 1999 (T)

For a limited time only, ATM Service customers who install new service and subscribe to a 36-month Pricing Plan will receive credit for 2 months of recurring rates and/or a 60-month Pricing Plan will receive credit for 3 months of recurring rates. This same offering is also available for customers who upgrade from Private Line Services or Frame Relay Services to ATM Service, upgrade Optical Access Link (OAL) and/or port speeds and for existing ATM Service customers who install service at a new customer premises or location. Qualifying customers will receive the full credit due within the first 2 billing cycles. Order applications must be placed from September 15, 1999 through November 12, 1999, with order completion within 120 days of the order application date. The order application date is the date the service is ordered. When order completion is delayed due to Company reasons, the order completion date will be extended. Termination Liability and Discontinuance Charges will apply. (T) (T) (T)

8. ADVANCED COMMUNICATIONS NETWORKS

8.1 GENERAL
8.1.8 PROMOTIONS

R. ATM Service Pricing Plan Promotion 3 - September 15,1999 through November 12, 1999 (Cont'd) (T)

Exclusions to this promotion are:

1. Moves of existing services within the same building or to a different building.
2. DS1, DS3, SST, SHARP or SHNS Private Line Services when used with ATM Service. (T)
3. Standalone Optical Access Link (SAOAL).
4. Transport Channel Mileage (Fixed and Per Mile) that brings a Digital Private Line Service facility to an ATM service point.
5. Adding Virtual Path Connections (VPCs) or Virtual Channel Connections (VCCs) to existing ATM Service customer accounts. (T)
6. Renewal of an existing ATM Service Pricing Plan. (T)
7. Change of jurisdiction from Intrastate to Interstate.
8. Changes in bandwidth increments (e.g., 64 kbps to 1 Mbps).
9. Changes in service categories (e.g., CBR to VBR).
10. Any ATM Service used with *QWEST DSL* Services. (T)

8. ADVANCED COMMUNICATIONS NETWORKS

8.1 GENERAL (T)(M)
8.1.8 PROMOTIONS (Cont'd)

S. LSS Promotion 1 - January 5, 1999 through March 31, 1999 (T)

For a limited time only, the nonrecurring charges for LSS will be waived for customers who install new service and subscribe to a 36-month or greater Pricing Plan; or for existing LSS Pricing Plan customers who install service at a new customer premises or location and subscribe to a 36-month or greater Pricing Plan; or for existing LSS customers who upgrade from a monthly or a 12-month Pricing Plan to a 36-month or greater Pricing Plan. Order applications must be placed from January 5, 1999 through March 31, 1999, with order completion within 120 days of the order application date. The order application date is the date the service is ordered. When order completion is delayed due to Company reasons, the order completion date will be extended. Termination Liability or Discontinuance Charges will not apply. (T) (T) (T)

Exclusions to the above promotion are:

1. Moves of existing services within the same building or to a different building. (T)(M)

Certain material on this page formerly appeared on Page 8-101.
Certain material previously found on this page can now be found on Pages 8-327 and 8-328.

8. ADVANCED COMMUNICATIONS NETWORKS

8.1 GENERAL (T)(M)
8.1.8 PROMOTIONS (Cont'd)

T. MAS Pricing Plan Promotion – June 14, 2000 through September 12, 2000 (T)

For a limited time only, the nonrecurring charges for MAS will be waived for customers who install new service and subscribe to a 12-month or greater Pricing (T) Plan; for existing MAS customers who install service at a new customer premises and subscribe to a 12-month or greater Pricing Plan; or for existing MAS (T) customers who add additional telephone numbers to there existing MAS service. Order applications must be placed from June 14, 2000 through September 12, 2000, with order completion within 45 days of the order application date. The order application date is the date the service is ordered. When order completion is delayed due to Company reasons, the order completion date will be extended. This offering is not available with any other promotion. (M)

Certain material on this page formerly appeared on Page 8-307.
Certain material previously found on this page can now be found on Pages 8-329 and 8-330.

8. ADVANCED COMMUNICATIONS NETWORKS

8.1 GENERAL (T)(M)
8.1.8 PROMOTIONS (Cont'd)

U. MAS Pricing Plan Promotion – July 24, 2000 through October 21, 2000 (T)

The following MAS Pricing Plan promotional offerings are available to customers subscribing to a new MAS 12-, 36- or 60-month Fixed Period Service Rate Plan or (T) adding to an existing MAS 12-, 36- or 60-month Fixed Period Service Rate Plan (T) from July 24, 2000 through October 21, 2000. These offerings may not be combined with any other promotion.

- If a customer subscribes to a MAS 12-month Fixed Period Service Rate Plan, (T) they will receive a credit equal to 1 month of the recurring charges, the credit (T) will be applied to the customer's first month of service.

- If a customer subscribes to a MAS 36-month Fixed Period Service Rate Plan, (T) they will receive a credit equal to 2 months of the recurring charges, the credits (T) will be applied to the customer's first and second months of service.

- If a customer subscribes to a MAS 60-month Fixed Period Service Rate Plan, (T) they will receive a credit equal to 3 months of the recurring charges, the credits (T) will be applied to the customer's first, second and third months of service.

All credits will be forfeited, on a per plan basis, if a customer terminates one of these promotional Fixed Period Service Rate Plans prior to the expiration date of the plan. Any credits already given for the terminated plan will be included in the termination liability charges. (M)

Certain material on this page formerly appeared on Page 8-308.
Certain material previously found on this page can now be found on Page 8-331.

8. ADVANCED COMMUNICATIONS NETWORKS

8.1 GENERAL (T)(M)
8.18 PROMOTIONS (Cont'd)

V. MAS Pricing Plan Promotion – October 2, 2000 through December 29, 2000 (T)

For a limited time only, the Initial and Subsequent MAS Order Charges will be waived for customers who install new MAS Service in the 201 Blocks and Above category for monthly and 12-month Pricing Plans. Order applications must be (C) placed from October 2, 2000 through December 29, 2000, with order completion within 90 days of the order application date. The order application date is the date the service is ordered. When order completion is delayed due to Company reasons, the order completion date will be extended. This offering is not available with any other promotion. (M)

Certain material on this page formerly appeared on Page 8-308.1.
Certain material previously found on this page can now be found on Pages 8-429 and 8-430.

8. ADVANCED COMMUNICATIONS NETWORKS

8.1 GENERAL
8.1.8 PROMOTIONS (Cont'd)

W. *QWEST IDSL* Service Promotion – February 7, 2001 through April 6, 2001. (S-y)

For a limited time only, the Company will waive $151.00 of the $250.00 *QWEST IDSL* Channel Termination nonrecurring charge for customers who subscribe to a new *QWEST IDSL* Channel Termination for 12-, 36- or 60-month Pricing Plans. Order applications must be placed from February 7, 2001 through April 6, 2001, with order completion within 60 days of the order application date. The order application date is the date the service is ordered. When order completion is delayed due to Company reasons, the order completion date will be extended. This offering is not available with any other promotion. (S-y) (C-x) (S-y) (S-y) (S-y)

(x) Issued under the authority of Special Permission No. 01-012.

(y) Reissued matter filed under Transmittal No. 42, to become effective February 7, 2001.

8. ADVANCED COMMUNICATIONS NETWORKS

8.1 GENERAL
8.1.8 PROMOTIONS (Cont'd)

X. FRS, ATM and LSS Pricing Plan Promotion – April 2, 2001 through June 29, 2001

LSS does not offer a 48-month Pricing Plan. (C)

The following promotional offerings are available to new customers or customers (C)
upgrading or adding to their existing service who subscribe to a new 36-month or (C)
longer Pricing Plan for FRS, ATM or LSS from April 2, 2001 through June 29,
2001. These offerings are not available with other FRS, ATM or LSS promotions. (C)

New customers will receive 2 or 3 months recurring credit if they subscribe to a
36-month or longer FRS, ATM or LSS Pricing Plan. If the service is for 36 or 48
months then qualifying customers will receive a 2-month credit that will be (T)
applied to the customer's first 2 bills. If the service is for 60 months or longer then
qualifying customers will receive a 3-month credit that will be applied to their first (C)
3 bills. This same offering is also available for existing customers who upgrade
their service to FRS, ATM, or LSS; or who upgrade their Pricing Plan to a higher
transmission speed or install new service at a new location; or who upgrade from a
monthly Plan to a 36-month or greater Pricing Plan. (C)

Customer orders must be placed from April 2, 2001 through June 29, 2001, with
order completion for FRS – DS1 and below within 60 days of the order date and (C)
FRS – DS3, ATM and LSS within 120 days of the order date. When order
completion is delayed due to Company reasons, the order completion date will be
extended. Termination Liability or Discontinuance Charges will not apply.

8. ADVANCED COMMUNICATIONS NETWORKS

8.1 GENERAL
8.1.8 PROMOTIONS (Cont'd)

Y. *QWEST DSL* Service Promotion – April 4, 2001 through July 25, 2001. (C-x)

For a limited time only, the nonrecurring charges for all DMT *QWEST DSL* Services and CAP *QWEST DSL SELECT* Service will be waived for customers who install new service or for existing *QWEST DSL* Service customers who install service at a new customer premises or location. In addition qualifying customers will receive a one-time credit equal to one month of the recurring charges on their first bill if the order application is placed from April 4, 2001 through July 25, 2001. All orders must be completed within 60 days of the order application date, the date the service is ordered. When order completion is delayed due to Company reasons, the order completion date will be extended. This offering is not available with any other promotion. (C-x)

(x) Issued under the authority of Special Permission No. 01-044.

8. ADVANCED COMMUNICATIONS NETWORKS

8.1 GENERAL
8.1.8 PROMOTIONS (Cont'd)

Z. *QWEST IDSL* Service Promotion – June 1, 2001 through July 31, 2001. (N)

For a limited time only, the Company will waive $151.00 of the $250.00 *QWEST IDSL* Channel Termination nonrecurring charge for customers who subscribe to a new *QWEST IDSL* Channel Termination for 12-, 36- or 60-month Pricing Plans. Order applications must be placed from June 1, 2001 through July 31, 2001, with order completion within 60 days of the order application date. The order application date is the date the service is ordered. When order completion is delayed due to Company reasons, the order completion date will be extended. This offering is not available with any other promotion. (N)

8. ADVANCED COMMUNICATIONS NETWORKS

8.1 GENERAL
8.1.8 PROMOTIONS (Cont'd)

AA. FRS, ATM and LSS Pricing Plan Promotion– June 1, 2001 through August 29, 2001 (N)

For a limited time only, the nonrecurring charges for FRS, ATM and LSS with a Fixed Period Service Rate Plan of 12 months or greater will be waived. This offering is for new service customers or existing FRS, ATM or LSS Service customers who install service at a new customer premises or location. Following is a list of the specific nonrecurring charges that will be waived per product:

1. FRS Rate Elements
   - 56 kbps and 1.544 Mbps Access Links
   - 56 kbps and 1.544 Mbps Stand-Alone Access Links
   - 56/64 kbps, 1.544 Mbps and 44.736 Mbps UNI and NNI Ports
   - 56/64 kbps, 1.544 Mbps and 44.736 Mbps UNI and NNI PVCs
   - Central Office Connecting Channels (COCC)

2. ATM Rate Elements
   - 45 Mbps and 155 Mbps Optical Access Links
   - 45 Mbps and 155 Mbps Optical Stand-Alone Access Links
   - 1.544 Mbps, 45 Mbps and 155 Mbps Ports
   - 1.544 Mbps, 45 Mbps and 155 Mbps VCCs and VPCs
   - Central Office Connecting Channels (COCC)

3. LSS Rate Elements
   - LAN Links
   - Remote LAN Links

Customer orders must be placed from June 1, 2001 through August 29, 2001, with order completion for FRS – DS1 and below within 60 days of the order date and FRS – DS3, ATM and LSS within 120 days of the order date. When order completion is delayed due to Company reasons, the order completion date will be extended. Termination Liability or Discontinuance Charges will not apply. This offering is not available with any other promotion. (N)

8. ADVANCED COMMUNICATIONS NETWORKS

8.1 GENERAL
8.1.8 PROMOTIONS (Cont'd)

BB. *QWEST DSL* Service Promotion – September 14, 2001 through December 31, 2001. (N)

For a limited time only, the nonrecurring charge for a Destination Channel Change will be waived for customers who are changing their DSL Host. Order applications must be placed from September 14, 2001 through December 31, 2001, with order completion within 60 days of the order application date. When order completion is delayed due to Company reasons, the order completion date will be extended. This offering is not available with any other promotion. (N)

8. ADVANCED COMMUNICATIONS NETWORKS

8.1 GENERAL
8.1.8 PROMOTIONS (Cont'd)

CC. FRS, ATM and LSS Pricing Plan Promotion – October 9, 2001 through December 28, 2001 (N)

For a limited time only, the nonrecurring charges for FRS, ATM and LSS will be waived for new customers or existing customers upgrading to a 12-month or longer Fixed Period Service Rate Plan from October 9, 2001 through December 28, 2001. These offerings are not available with other FRS, ATM or LSS promotions.

Upgraded service includes:

- Existing Fixed Period Service Rate Plan customers who upgrade to a higher transmission speed.

- Existing Fixed Period Service Rate Plan customers who add or install new service at a new premises or location to their existing FRS, ATM or LSS Pricing Plan.

Customer orders must be placed from October 9, 2001 through December 28, 2001, with order completion for FRS – DS1 and below within 60 days of the order date and FRS – DS3, ATM and LSS within 120 days of the order date. When order completion is delayed due to Company reasons, the order completion date will be extended. Termination Liability or Discontinuance Charges will not apply. (N)

8. ADVANCED COMMUNICATIONS NETWORKS

8.1 GENERAL
8.1.8 PROMOTIONS (Cont'd)

DD. *QWEST DSL PRO* Service Promotion – October 31, 2001 through January 4, 2002. (N)

All new customers who subscribe to *QWEST DSL PRO DELUXE, QWEST DSL PRO 640 KBPS, QWEST DSL PRO 1 MBPS, QWEST DSL PRO 4 MBPS* or *QWEST DSL PRO 7 MBPS* Service from October 31, 2001 through January 4, 2002 will receive a $100.00 credit. To qualify for the $100.00 credit, the customer must have this service for a minimum of 45 days. When the customer's service has been activated for 45 days, a check for $100.00 will be mailed to the customer's billing address within 30 days.

Order applications must be placed from October 31, 2001 through January 4, 2002, with order completion within 60 days of the order application date. When order completion is delayed due to Company reasons, the order completion date will be extended. This offering is not available with any other promotion. (N)

8. ADVANCED COMMUNICATIONS NETWORKS

8.1 GENERAL
8.1.8 PROMOTIONS (Cont'd)

EE. *QWEST DSL* Service Promotion – January 1, 2003 through September 30, 2003. (C)

For a limited time only, the nonrecurring charge for a Destination Channel Change will be waived for customers who are changing their DSL Host. Order applications must be placed from January 1, 2003 through September 30, 2003, (C) with order completion within 60 days of the order application date. When order completion is delayed due to Company reasons, the order completion date will be extended. This offering is not available with any other promotion.

8. ADVANCED COMMUNICATIONS NETWORKS

8.1 GENERAL
8.1.8 PROMOTIONS (Cont'd)

FF. *QWEST DSL PRO* Service Promotion – January 10, 2002 through March 31, 2002. (N)

All new customers who subscribe to *QWEST DSL PRO DELUXE, QWEST DSL PRO 640 KBPS, QWEST DSL PRO 1 MBPS, QWEST DSL PRO 4 MBPS* or *QWEST DSL PRO 7 MBPS* Service from January 10, 2002 through March 31, 2002, will receive credit for one month of service and $250.00. Customers will receive their one-month recurring credit within the first 2 billing cycles.

To qualify for the $250.00 credit, the customer must have this service for a minimum of 45 days. When the customer's service has been activated for 45 days, a verification form will be mailed to the customer's billing address within 2 weeks. The customer must return the verification form within 60 days of the date on the verification form. The Company will mail a check for $250.00 to the customer within 30 days of receipt of the verification form.

Order applications must be placed from January 10, 2002 through March 31, 2002, with order completion within 60 days of the order application date. When order completion is delayed due to Company reasons, the order completion date will be extended. This offering is not available with any other promotion. (N)

8. ADVANCED COMMUNICATIONS NETWORKS

8.1 GENERAL
8.1.8 PROMOTIONS (Cont'd)

GG. FRS, ATM and LSS Pricing Plan Promotion – February 1, 2002 through April 30, 2002 (N)

For a limited time only, certain nonrecurring charges for FRS, ATM and LSS will be waived for new customers subscribing to or existing customers upgrading to a 12-month or longer Fixed Period Service Rate Plan from February 1, 2002 through April 30, 2002. These offerings are not available with other FRS, ATM or LSS promotions and do not apply to Special Construction Charges.

Upgraded service includes:

- Existing Fixed Period Service Rate Plan customers who upgrade to a higher transmission speed.

- Existing Fixed Period Service Rate Plan customers who add or install new service at a new premises or location to their existing FRS, ATM or LSS Pricing Plan.

Nonrecurring Charges associated with the following Rate Elements will be waived:

- FRS
  - Access Links for 56/64 kbps and 1.544 Mbps (new or upgrades)
  - Stand-Alone Access Links for 56/64 kbps and 1.544 Mbps (new or upgrades)
  - User-to-Network Interface (UNI) ports and Network-to-Network Interface (NNI) ports for 56/64 kbps, 4-wire, 1.544 Mbps and 45 Mbps (new or upgrades)
  - PVCs associated with new service for 56/64 kbps, 4-wire, 1.544 Mbps or 45 Mbps
  - Central Office Connecting Channels (COCC) for 56/64 kbps, 1.544 Mbps or 45 Mbps (new) (N)

8. ADVANCED COMMUNICATIONS NETWORKS

8.1 GENERAL
8.1.8 PROMOTIONS (Cont'd)

GG. FRS, ATM and LSS Pricing Plan Promotion – February 1, 2002 through April 30, 2002 (N)

Rate Elements included in the above promotion are (Cont'd):

- ATM
  - Access Links for 1.544 Mbps, 45 Mbps, 155 Mbps or 622 Mbps (new or upgrades)
  - Stand-Alone Access Links for 45 Mbps or 155 Mbps (new or upgrades)
  - ATM Ports for 1.544 Mbps, 45 Mbps, 155 Mbps or 622 Mbps (new or upgrades)
  - VPCs/VCCs for new service
  - Central Office Connecting Channels (COCC) for new service
  - IMA Ports for new service

- LSS
  - LAN Links for 10 Mbps, 45 Mbps or 100 Mbps (new or upgrades)
  - Remote LAN Links for 10 Mbps or 45 Mbps
  - LSS to ATM Connectivity for new service

Customer orders must be placed from February 1, 2002 through April 30, 2002, with order completion for FRS – DS1 and below within 60 days of the order date and FRS – DS3, ATM and LSS within 120 days of the order date. When order completion is delayed due to Company reasons, the order completion date will be extended. Termination Liability or Discontinuance Charges will not apply. (N)

8. ADVANCED COMMUNICATIONS NETWORKS

8.1 GENERAL
8.1.8 PROMOTIONS (Cont'd)

HH. *QWEST DSL PRO* Service Promotion – April 1, 2002 through June 30, 2002. (N)

For a limited time only, nonrecurring charges will be waived for all new customers subscribing to *QWEST DSL PRO DELUXE*, *QWEST DSL PRO 640 KBPS*, *QWEST DSL PRO 1 MBPS*, *QWEST DSL PRO 4 MBPS* or *QWEST DSL PRO 7 MBPS* Service from April 1, 2002 through June 30, 2002. In addition, a $100.00 credit will be issued to customers who order *QWEST DSL PRO* Services during this period.

To qualify for the $100.00 credit, the customer must have this service for a minimum of 45 days. When the customer's service has been activated for 45 days, a verification form will be mailed to the customer's billing address within 2 weeks. The customer must return the verification form within 60 days of the date on the verification form. The Company will mail a check for $100.00 to the customer within 30 days of receipt of the verification form.

Order applications must be placed from April 1, 2002 through June 30, 2002, with order completion within 60 days of the order application date. When order completion is delayed due to Company reasons, the order completion date will be extended. This offering is not available with any other promotion. (N)

8. ADVANCED COMMUNICATIONS NETWORKS

8.1 GENERAL
8.1.8 PROMOTIONS (Cont'd)

JJ. DMT *QWEST DSL 256 and* DMT *QWEST DSL DELUXE* Service Promotion – July 4, 2002 through August 30, 2002. (N)

All new customers who subscribe to DMT *QWEST DSL 256 and* DMT *QWEST DSL DELUXE* Service from July 4, 2002 through August 30, 2002 will receive a one-month recurring credit and a check for $50.00. The recurring one-month credit will appear on the customer's first bill.

When the customer's service has been activated for 45 days, a verification form will be mailed to the billing address. The verification form must be returned to the Company within 45 days from the date of the form to receive the check for $50.00. Upon receipt of the verification form, the Company will mail the check to the customer's billing address within 30 days.

Order applications must be placed from July 4, 2002 through August 30, 2002, with order completion within 60 days of the order application date. When order completion is delayed due to Company reasons, the order completion date will be extended. This offering is not available with any other promotion.

KK. DMT *QWEST DSL PRO* Service Promotion – July 4, 2002 through August 5, 2002.

All new customers who subscribe to DMT *QWEST DSL PRO DELUXE*, DMT *QWEST DSL PRO 640 KBPS*, DMT *QWEST DSL PRO 1 MBPS*, DMT *QWEST DSL PRO 4 MBPS* or DMT *QWEST DSL PRO 7 MBPS* Service from July 4, 2002 through August 5, 2002 will receive two months recurring credit and a check for $75.00. The recurring two month credit will appear on the customer's first bill.

When the customer's service has been activated for 45 days, a verification form will be mailed to the billing address. The verification form must be returned to the Company within 45 days from the date of the form to receive the check for $75.00. Upon receipt of the verification form, the Company will mail the check to the customer's billing address within 30 days.

Order applications must be placed from July 4, 2002 through August 5, 2002, with order completion within 60 days of the order application date. When order completion is delayed due to Company reasons, the order completion date will be extended. This offering is not available with any other promotion. (N)

8. ADVANCED COMMUNICATIONS NETWORKS

8.1 GENERAL
8.1.8 PROMOTIONS (Cont'd)

LL. DMT *QWEST DSL PRO* Service Promotion – August 6, 2002 through September 27, 2002. (N)

For a limited time only, the nonrecurring charges for DMT *QWEST DSL PRO* Services will be waived for customers who apply for new service or for existing customers who apply for service at a new customer premises or location from August 6, 2002 through September 27, 2002. In addition to the nonrecurring charge, qualifying customers will receive one-month recurring credit on their first bill. The DMT *QWEST DSL PRO* Services eligible for this promotion are DMT *QWEST DSL PRO DELUXE*, DMT *QWEST DSL PRO 640 KBPS*, DMT *QWEST DSL PRO 1 MBPS*, DMT *QWEST DSL PRO 4 MBPS* and DMT *QWEST DSL PRO 7 MBPS* Service

Order applications must be placed from – August 6, 2002 through September 27, 2002, with order completion within 60 days of the order application date. When order completion is delayed due to Company reasons, the order completion date will be extended. This offering is not available with any other promotion. (N)

1801 California Street, Denver, Colorado 80202

8. ADVANCED COMMUNICATIONS NETWORKS

8.1 GENERAL
8.1.8 PROMOTIONS (Cont'd)

MM. DMT *QWEST DSL 256 and* DMT *QWEST DSL DELUXE* Service Promotion – August 31, 2002 through January 3, 2003. (C)

For a limited time only, the nonrecurring charges for DMT *QWEST DSL 256 and* DMT *QWEST DSL DELUXE* Service will be waived for customers who apply for new service or for existing customers who apply for service at a new customer premises or location. Customers must apply for service from August 31, 2002 through January 3, 2003 to be eligible for the promotion, with order completion (C) within 60 days of the order application date. When order completion is delayed due to Company reasons, the order completion date will be extended. This offering is not available with any other promotion.

8. ADVANCED COMMUNICATIONS NETWORKS

8.1 GENERAL
8.1.8 PROMOTIONS (Cont'd)

NN. ATM, FRS and LSS Pricing Plan Promotion – October 1, 2002 through December 30, 2002. (N)

For a limited time only, from October 1, 2002 through December 30, 2002, all nonrecurring charges for ATM, FRS and LSS will be waived as set forth following. This promotion is for new customers subscribing to a 36-month or greater Fixed Period Service Rate Plan or for existing ATM, FRS and LSS customers who install new service with a 36-month or greater Fixed Period Service Rate Plan service. Should this service be disconnected prior to completion of the Fixed Period Service Rate Plan, the customer would forfeit the nonrecurring waiver and be subject to the Termination Liability and Waiver Policy. This offering is not available with other promotions and does not apply to Special Construction Charges.

Customer orders must be placed from October 1, 2002 through December 30, 2002, with order completion for FRS – DS1 and below within 60 days of the order date and FRS – DS3 and ATM within 120 days of the order date. When order completion is delayed due to Company reasons, the order completion date will be extended. (N)

8. ADVANCED COMMUNICATIONS NETWORKS

8.1 GENERAL
8.1.8 PROMOTIONS (Cont'd)

OO. DMT *QWEST DSL PRO* Service Promotion – November 5, 2002 through January 3, 2003. (N)

For a limited time only, new customers who subscribe to DMT *QWEST DSL PRO* Services will be eligible to receive a check for $100.00 when the following criteria are met.

- Must subscribe to one of the following DMT *QWEST DSL PRO* Services:
  - DMT *QWEST DSL PRO DELUXE*
  - DMT *QWEST DSL PRO 640 kbps*
  - DMT *QWEST DSL PRO 1 MBPS*
  - DMT *QWEST DSL PRO 4 MBPS*
  - DMT *QWEST DSL PRO 7 MBPS*

- Must have service activated for 45 days, within 30 days of completion the Company will mail a verification form to the billing address

- Must return the verification form to the Company within 45 days from the date on the form, upon receipt of the verification form, the Company will mail the check to the customer within 30 days

- Must place order application from - November 5, 2002 through January 3, 2003, with order completion within 60 days of the order application date

When order completion is delayed due to Company reasons, the order completion date will be extended. This offering is not available with any other promotion. (N)

8. ADVANCED COMMUNICATIONS NETWORKS

8.1 GENERAL
8.1.8 PROMOTIONS (Cont'd)

PP. *QWEST DSL* Service Promotion – January 4, 2003 through March 28, 2003. (N)

For a limited time only, customers who install new service or customers who install service at a new premise or location for any of the *QWEST DSL* Services will receive the first month of service for $5.00. In addition the nonrecurring rates will be applied as follows.

1. For customers who subscribe to DMT *QWEST DSL 256 and* DMT *QWEST DSL DELUXE* Service, a nonrecurring charge of $50.00 will be assessed.

2. For DMT *QWEST DSL PRO* Service comprised of DMT *QWEST DSL PRO DELUXE*, DMT *QWEST DSL PRO 640 KBPS*, DMT *QWEST DSL PRO 1 MBPS*, DMT *QWEST DSL PRO 4 MBPS* and DMT *QWEST DSL PRO 7 MBPS*, a nonrecurring charge of $5.00 will be assessed.

Order applications must be placed from January 4, 2003 through March 28, 2003, with order completion within 60 days of the order application date. When order completion is delayed due to Company reasons, the order completion date will be extended. This offering is not available with any other promotion. (N)

8. ADVANCED COMMUNICATIONS NETWORKS

8.1 GENERAL
8.1.8 PROMOTIONS (Cont'd)

QQ. Winter Migration - ATM, FRS and LSS Services (N)

The Winter Migration promotion is available upon request from February 18, 2003 through April 30, 2003. The Winter Migration promotion is available to new customers subscribing to a 1-year term or greater for ATM, FRS or LSS. This promotion is also available to existing customers who have a minimum of 12 months left on their current term plan and who migrate to a higher speed service with a minimum 1-year term plan for ATM, FRS or LSS. This promotion is available only in locations where existing facilities are available. This promotion excludes services requiring facilities construction.

The Company will credit a qualifying customer's bill with 1 month of recurring rates within the first two months of service. This offer may not be combined with any other Private Line Service promotional offer or initiative.

Termination Liability Agreement (TLA) will be waived for existing customers who migrate to a higher bandwidth ATM, FRS or LSS with a 1-year or greater term plan where the contract term of the upgraded service is equal to or greater than the number of the remaining months on the items being upgraded. In addition to TLA, minimum service period will be waived for upgrades.

Customer orders must be placed from February 18, 2003 through April 30, 2003, with order completion for FRS DS1 and below, ATM DS1 and ATM IMA within 60 days; and for FRS DS3, ATM DS3 and above and LSS within 120 days. of When order completion is delayed due to Company reasons, the order completion will be extended. (N)

8. ADVANCED COMMUNICATIONS NETWORKS

8.1 GENERAL
8.1.8 PROMOTIONS (CONT'D)

RR. DMT *QWEST DSL* Service Promotion (C)

For a limited time only, customers who install new service or existing customers who install service at a new premise or location for any of the *QWEST DSL* Services will receive a credit for their first month of service. In addition the nonrecurring rates will be applied as follows.

1. For customers who subscribe to DMT *QWEST DSL 256 and* DMT *QWEST DSL DELUXE* Service, a nonrecurring charge of $25.00 will be assessed.

2. For DMT *QWEST DSL PRO* Service comprised of DMT *QWEST DSL PRO DELUXE*, DMT *QWEST DSL PRO 640 KBPS*, DMT *QWEST DSL PRO 1 MBPS*, DMT *QWEST DSL PRO 4 MBPS* and DMT *QWEST DSL PRO 7 MBPS*, the nonrecurring charge will be waived.

Order applications for DMT *QWEST DSL 256 and* DMT *QWEST DSL DELUXE* Services must be placed from March 29, 2003 through July 15, 2003. Order applications for DMT *QWEST DSL PRO DELUXE*, DMT *QWEST DSL PRO 640 KBPS*, DMT *QWEST DSL PRO 1 MBPS*, DMT *QWEST DSL PRO 4 MBPS* and DMT *QWEST DSL PRO 7 MBPS* Services must be placed from March 29, 2003 through August 1, 2003. All orders must be completed within 60 days of the order application date. When order completion is delayed due to Company reasons, the order completion date will be extended. This offering is not available with any other promotion. (C) (C)

8. ADVANCED COMMUNICATIONS NETWORKS

8.1 GENERAL
8.1.8 PROMOTIONS (Cont'd)

SS. ATM, FRS and LSS Pricing Plan Promotion – May 5, 2003 through August 1, 2003. (N)

For a limited time only, from May 5, 2003 through August 1, 2003, all nonrecurring charges for ATM, FRS and LSS will be waived as set forth, following. This promotion is available to:

- New customers subscribing to a new 36-month or greater Fixed Period Service Rate Plan

- Existing customers who have a 36-month or greater Fixed Period Service Rate Plan with at least 13 months remaining on the plan who order a new 36-month or greater Fixed Period Service Rate Plan at a new location

- Existing customers who have a 36-month or greater Fixed Period Service Rate Plan with at least 13 months remaining on the plan who upgrade existing ports/speeds to a higher capacity service as follows:

  - FRS customer upgrading to a higher speed FRS, ATM or LSS

  - LSS customer upgrading to a higher speed LSS or ATM

  - ATM customer upgrading to a higher speed ATM

  - TLS customer migrating to LSS

Should this service be disconnected prior to completion of the Fixed Period Service Rate Plan, the customer would forfeit the nonrecurring waiver and be subject to the Termination Liability and Waiver Policy. This offering is not available with other promotions, and does not apply to Special Construction Charges. Available only where facilities exist.

Signed Service Agreements must be submitted on or before August 1, 2003, with order applications into the system by August 28, 2003. Order completion for FRS – DS1 and below must be within 90 days of the order application date and for FRS – DS3 and ATM must be within 120 days of the order application date. When order completion is delayed due to Company reasons, the order completion date will be extended. (N)

8. ADVANCED COMMUNICATIONS NETWORKS

8.1 GENERAL
8.1.8 PROMOTIONS (Cont'd)

TT. DMT *QWEST DSL* Service Promotion – July 16, 2003 through September 26, 2003 (N)

For a limited time only, customers who install new service or existing customers who install service at a new premise or location for DMT *QWEST DSL 256* or DMT *QWEST DSL DELUXE* Services will receive a credit for their first month of service. In addition the nonrecurring charge of $50.00 will be assessed.

Order applications for DMT *QWEST DSL 256 and* DMT *QWEST DSL DELUXE* Services must be placed from July 16, 2003 through September 26, 2003. All orders must be completed within 60 days of the order application date. When order completion is delayed due to Company reasons, the order completion date will be extended. This offering is not available with any other promotion. (N)

8. ADVANCED COMMUNICATIONS NETWORKS

8.1 GENERAL
8.1.8 PROMOTIONS (Cont'd)

UU. DMT *QWEST DSL PRO* Service Promotion – August 9, 2003 through September 26, 2003. (N)

For a limited time only, new customers who subscribe to DMT *QWEST DSL PRO* Services will be eligible to receive a check for $100.00 when the following criteria are met.

- Must subscribe to one of the following DMT *QWEST DSL PRO* Services:
  - DMT *QWEST DSL PRO DELUXE*
  - DMT *QWEST DSL PRO 640 kbps*
  - DMT *QWEST DSL PRO 1 MBPS*
  - DMT *QWEST DSL PRO 4 MBPS*
  - DMT *QWEST DSL PRO 7 MBPS*

- Must have service activated for 45 days, within 30 days of completion the Company will mail a verification form to the billing address.

- Must return the verification form to the Company within 45 days from the date on the form. Then the Company will mail the check to the customer within 30 days of receipt of the verification form.

- Must place order application from August 9, 2003 through September 26, 2003, with order completion within 60 days of the order application date.

When order completion is delayed due to Company reasons, the order completion date will be extended. This offering is not available with any other promotion. (N)

8. ADVANCED COMMUNICATIONS NETWORKS

8.1 GENERAL
8.1.8 PROMOTIONS (Cont'd)

VV. DMT *QWEST DSL* Service Promotion – September 27, 2003 through October 24, 2003 (N)

For a limited time only, customers who install new service or existing customers who install service at a new premise or location for DMT *QWEST DSL 256* or DMT *QWEST DSL DELUXE* Services will only be assessed a nonrecurring charge of $50.00. Customers who install new service or existing customers who install service at a new premise or location for DMT *QWEST DSL PRO DELUXE*, DMT *QWEST DSL PRO 640 KBPS*, DMT *QWEST DSL PRO 1 MBPS*, DMT *QWEST DSL PRO 4 MBPS or* DMT *QWEST DSL PRO 7 MBPS* Services will have their nonrecurring charge waived.

Order applications for the aforementioned services must be placed from September 27, 2003 through October 24, 2003. All orders must be completed within 60 days of the order application date. When order completion is delayed due to Company reasons, the order completion date will be extended. This offering is not available with any other promotion and is not available to *QWEST DSL* Volume Plan subscribers. (N)

8. ADVANCED COMMUNICATIONS NETWORKS

8.1 GENERAL
8.1.8 PROMOTIONS (Cont'd)

WW. ATM, FRS and LSS Pricing Plan Promotion – October 6, 2003 through December 31, 2003. (N)

For a limited time only, from October 6, 2003 through December 31, 2003, all nonrecurring charges for ATM, FRS and LSS will be waived as set forth, following. This promotion is available to:

- New customers subscribing to a new 36-month or greater Fixed Period Service Rate Plan and existing customers signing a contract renewal for a 36-month or greater Fixed Period Service Rate Plan

- Existing customers who have a 36-month or greater Fixed Period Service Rate Plan with at least 13 months remaining on the plan can add new locations

- Existing customers who have a 36-month or greater Fixed Period Service Rate Plan with at least 13 months remaining on the plan who upgrade existing Access Links and/or ports/speeds to a higher capacity service as follows:

  - FRS customer upgrading to a higher speed FRS, ATM or LSS

  - LSS customer upgrading to a higher speed LSS or ATM

  - ATM customer upgrading to a higher speed ATM

  - TLS customer migrating to LSS

Should this service be disconnected prior to completion of the Fixed Period Service Rate Plan, the customer would forfeit the nonrecurring waiver and be subject to the Termination Liability and Waiver Policy. This offering is not available with other promotions, and does not apply to Special Construction Charges. Available only where facilities exist.

Signed Service Agreements must be submitted on or before December 31, 2003, with order applications into the system by January 29, 2004. Order completion for FRS – DS1 and below must be within 90 days of the order application date and for FRS – DS3 and ATM must be within 120 days of the order application date. When order completion is delayed due to Company reasons, the order completion date will be extended. (N)

8. ADVANCED COMMUNICATIONS NETWORKS

8.1 GENERAL
8.1.8 PROMOTIONS (CONT'D)

XX. DMT *QWEST DSL* Service Promotion – October 25, 2003 through December 12, 2003 (N)

For a limited time only, customers who install new service or existing customers who install service at a new premise or location will only be assessed a nonrecurring charge of $25.00 for the services listed below:

- DMT *QWEST DSL 256*
- DMT *QWEST DSL DELUXE*
- DMT *QWEST DSL PRO DELUXE*
- DMT *QWEST DSL PRO 640 KBPS*
- DMT *QWEST DSL PRO 1 MBPS*
- DMT *QWEST DSL PRO 4 MBPS*
- DMT *QWEST DSL PRO 7 MBPS*

Order applications for the aforementioned services must be placed from October 25, 2003 through December 12, 2003. All orders must be completed within 60 days of the order application date. When order completion is delayed due to Company reasons, the order completion date will be extended. This offering is not available with any other promotion and is not available to *QWEST DSL* Volume Plan subscribers. (N)

8. ADVANCED COMMUNICATIONS NETWORKS

8.1 GENERAL
8.1.8 PROMOTIONS (Cont'd)

YY. DMT *Qwest Choice DSL* and DMT *Qwest DSL 640k* Service Promotion – December 13, 2003 through February 27, 2004 (T)

For a limited time only, the nonrecurring charges for DMT *Qwest Choice DSL* and DMT *Qwest DSL 640k* Service will be waived for customers who apply for new service or for existing customers who apply for service at a new customer premises or location. Customers must apply for service from December 13, 2003 through February 27, 2004 to be eligible for the promotion, with order completion within 60 days of the order application date. When order completion is delayed due to Company reasons, the order completion date will be extended. This offering is not available with any other promotion and is not available to *QWEST DSL* Volume Plan subscribers. (T)

ZZ. DMT *Qwest Choice DSL*, DMT *Qwest DSL 640k and* CAP *Qwest DSL 640k* Service Promotion – December 13, 2003 through March 11, 2004 (T)

For a limited time only, DMT *Qwest Choice DSL*, DMT *Qwest DSL 640k* and CAP *Qwest DSL 640k* customers who subscribe to 36- or 60-Month Pricing Plans may switch to a Monthly Pricing Plan without incurring nonrecurring charges or Termination Liability. Customers must apply for this offering from December 13, 2003 through March 11, 2004 to be eligible for the promotion, with order completion within 60 days of the order application date. When order completion is delayed due to Company reasons, the order completion date will be extended. This offering is not available with any other promotion. (T) (T) (T)

8. ADVANCED COMMUNICATIONS NETWORKS

8.1 GENERAL
8.1.8 PROMOTIONS (Cont'd)

A1. DMT *Qwest Choice DSL Deluxe* Service Promotion – February 7, 2004 through February 27, 2004 (N)

For a limited time only, the nonrecurring charge for DMT *Qwest Choice DSL Deluxe* Service will be waived for customers who apply for new service and the Speed/Destination Channel Change Charge will be waived for existing *Qwest Choice DSL* and *Qwest DSL 640k* customers who upgrade to DMT *Qwest Choice DSL Deluxe* Service. Customers must apply for service from February 7, 2004 through February 27, 2004 to be eligible for the promotion, with order completion within 60 days of the order application date. When order completion is delayed due to Company reasons, the order completion date will be extended. This offering is not available with any other promotion and is not available to *QWEST DSL* Volume Plan subscribers. (N)

8. ADVANCED COMMUNICATIONS NETWORKS

8.1 GENERAL
8.1.8 PROMOTIONS (Cont'd)

A2. ATM, FRS and LSS Pricing Plan Promotion – March 1, 2004 through May 28, 2004. (N)

For a limited time only, from March 1, 2004 through May 28, 2004, all nonrecurring charges for ATM, FRS and LSS will be waived as set forth, following. This promotion is available to:

- New customers subscribing to a new 36-month or greater Fixed Period Service Rate Plan and existing customers signing a contract renewal for a 36-month or greater Fixed Period Service Rate Plan

- Existing customers who have a 36-month or greater Fixed Period Service Rate Plan with at least 13 months remaining on the plan can add new locations

- Existing customers who have a 36-month or greater Fixed Period Service Rate Plan with at least 13 months remaining on the plan who upgrade existing Access Links and/or ports/speeds to a higher capacity service as follows:

  - FRS customer upgrading to a higher speed FRS, ATM or LSS

  - LSS customer upgrading to a higher speed LSS or ATM

  - ATM customer upgrading to a higher speed ATM

  - TLS customer migrating to LSS

Should this service be disconnected prior to completion of the Fixed Period Service Rate Plan, the customer would forfeit the nonrecurring waiver and be subject to the Termination Liability and Waiver Policy. This offering is not available with other promotions, and does not apply to Special Construction Charges. Available only where facilities exist.

Signed Service Agreements must be submitted on or before May 28, 2004 with order applications into the system by June 26, 2004. Order completion for FRS – DS1 and below must be within 90 days of the order application date and for FRS – DS3 and ATM must be within 120 days of the order application date. When order completion is delayed due to Company reasons, the order completion date will be extended. (N)

8. ADVANCED COMMUNICATIONS NETWORKS

8.1 GENERAL
8.1.8 PROMOTIONS (Cont'd)

A3. *Qwest Choice DSL*, *Qwest Choice DSL Deluxe* and Stand Alone *Qwest DSL* Promotion – February 28, 2004 through May 28, 2004 (S-y)

For a limited time only, the nonrecurring charge for *Qwest Choice DSL*, *Qwest Choice DSL Deluxe* and Stand Alone *Qwest DSL* will be one (1) cent for customers who apply for new service and the Speed/Destination Channel Change Charge will be waived for existing *Qwest Choice DSL* and *Qwest DSL 640k* customers who upgrade to either *Qwest Choice DSL Deluxe* or Stand Alone *Qwest DSL*. Customers must apply for service from February 28, 2004 through May 28, 2004 to be eligible for the promotion, with order completion within 60 days of the order application date. When order completion is delayed due to Company reasons, the order completion date will be extended. This offering is not available (S-y) with any other promotion and is not available as part of the *QWEST DSL* Volume (C-x) Plans. (C-x)

(x) Issued under the authority of Special Permission No. 04-014.

(y) Reissued matter filed under Transmittal No. 186, to become effective February 28, 2004.

8. ADVANCED COMMUNICATIONS NETWORKS

8.1 GENERAL
8.1.8 PROMOTIONS (Cont'd)

A4. *Qwest Choice DSL, Qwest Choice DSL Deluxe* and Stand Alone *Qwest DSL* Promotion – May 29, 2004 through July 30, 2004 (N)

For a limited time only, the nonrecurring charge for *Qwest Choice DSL, Qwest Choice DSL Deluxe* and Stand Alone *Qwest DSL* will be $.99 for customers who apply for new service and the Speed/Destination Channel Change Charge will be waived for existing *Qwest Choice DSL* and *Qwest DSL 640k* customers who upgrade to either *Qwest Choice DSL Deluxe* or Stand Alone *Qwest DSL*. Customers must apply for service from May 29, 2004 through July 30, 2004 to be eligible for the promotion, with order completion within 60 days of the order application date. When order completion is delayed due to Company reasons, the order completion date will be extended. This offering is not available with any other promotion and is not available as part of the *QWEST DSL* Volume Plans. (N)

8. ADVANCED COMMUNICATIONS NETWORKS

8.1 GENERAL
8.1.8 PROMOTIONS (CONT'D)

A5. ATM, FRS and LSS Pricing Plan Promotion – July 31, 2004 through October 31, 2004. (N)

For a limited time only, from July 31, 2004 through October 31, 2004, all nonrecurring charges for ATM, FRS and LSS will be waived as set forth, following. This promotion is available to:

- New customers subscribing to a new 36-month or greater Fixed Period Service Rate Plan and existing customers signing a contract renewal for a 36-month or greater Fixed Period Service Rate Plan

- Existing customers who have a 36-month or greater Fixed Period Service Rate Plan with at least 13 months remaining on the plan can add new locations

- Existing customers who have a 36-month or greater Fixed Period Service Rate Plan with at least 13 months remaining on the plan who upgrade existing Access Links and/or ports/speeds to a higher capacity service as follows:

  - FRS customer upgrading to a higher speed FRS, ATM or LSS

  - LSS customer upgrading to a higher speed LSS or ATM

  - ATM customer upgrading to a higher speed ATM

  - TLS customer migrating to LSS

Should this service be disconnected prior to completion of the Fixed Period Service Rate Plan, the customer would forfeit the nonrecurring waiver and be subject to the Termination Liability and Waiver Policy. This offering is not available with other promotions, and does not apply to Special Construction Charges. Available only where facilities exist.

Signed Service Agreements must be submitted on or before October 31, 2004 with order applications into the system by November 29, 2004. Order completion for FRS – DS1 and below must be within 90 days of the order application date and for FRS – DS3 and ATM must be within 120 days of the order application date. When order completion is delayed due to Company reasons, the order completion date will be extended. (N)

8. ADVANCED COMMUNICATIONS NETWORKS

8.1 GENERAL
8.1.8 PROMOTIONS (CONT'D)

A6. *Qwest Choice DSL*, *Qwest Choice DSL Deluxe* and Stand Alone *Qwest DSL* Promotion – July 31, 2004 through October 22, 2004 (N)

For a limited time only, the nonrecurring charge for *Qwest Choice DSL*, *Qwest Choice DSL Deluxe* and Stand Alone *Qwest DSL* will be $9.99 for customers who apply for new service. For customers ordering new *Qwest Choice DSL Deluxe* or upgrading from *Qwest Choice DSL* to *Qwest Choice DSL Deluxe*, the monthly recurring rate will be reduced to $26.99 for the first 3 months the *Qwest Choice DSL Deluxe* is in service after the initial 3 months the monthly rate will revert back to the current rate of $28.00. The Speed/Destination Channel Change Charge will be waived when:

- Upgrading from *Qwest Choice DSL* to *Qwest Choice DSL Deluxe*
- Changing from Stand Alone *Qwest DSL* to either *Qwest Choice DSL Deluxe* or any *QWEST DSL PRO* Service
- Upgrading from *Qwest DSL 640k* to *Qwest Choice DSL Deluxe*
- Upgrading from either *Qwest Choice DSL* or *Qwest Choice DSL Deluxe* to any *QWEST DSL PRO* Service

Customers must apply for service from July 31, 2004 through October 22, 2004 to be eligible for the promotion, with order completion within 60 days of the order application date. When order completion is delayed due to Company reasons, the order completion date will be extended. This offering is not available with any other promotion and is not available as part of the *QWEST DSL* Volume Plans. (N)

8. ADVANCED COMMUNICATIONS NETWORKS

8.2 PUBLIC PACKET SWITCHING NETWORK (T)(M)

8.2.1 GENERAL

Public Packet Switching Network (PPSN) is a service, which utilizes packet switching technology and digital transmission facilities to provide common user switched data transport. PPSN consists of Packet Switch Nodes (PSN), Packet Switch Service Points (PSSPs) with modems or data service units (DSUs) and digital facilities. PPSN provides for simultaneous two-way transmission of data signals at various speeds within a PSSP, between two PSSPs, or between a PSSP and a PSN. PPSN connects customers to other customers (end users, Information Service Providers, Interexchange Carriers and other Packet Networks) served from PSSPs and PSNs. (T)

Messages are transported through the network in data packets. Packets remain in the proper sequence by means of the establishment of virtual circuits using transport capabilities of the X.25 or X.75 protocols.

Customers may access the PPSN at those wire centers where PSSPs and/or PSNs are located. These locations are listed in the National Exchange Carrier Association, Inc., Tariff F.C.C. No. 4.

A. Types of Access

PPSN provides the ability for customers to originate or terminate data calls to other customers connected to the service. The type of service available to a customer is dependent on the manner in which the customer accesses the network. There are five types of access available:

- Public Dial Access (to Packet Switch Service Points)
- PSSP Access (via Private Line Transport Service)
- PSN Access (via Private Line Transport Service)
- Private Dial Access (to Packet Switch Service Points) (M)

Certain material on this page formerly appeared on Page 8-2
Certain material previously found on this page can now be found on Pages 8-430 and 8-431.

8. ADVANCED COMMUNICATIONS NETWORKS

8.2 PUBLIC PACKET SWITCHING NETWORK (T)(M)

8.2.1 GENERAL (T)

A. Types of Access (Cont'd)

1. Public Dial Access (to Packet Switch Service Points)

   Customers may access the PPSN Service Public Dial Access ports at PSSPs by dialing the 7- or 10-digit telephone number assigned to the port. The rates and charges for the circuit-switched call placed over the voice telephone network are not included in this service. The charges for the circuit-switched call will be charged by the vendor of that service directly to the customer. In addition, the rates and charges for exchange services are not included. (T) (T)

   Public Dial Access ports provide X.3, X.28 and X.29 asynchronous protocol connections at 300 and 1200 bps, 2.4 and 9.6 kbps and may originate calls to PSSP and PSN Access Ports only. All calls originated from Public Dial Access Ports must be billed to the called party (Reverse Charge). If the called party does not accept the charges, the call will be blocked and cleared.

2. PSSP Access (Via Private Line Transport Service)

   Customers may access the PPSN Service at PSSPs via analog or digital Private Line Transport Service channels as described in Section 7, preceding. Analog Private Line Service - Voice Grade, VG6 or VG10, channels may be used to access the analog ports or Digital Data Service channels may be used to access the synchronous digital ports.

   PSSP Access Ports may be either analog or digital synchronous X.25 protocol. Analog ports provide synchronous connections to the PSSP at speeds of 2.4, 4.8, or 9.6 kbps with X.25 protocol.

   PSSP Access Ports may both originate and terminate calls (messages) as described following: (M)

Certain material on this page formerly appeared on Page 8-3.
Certain material previously found on this page can now be found on Page 8-50.

8. ADVANCED COMMUNICATIONS NETWORKS

8.2 PUBLIC PACKET SWITCHING NETWORK (T)(M)

8.2.1 GENERAL (T)

A.2. (Cont'd)

a. Originating Calls

Calls may be placed to other PSSP Access Ports or to PSN Access Ports. Originating calls are initiated by the PSSP Access customer and are billed according to the billing option selected as follows:

Prepaid (T)

Unless specifically identified on a call by call basis all originating traffic will be charged to the calling party.

Reverse Charge Billing (T)

Unless specifically identified on a call by call basis all originating traffic will be reverse charged to the called party.

b. Terminating Calls

Terminating calls may be received from originating Dial Access Ports, PSSP Access Ports, or PSN Access Ports. The types of calls received are dependent on the billing option selected as follows:

Reverse Charge Acceptance (T)

Customers who select this option will accept the charges for all calls sent to the network address(es) assigned to the customer.

Reverse Charge Denied (T)

Customers who select this option will only be able to receive calls that have been billed to the originating caller (prepaid). When this option is elected, calls from dial access customers cannot be received. (M)

Certain material on this page formerly appeared on Page 8-4.
Certain material previously found on this page can now be found on Page 8-85.

8. ADVANCED COMMUNICATIONS NETWORKS

8.2 PUBLIC PACKET SWITCHING NETWORK (T)(M)

8.2.1 GENERAL (T)

A. Types of Access (Cont'd)

3. PSN Access (Via Private Line Transport Service)

Packet Switch Node (PSN) Ports provide the customer with direct access to a Packet Switch Node. The customer may access the PSN Ports via Analog Private Line Service - Voice Grade, VG6 or VG10, or Digital Data Service channels as described in Section 7. PSN Access Ports may be either X.25 or X.75 protocol connections at speeds of 9.6 kbps analog or 9.6 or 56 kbps digital. (T)

PSN Access Ports may both originate or terminate calls (messages) as described following:

a. Originating Calls

Originating calls may be placed to other PSN Access Ports or to PSSP Access Ports. Originating calls are initiated by the PSN Access customer and are billed according to the default billing option selected:

<u>Prepaid</u> (T)

Unless specifically identified on a call by call basis all originating traffic will be charged to the calling party.

<u>Reverse Charge Billing</u> (T)

Unless specifically identified on a call by call basis all originating traffic will be reverse charged to the called party.

b. Terminating Calls

Terminating Calls may be received from originating Private or Public Dial Access Ports, PSSP Access Ports or PSN Access Ports. PSN Access customers must subscribe to Reverse Charge Acceptance. (M)

Certain material on this page formerly appeared on Page 8-5.
Certain material previously found on this page can now be found on Pages 8-298 and 8-332.

8. ADVANCED COMMUNICATIONS NETWORKS

8.2 PUBLIC PACKET SWITCHING NETWORK (T)(M)

8.2.1 GENERAL (T)

A. Types of Access (Cont'd)

4. Private Dial Access (to Packet Switch Service Points)

Customers may access the PPSN Private Dial Access ports at PSSPs by dialing the unique 7- or 10-digit telephone number assigned to the port(s). The rates and charges for the circuit switched call placed over the voice telephone network are not included in this service. The charges for the circuit switched call will be charged by the vendor of that service directly to the customer. (T)

Private Dial Access ports provide X.3, X.28 and X.29 asynchronous protocol connections at 300 and 1200 bps, 2.4 and 9.6 kbps and synchronous X.32 protocol connections at 9.6 kbps. Private Dial Access ports may originate calls to PSSP and PSN Access ports only. All calls originating from Private Dial Access ports are billed according to 2.a., preceding.

The Private Dial Access port includes a connection to the local switched telecommunications network for the termination of voice telephone network calls at the PSSP. This connection does not provide for a listing in the local exchange telephone directory, and may be arranged as a single line or, for multiple lines, they may be provided in a hunting arrangement. (M)

Certain material on this page formerly appeared on Page 8-6.
Certain material previously found on this page can now be found on Page 8-2.

8. ADVANCED COMMUNICATIONS NETWORKS

8.2 PUBLIC PACKET SWITCHING NETWORK (T)(M)
8.2.1 GENERAL (Cont'd) (T)

B. Performance and Interconnection Specifications

PPSN Service provides high quality transport of data using packet switching and digital transmission facilities. The customer shall provide data terminal equipment in accordance with the interface specifications as described in the Qwest Corporation Technical Publication PUB 77359. Flexible interconnection arrangements are available to the customer as described following:

1. Public Dial Access

Public Dial Access is initiated by the customer dialing the PSSP access number (NPA) N29-2929 via the circuit switched telephone network. Dial Access supports asynchronous protocol only at transmission speeds of 300 and 1200 bps and 2.4 and 9.6 kbps.

- Dial access is not recommended from multiparty exchange service.

- To preclude operator interruptions, public dial access is not recommended from a coin operated telephone except on a third party or credit card basis.

2. PSSP Access

PSSP Access is provided through channels (circuits) as defined in Section 7, preceding, to connect the customer through a modem or data service unit (DSU) to a port on the PSSP. PSSP Access supports synchronous X.25 protocol and has a unique network address. (M)

Certain material on this page formerly appeared on Page 8-7.
Certain material previously found on this page can now be found on Page 8-3.

8. ADVANCED COMMUNICATIONS NETWORKS

8.2 PUBLIC PACKET SWITCHING NETWORK (T)(M)

8.2.1 GENERAL (T)

B.2. (Cont'd)

The X.25 protocol provides the capability of establishing multiple virtual communication links from the customer through the PPSN Network. X.25 protocol ports will interface with analog or digital channels. Analog speeds are 2.4, 4.8 and 9.6 kbps. Digital speeds are 2.4, 4.8, 9.6, and 56 kbps.

3. PSN Access

PSN Access is provided through channels (circuits) as defined in Section 7, preceding, to connect a customer directly to a port on the PSN. This arrangement supports high speed 9.6 or 56 kbps channels and either X.25 or X.75 protocol. X.75 protocol provides load distribution. PSN Access has the capability of establishing multiple virtual communication links from the customer through the PPSN.

Analog access is available only at 9.6 kbps. Digital access is available at 9.6 and 56 kbps.

4. Private Dial Access

Private Dial Access is provided through the voice telecommunications network, as defined in 8.2.1.A.4., preceding, to connect the customer, through an analog modem, to a port on the PSSP. Private Dial Access supports asynchronous (X.3, X.28, X.29) protocol only at transmission speeds of 300 and 1200 bps and 2.4 and 9.6 kbps and synchronous (X.32) protocol only at a transmission speed of 9.6 kbps. (M)

Certain material on this page formerly appeared on Page 8-8.
Certain material previously found on this page can now be found on Page 8-4.

8. ADVANCED COMMUNICATIONS NETWORKS

8.2 PUBLIC PACKET SWITCHING NETWORK (T)(M)
8.2.1 GENERAL (Cont'd)

C Generic Names (T)

The following list of Company-designated BSEs identifies the generic equivalent name for each of the BSEs from Telcordia's ONA Services Users Guide, dated July 31, 1991.

GENERIC	QWEST CORPORATION
Call Redirection	Redirection
Call Redirection	Closed User Group
Call Redirection	Fast Select Acceptance
Default Window Size	Nonstandard Window Size
Flow Control Parameter Negotiation - Packet	Flow Control Parameters
Hunt Groups - Packet	Multiple Port Hunt Group
Hunt Groups - Packet	Reverse Charge Acceptance
Incoming Access Barred - Packet	CUG Incoming Access Barred
Logical Channel Layout - Packet	Logical Channel Layout
Logical Channels - Packet	Logical Channel
Multiple Network Address/Port	Multiple Network Addresses
Outgoing Calls Barred - Packet	CUG Outgoing Access Barred
Permanent Virtual Circuit - Packet	Permanent Virtual Circuit
Reverse Charge Request Option - Packet	Reverse Charge Option (M)

Certain material on this page formerly appeared on Page 8-10.
Certain material previously found on this page can now be found on Page 8-51.

8. ADVANCED COMMUNICATIONS NETWORKS

8.2 PUBLIC PACKET SWITCHING NETWORK (Cont'd) (T)(M)

8.2.2 REGULATIONS

A. General

1. PSSP and PSN access customers must subscribe to an adequate number of channels to handle terminating calls in order not to impair the performance of PPSN. (T)

2. Multiple Network Addresses are available in blocks of 10. One address is included with the port. (T) (T)(M)

Certain material on this page formerly appeared on Page 8-9.
Certain material previously found on this page can now be found on Page 8-52.

8. ADVANCED COMMUNICATIONS NETWORKS

8.2 PUBLIC PACKET SWITCHING NETWORK
8.2.2 REGULATIONS (Cont'd)

B. Rate Regulations

1. The minimum service period for PPSN monthly rate categories is 1 month. The minimum period for Public Packet Switching Pricing Plan is 12 months.

2. For dial access, the minimum usage per call for the Network Connection Time is one minute.

3. The minimum usage per call for Packet Transport is one segment.

4. The minimum charge for all Private Line Transport Services channels connected to PPSN is as specified in Section 7 or 17 depending upon the degree of Pricing (C)
Flexibility granted to the customer's wire center. (C)

8. ADVANCED COMMUNICATIONS NETWORKS

8.2 PUBLIC PACKET SWITCHING NETWORK (Cont'd)

8.2.3 RATE ELEMENTS

There are four rate categories which may apply to the PPSN Service:

- PSSP, PSN, and Private Dial Port Access Connection
- Network Usage (Including Dial Access)
- Port Features and Basic Service Elements (BSEs)
- Rearrangement Charge

In addition, the rates and charges for Private Line Transport Service apply for each private line channel between a customer's designated premises and a PSSP or PSN port. Application of the rates and charges apply as described in Section 7 or 17, depending upon the degree of Pricing Flexibility granted to the customer's wire center. The appropriate vendor's rates apply for circuit switched calls to dial access ports. In addition, rates and charges for exchange services are not included. (C) (C)

A. PSSP, PSN, and Private Dial Ports Access Connections

The Access Connection, Access Port rate category provides a dedicated connection at a PSSP or PSN. The Private Dial Access port provides for a local exchange switched connection at the PSSP. There are two types of dedicated access ports, the PSSP Access Port described in 1., following, and the PSN Access Port described in 2., following. The Private Dial Access Port is described in 3., following.

1. PSSP Access Port provides the customer with a dedicated analog or digital access through a modem or Data Service Unit (DSU) to a port on a PSSP. Transmission speeds of 2.4, 4.8, 9.6, and 56 kbps with X.25 protocol are available.

8. ADVANCED COMMUNICATIONS NETWORKS

8.2 PUBLIC PACKET SWITCHING NETWORK (T)(M)

8.2.3 RATE ELEMENTS

A. PSSP, PSN, and Private Dial Ports Access Connections (Cont'd)

2. PSN Access Port provides the customer with dedicated analog or digital access through a modem or DSU to a port on the PSN. Transmission speeds of 9.6 or 56 kbps with X.25 or X.75 protocols are available. (T)

3. Private Dial Access port provides the customer with an analog access, via the public switched network, to a port on a PSSP. Transmission speeds of 300 and 1200 bps and 2.4 and 9.6 kbps with X.3, X.28, X.29 asynchronous protocol and 9.6 kbps with X.32 synchronous protocol are available. (T)

B. Network Connect Time (Dial Access Only) (T)

Dial Access Usage provides for the use of a Dial Access Port other than Private Dial Access Ports, from the time the call is connected until it is terminated. The usage is billed to the terminating network address of the PPSN dial access call on a per minute of connect time basis rounded up to the next whole minute. Usage will be rated at the day rate for that portion of the call in effect during the day rate period (6:00 a.m. 6:00 p.m.) and at the night rate for the portion of the call in effect during the night rate period (after 6:00 p.m. and before 6:00 a.m.) as measured at the Signaling Network Control Center, Denver, Colorado. (T)(M)

Certain material on this page formerly appeared on Page 8-49.
Certain material previously found on this page can now be found on Pages 8-55, 8-56 and 8-57.

8. ADVANCED COMMUNICATIONS NETWORKS

8.2 PUBLIC PACKET SWITCHING NETWORK (T)(M)
8.2.3 RATE ELEMENTS (Cont'd)

C. Port Features and BSEs (T)

The PSSP and PSN Access customers may select the following port features and BSEs. Some of these features and BSEs are offered at no additional monthly charge. See 8.4.3, following. (T)

1. Access (Asynchronous Only) - One of these three must be selected:

   a. Incoming Calls Barred - The access port is prevented from accepting incoming virtual calls. (T)

   b. Outgoing Calls Barred - The access port is prevented from placing outgoing virtual calls. (T)

   c. Two Way Access - The access port is capable of accepting incoming and placing outgoing calls. (T)

2. Auto Call (Asynchronous only) - Allows the subscriber to access a single, predefined address in lieu of the normal call initiation process. The port may be limited to the sole access of this single address. Where available, the subscriber may override the "Auto Call" option and call another address. (T)

3. Call Redirection (BSE) (Asynchronous and X.25) - At a customer request or in the event of a port failure calls will be directed to a single alternate address. This feature requires the customer to have an alternate port and line designated for this purpose. This feature works automatically concurrent with call initiation. (T)

4. Closed User Group (CUG) (BSE) (Asynchronous, and X.25) - Provides transmission via virtual channels among several specific network addresses arranged into a subnetwork. Each network address may be arranged in a CUG with as many as 10 CUG's available per subscribing host. CUG options are: (T)

   a. CUG Incoming Access Barred (BSE) - Allows a member of the CUG to originate calls to other members of that CUG, but not receive incoming calls from members of that CUG. (T) (M)

Certain material on this page formerly appeared on Page 8-50.
Certain material previously found on this page can now be found on Pages 8-56 and 8-57.

8. ADVANCED COMMUNICATIONS NETWORKS

8.2 PUBLIC PACKET SWITCHING NETWORK (T)(M)
8.2.3 RATE ELEMENTS

C.4. (Cont'd)

b. CUG with Incoming Access - Allows a member of a CUG to receive incoming calls from any Data Terminal Equipment (DTE) not in that CUG or from any DTE within that CUG with the "CUG with Outgoing Access" feature. (T)

c. CUG Outgoing Access Barred (BSE) - Allows a member of a CUG to receive calls from other members of that CUG, but not originate any calls to members of the CUG. (T)

d. CUG with Outgoing Access - Allows a member of a CUG to make outgoing calls to any DTE not in that CUG and to any DTE within that CUG with the "CUG with Incoming Access" feature. (T)

e. CUG Access Only - No incoming or outgoing calls allowed outside of that CUG. (T)

5. Fast Select Acceptance (BSE) (Asynchronous and X.25) - Permits the request of up to 124 octets of user data in the call initiation packet and acceptance of up to 124 octets of data in the call termination packet. Additional data packets can be accepted following the acceptance of the call initiation packet. (T)

6. Flow Control Parameters (BSE) (Asynchronous, X.25 and X.75) - Permits negotiation on a per call basis of the flow control parameter window size for each direction of data transmission in the network. Window size values of two through seven are supported. Default value is two. Maximum packet size of 256 octets is supported. Default packet size is 128 octets. (T)

7. Link Level Parameters (X.25 and X.75) - Allows the subscriber to specify link level, acknowledgment timer, number of retransmission attempts, and frame size. (T)

8. Logical Channel (BSE) (X.25 and X.75) - Allows the DTE to derive multiple logical channels from a single physical access line. This is accomplished by specifying the logical channel number on every packet that crosses the Network interface. (T)

(M)

Certain material on this page formerly appeared on Page 8-51.
Certain material previously found on this page can now be found on Page 8-87.

8. ADVANCED COMMUNICATIONS NETWORKS

8.2 PUBLIC PACKET SWITCHING NETWORK (T)(M)

8.2.3 RATE ELEMENTS

C. Port Features and BSEs (Cont'd)

9. Logical Channel Layout (BSE) (X.25 and X.75) - Permits the arrangement of logical channels to be configured as incoming, outgoing, two way and/or Private Virtual Circuit (PVC). (T)

10. Mnemonic Addressing (BSE) (Asynchronous, and X.25) - Allows the subscriber to access predefined addresses by utilizing a predesignated alphanumeric unique character(s) in lieu of the normal call initiation process. The port is not limited to sole access of this single address when normal call initiation procedures are followed. (T)

11. Multiple Port Hunt Groups (BSE) (Asynchronous, and X.25) - A group of access ports with a single data network address. The Maximum number of ports available per hunt group is 16. (T)

12. Multiple Network Addresses (BSE) (X.25 only) - One address is included with the port. More than one network address may be assigned to a single access port. Multiple addresses may be purchased in blocks of 10. (T)

13. Network Terminal Profile (Asynchronous only) - Permits assignment of a profile representing the X.3, X.28 and X.29 parameter configuration of the user's asynchronous terminal. (T) (M)

Certain material on this page formerly appeared on Page 8-52.
Certain material previously found on this page can now be found on Page 8-88.

8. ADVANCED COMMUNICATIONS NETWORKS

8.2 PUBLIC PACKET SWITCHING NETWORK (T)(M)

8.2.3 RATE ELEMENTS

C. Port Features and BSEs (Cont'd)

14. Nonstandard Window Size (BSE) (Asynchronous, X.25 and X.75) - Permits the customer to select a window size of two through seven for either or both directions of transmission. Standard default value is two. (T)

15. Permanent Virtual Circuit (BSE) (Asynchronous, X.25 and X.75) - Permits transmission between two Data Terminal Equipment (DTEs) on the network without the initial packet to establish the call. The transmission path is predefined throughout the network. The default window size for both directions of transmission is two. (T)

16. Reverse Charge Option (BSE) - Allows for the billing of usage charges associated with calls to be billed to the terminating network address. (T)

17. Reverse Charge Acceptance (BSE) (Terminating Calls) - Customers who select this option will accept the charges for all calls sent to the network address(es) assigned to the customer. In order to receive calls from a dial access customer, this option must be selected. (T)

18. Throughput Class Negotiation (X.25 and X.75) - Permits negotiation on a per call basis of the throughput class for each direction of data transmission. (T)

19. X.25 Gateway Option (BSE) - Provides the ability to route calls to a private X.25 network on the PPSN using the first three or six digits of the destination address. It is the responsibility of the private network to route calls to the specific destination address. This feature allows a private network to assign individual addresses to end users while having a single interconnection to the Company over which traffic will be delivered. The X.25 Gateway Option is available for either three- or six-digit screening and will be provided on PSN X.25 ports only. (T) (M)

Certain material on this page formerly appeared on Pages 8-52 and 8-53.
Certain material previously found on this page can now be found on Page 8-89.

8. ADVANCED COMMUNICATIONS NETWORKS

8.2 PUBLIC PACKET SWITCHING NETWORK (T)(M)

8.2.3 RATE ELEMENTS

C. Port Features and BSEs (Cont'd)

20. Default Throughput Class - Permits a default value to be used for the throughput class for each direction of data on a per call basis. (T)

21. Fast Select - Permits a user to transmit data prior to the establishment of a virtual circuit. Users may send up to 128 octets (bytes) of data along with a call request packet. In similar fashion, the called party may respond immediately with up to 128 octets (bytes) of data when accepting the call or requesting call clearance. (T)

22. Nonstandard Packet Size - A feature which permits the customer to select a packet size up to 256 octets (bytes). The default value is 128 octets (bytes). (T)

D. Rearrangement Charge (T)

When any feature or group of features listed in 8.2.5.C., following, is added or changed subsequent to initial subscription, a rearrangement charge, as set forth in 8.2.5.D., following, will apply, in addition to the nonrecurring charge associated with each feature added or changed. (T) (T) (M)

Certain material on this page formerly appeared on Pages 8-52 and 8-53.
Certain material previously found on this page can now be found on Page 8-90.

8. ADVANCED COMMUNICATIONS NETWORKS

8.2 PUBLIC PACKET SWITCHING NETWORK (Cont'd) (T)(M)

8.2.4 PRICING PLANS (T)

PPSN may be ordered at the customer's option on a month-to-month basis or for fixed periods of 3 years (36 months) or 5 years (60 months). The optional rate plan allows the PPSN customer to order this service with the assurance that there will be no increases in rates during the fixed period. The optional rate plans apply to the PSSP Access Port, PSN Access Port, Private Dial Access, and Logical Channel rate elements.

A. Fixed Period Service Rate Plans (T)

The customer may subscribe to a 36- or 60-month fixed period service rate plan. (T)
The minimum service period for fixed period service is 12 months. The customer (T)
must specify the length of the fixed period service at the time the service is ordered.

For customers that subscribe to fixed period service of 36 or 60 months, the monthly rates for the entire fixed period will be frozen from Company-initiated increases, at the rates in effect for the fixed period on the service date.

All rate elements of a PPSN service to be included in a fixed period service must be ordered under the same term conditions (i.e., all 36 months or all 60 months) and with the same negotiated service date.

Ports and Logical Channels may be added to an existing fixed period on a month-to-month basis or under the same fixed period rate plan as the existing PPSN, but at the rates and charges in effect at the time of the addition. (M)

Certain material on this page formerly appeared on Page 8-64.
Certain material previously found on this page can now be found on Page 301.

8. ADVANCED COMMUNICATIONS NETWORKS

8.2 PUBLIC PACKET SWITCHING NETWORK (T)(M)

8.2.4 PRICING PLANS

A. Fixed Period Service Rate Plans (Cont'd) (T)

At the end of the fixed period service, the customer may convert to month-to-month or subscribe to a new fixed period service. The monthly rates will be adjusted to those in effect for the new fixed period service. Should the customer not make a choice by the end of the fixed period, the rates will automatically revert to the month-to-month option.

If a rate decrease occurs during the term of an existing fixed rate plan contract, the reduced rates will automatically be applied to the remaining term of the current contract period. (T)

Effective September 1, 1998, customers establishing a Fixed Period Rate Plan, will not receive a rate decrease if the Company decreases rates during the term of the plan. Fixed Period Rate Plans established on or before August 31, 1998, will automatically receive a rate decrease if the Company decreases rates during the term of the plan. (T) (M)

Certain material on this page formerly appeared on Page 8-65.
Certain material previously found on this page can now be found on Page 302.

8. ADVANCED COMMUNICATIONS NETWORKS

8.2 PUBLIC PACKET SWITCHING NETWORK (T)(M)
8.2.4 PRICING PLANS (Cont'd)

B. Upgrades In Rate Plan (T)

Services rated as month-to-month may be upgraded to a fixed period service rate plan at any time the customer chooses without incurring nonrecurring or discontinuance charges, this includes ports and logical channels added subsequently to an existing fixed period rated service but rated as month-to-month (see A., preceding). In addition, customers rated under the 36-month plan may (T) upgrade to the 60-month plan without incurring nonrecurring or discontinuance charges. The monthly rates will be those that are in effect at the time the service is upgraded. New minimum service periods apply to all upgrades.

New minimum service period applies to all Packet Switching Pricing Plan rate elements that are upgraded in the following manner:

- If the service being upgraded has been in place for more than 12 months, minimum period provisions will not apply, or

- If the service being upgraded has been in place for less than 12 months, the time in service will be applied against the minimum period term. (M)

Certain material on this page formerly appeared on Page 8-65.
Certain material previously found on this page can now be found on Page 303.

8. ADVANCED COMMUNICATIONS NETWORKS

8.2 PUBLIC PACKET SWITCHING NETWORK (Cont'd) (T)(M)

8.2.5 RATES AND CHARGES (T)

A. Access Connection - Monthly

1. PSSP Access Port

	USOC	NONRECURRING CHARGE	MONTHLY RATE
• X.25 Protocol - Synchronous Analog per port with modem for transmission speeds of up to:			
- 2.4 kbps	LDZ24	$154.00	$175.00
- 4.8 kbps	LDZ48	154.00	175.00
- 9.6 kbps	LDZ96	154.00	175.00
• X.25 Protocol - Synchronous Digital per port with DSU for transmission speeds of:			
- 2.4 kbps	LDD24	154.00	175.00
- 4.8 kbps	LDD48	154.00	175.00
- 9.6 kbps	LDD96	154.00	175.00
- 56 kbps	LDD56	154.00	175.00 (M)

Certain material on this page formerly appeared on Page 8-115.
Certain material previously found on this page can now be found on Pages 8-333 and 8-334.

8. ADVANCED COMMUNICATIONS NETWORKS

8.2 PUBLIC PACKET SWITCHING NETWORK (T)(M)
8.2.5 RATES AND CHARGES (T)

A. Access Connection - Monthly (Cont'd)

2. PSN Access Port

	USOC	NONRECURRING CHARGE	MONTHLY RATE
• X.25 Protocol - Synchronous Analog per port with modem for transmission speeds of up to:			
- 9.6 kbps	L5Z96	$154.00	$175.00
• X.25 Protocol - Synchronous Digital per port with DSU for transmission speeds of:			
- 9.6 kbps	L5D96	154.00	175.00
- 56 kbps	L5D56	154.00	175.00
• X.75 Protocol - Synchronous Analog per port with modem for transmission speeds of:			
- 9.6 kbps	LDZ97	154.00	175.00
• X.75 Protocol - Synchronous Digital per port with DSU for transmission speeds of:			
- 9.6 kbps	LDD97	154.00	175.00
- 56 kbps	LDD57	154.00	175.00

(M)

Certain material on this page formerly appeared on Page 8-116.
Certain material previously found on this page can now be found on Page 8-335.

8. ADVANCED COMMUNICATIONS NETWORKS

8.2 PUBLIC PACKET SWITCHING NETWORK (T)(M)

8.2.5 RATES AND CHARGES (T)

A. Access Connection - Monthly (Cont'd)

3. Private Dial Access Port

	USOC	NONRECURRING CHARGE	MONTHLY RATE
• Asynchronous (X.3, X.28, X.29 Protocols) Analog per port with exchange dial access connection and modem for transmission speeds of:			
- 300 and 1200 bps and 2.4 kbps	LL512	$154.00	$252.00
- 9.6 kbps	LL596	154.00	252.00
• Synchronous (X.32 Protocol) Analog per port with exchange dial access connection and modem for a transmission speed of:			
- 9.6 kbps	L3XXE	154.00	252.00

(M)

Certain material on this page formerly appeared on Page 8-117.
Certain material previously found on this page can now be found on Page 8-432.

8. ADVANCED COMMUNICATIONS NETWORKS

8.2 PUBLIC PACKET SWITCHING NETWORK (T)(M)
8.2.5 RATES AND CHARGES (Cont'd) (T)

B. Network Usage - Monthly

	RATE PER MINUTE
• Network Connect Time, per dial access minute or fraction thereof:	
- Day rate[1]	$0.060
- Night rate[2]	0.060

[1] Day rate 6:00 a.m. - 6:00 p.m. Local time, Denver, CO.

[2] Night rate after 6:00 p.m. and before 6:00 a.m. Local time, Denver, CO. (M)

Certain material on this page formerly appeared on Page 8-118.
Certain material previously found on this page can now be found on Page 8-58.

8. ADVANCED COMMUNICATIONS NETWORKS

8.2 PUBLIC PACKET SWITCHING NETWORK (T)(M)
8.2.5 RATES AND CHARGES (Cont'd) (T)

C. Port Features - Monthly

	USOC	NONRECURRING CHARGE	MONTHLY RATE
• Incoming Calls Barred	LD91V	–	–
• Outgoing Calls Barred	LD90V	–	–
• Two Way Access	LRV	–	–
• Auto Call, per destination address	LJP	$10.00	$1.00
• Call Redirection	LRD	22.00	8.00
• Closed User Group	LDJ	22.00	8.00
• Default Throughput Class	LHE	10.00	1.00
• Fast Select	FSF	10.00	1.00
• Fast Select Acceptance	LD5FS	10.00	1.00
• Flow Control Parameters	LD5FC	–	–

(M)

Certain material on this page formerly appeared on Page 8-119.
Certain material previously found on this page can now be found on Pages 8-59 and 8-60.

8. ADVANCED COMMUNICATIONS NETWORKS

8.2 PUBLIC PACKET SWITCHING NETWORK (T)(M)
8.2.5 RATES AND CHARGES (T)

C. Port Features – Monthly (Cont'd) (T)

	USOC	NONRECURRING CHARGE	MONTHLY RATE	
• Link Level Parameters	LLE	$10.00	$1.00	(T)
• Logical Channel Layout	LXN	10.00	1.00	
• Mnemonic Addressing	PJS	10.00	1.00	
• Multiple Port Hunt Groups, each address	LDM	22.00	8.00	
• Multiple Network Addresses, blocks of 10 addresses[1]	LDQ	10.00	1.00	
• Network Terminal Profile	LUZ	10.00	1.00	
• Nonstandard Packet Size	LNP	10.00	1.00	(M)

(D)

[1] One address is included with the port. (M)

Certain material on this page formerly appeared on Page 8-119.
Certain material previously found on this page was removed.

8. ADVANCED COMMUNICATIONS NETWORKS

8.2 PUBLIC PACKET SWITCHING NETWORK (T)(M)
8.2.5 RATES AND CHARGES (T)

C. Port Features – Monthly (Cont'd)

	USOC	NONRECURRING CHARGE	MONTHLY RATE
• Nonstandard Window Size	LNW	$10.00	$1.00
• Permanent Virtual Circuit	LDV	22.00	8.00
• Reverse Charge Option[1]	LD4	10.00	–
• Reverse Charge Acceptance[1]	RBN	10.00	–
• Throughput Class Negotiation	LD1	10.00	1.00
• Logical Channels, per port, per channel			
- First 2 channels	L38X1	–	–
- Each additional channel	L38XA	10.00	1.00
• X.25 Gateway Option (PSN X.25 Access Port only)			
- Three digit screening	GTW3X	22.00	8.00
- Six digit screening	GTW6X	22.00	8.00
- Changes and/or additions to three or six digit screening	NRBGT	10.00	1.00

D. Rearrangement Charge, per rearrangement, per order X25 27.00 – (M)

(D)

[1] The nonrecurring charge applies when this feature is installed subsequent to the initial installation of the service. (M) (M)

Certain material on this page formerly appeared on Page 8-120.
Certain material previously found on this page was removed.

8. ADVANCED COMMUNICATIONS NETWORKS

8.2 PUBLIC PACKET SWITCHING NETWORK (T)(M)
8.2.5 RATES AND CHARGES (Cont'd) (T)

E. Access Connection - 36 Months

1. PSSP Access Port

	USOC	NONRECURRING CHARGE	MONTHLY RATE	
• X.25 Protocol - Synchronous Analog per port with modem for transmission speeds of up to:				
- 2.4 kbps	L3L2C	$154.00	$157.50	
- 4.8 kbps	L3L2D	154.00	157.50	
- 9.6 kbps	L3L2E	154.00	157.50	
• X.25 Protocol - Synchronous Digital per port with DSU for transmission speeds of:				
- 2.4 kbps	L3S2C	154.00	157.50	
- 4.8 kbps	L3S2D	154.00	157.50	
- 9.6 kbps	L3S2E	154.00	157.50	
- 56 kbps	L3S2G	154.00	157.50	(M)

(D)

Certain material on this page formerly appeared on Page 8-121.
Certain material previously found on this page was removed.

8. ADVANCED COMMUNICATIONS NETWORKS

8.2 PUBLIC PACKET SWITCHING NETWORK (T)(M)
8.2.5 RATES AND CHARGES (T)

E. Access Connection - 36 Months (Cont'd)

2. PSN Access Port

	USOC	NONRECURRING CHARGE	MONTHLY RATE	
• X.25 Protocol - Synchronous Analog per port with modem for transmission speeds of up to:				
- 9.6 kbps	L3U2E	$154.00	$157.50	
• X.25 Protocol - Synchronous Digital per port with DSU for transmission speeds of:				
- 9.6 kbps	L3V2E	154.00	157.50	
- 56 kbps	L3V2G	154.00	157.50	
• X.75 Protocol - Synchronous Analog per port with modem for transmission speeds of:				
- 9.6 kbps	L3L2K	154.00	157.50	
• X.75 Protocol - Synchronous Digital per port with DSU for transmission speeds of:				
- 9.6 kbps	L3S2K	154.00	157.50	
- 56 kbps	L3S2L	154.00	157.50	(M)

(D)

Certain material on this page formerly appeared on Page 8-122.
Certain material previously found on this page was removed.

8. ADVANCED COMMUNICATIONS NETWORKS

8.2 PUBLIC PACKET SWITCHING NETWORK (T)(M)
8.2.5 RATES AND CHARGES (T)

E. Access Connection - 36 Months (Cont'd)

3. Private Dial Access Port

	USOC	NONRECURRING CHARGE	MONTHLY RATE
• Asynchronous (X.3, X.28, X.29 Protocols) Analog per port with exchange dial access connection and modem for transmission speeds of:			
- 300 and 1200 bps and 2.4 kbps	L352J	$154.00	$226.80
- 9.6 kbps	L352E	154.00	226.80
• Synchronous (X.32 Protocol) Analog per port with exchange dial access connection and modem for a transmission speed of:			
- 9.6 kbps	L3X2E	154.00	226.80

4. Port Features

• Logical Channels, per port, per channel			
- First 2 channels	L3821	–	–
- Each additional channel	L382A	10.00	1.50 (M)

Certain material on this page formerly appeared on Page 8-123.
Certain material previously found on this page can now be found on Page 91.

8. ADVANCED COMMUNICATIONS NETWORKS

8.2 PUBLIC PACKET SWITCHING NETWORK (T)(M)
8.2.5 RATES AND CHARGES (Cont'd) (T)

F. Access Connection - 60 Months

1. PSSP Access Port

	USOC	NONRECURRING CHARGE	MONTHLY RATE
• X.25 Protocol - Synchronous Analog per port with modem for transmission speeds of up to:			
- 2.4 kbps	L3L3C	$154.00	$140.00
- 4.8 kbps	L3L3D	154.00	140.00
- 9.6 kbps	L3L3E	154.00	140.00
• X.25 Protocol - Synchronous Digital per port with DSU for transmission speeds of:			
- 2.4 kbps	L3S3C	154.00	140.00
- 4.8 kbps	L3S3D	154.00	140.00
- 9.6 kbps	L3S3E	154.00	140.00
- 56 kbps	L3S3G	154.00	140.00

(M)

Certain material on this page formerly appeared on Page 8-124.
Certain material previously found on this page can now be found on Pages 8-92 and 8-93.

8. ADVANCED COMMUNICATIONS NETWORKS

8.2 PUBLIC PACKET SWITCHING NETWORK (T)(M)
8.2.5 RATES AND CHARGES (T)

F. Access Connection - 60 Months (Cont'd)

2. PSN Access Port

	USOC	NONRECURRING CHARGE	MONTHLY RATE
• X.25 Protocol - Synchronous Analog per port with modem for transmission speeds of up to:			
- 9.6 kbps	L3U3E	$154.00	$140.00
• X.25 Protocol - Synchronous Digital per port with DSU for transmission speeds of:			
- 9.6 kbps	L3V3E	154.00	140.00
- 56 kbps	L3V3G	154.00	140.00
• X.75 Protocol - Synchronous Analog per port with modem for transmission speeds of:			
- 9.6 kbps	L3L3K	154.00	140.00
• X.75 Protocol - Synchronous Digital per port with DSU for transmission speeds of:			
- 9.6 kbps	L3S3K	154.00	140.00
- 56 kbps	L3S3L	154.00	140.00 (M)

Certain material on this page formerly appeared on Page 8-125.
Certain material previously found on this page can now be found on Page 8-94.

8. ADVANCED COMMUNICATIONS NETWORKS

8.2 PUBLIC PACKET SWITCHING NETWORK (T)(M)
8.2.5 RATES AND CHARGES (T)

F. Access Connection - 60 Months (Cont'd)

3. Private Dial Access Port

	USOC	NONRECURRING CHARGE	MONTHLY RATE
• Asynchronous (X.3, X.28, X.29 Protocols) Analog per port with exchange dial access connection and modem for transmission speeds of:			
- 300 and 1200 bps and 2.4 kbps	L353J	$154.00	$201.60
- 9.6 kbps	L353E	154.00	201.60
• Synchronous (X.32 Protocol) Analog per port with exchange dial access connection and modem for a transmission speed of:			
- 9.6 kbps	L3X3E	154.00	201.60

4. Port Features

• Logical Channels, per port, per channel			
- First 2 channels	L3831	–	–
- Each additional channel	L383A	10.00	1.00

(M)

Certain material on this page formerly appeared on Page 8-126.
Certain material previously found on this page can now be found on Pages 8-95 and 8-96.

8. ADVANCED COMMUNICATIONS NETWORKS

8.3 FRAME RELAY SERVICE (S-y)

8.3.1 GENERAL

A. Description

Frame Relay Service (FRS), employing digital technology, provides high speed access connections and throughput to interstate service providers or provides high speed throughput to intraLATA interstate Local Area Networks (LANs), as well as host access capabilities. For interLATA interstate FRS, the customer must specify the IC to which the service is connected and the means by which the FRS is transported to another state. Utilizing statistical multiplexing, FRS enables users to allocate circuit bandwidth to applications as needed, up to the maximum bandwidth purchased, rather than assigning fixed channels to specific applications. FRS supports transmission speeds up to 44.736 Mbps.

FRS requires the use of customer-provided terminal equipment that functions as a multiplexer/bridge/router. This terminal equipment must be purchased separately from the FRS and must conform to Telecommunications Standardization Sector of the International Telecommunications Union (ITU-T) and American National Standards Institute (ANSI) standards set forth in technical publications. The terminal equipment accumulates customer data and puts it into a frame relay format suitable for transmission over the Frame Relay Advanced Communications Services (ACS) Network.

FRS conforms to ITU-T and ANSI standards set forth in ANSI technical documents (see "Reference To Technical Publications" in Section 0, preceding). Technical Specifications for FRS are delineated in Qwest Corporation Technical Publication PUB 77372. Performance specifications for 44.736 Mbps FRS are delineated in Qwest Corporation Technical Publication PUB 77324 and PUB 77372. (S-y)

<u>Grandfathered Services</u> (N)

As of December 31, 2000, 2-Wire 128 kbps Service, and Fault Tolerant and Priority PVC Features are Grandfathered to existing customers.

Month-to-month customers may retain 2-Wire 128 kbps Service, Fault Tolerant and Priority PVC until December 31, 2001. At that time the Grandfathered service/feature will be discontinued. (N)

(y) Reissued matter filed under Transmittal No. 28, to become effective December 6, 2000.

8. ADVANCED COMMUNICATIONS NETWORKS

8.3 FRAME RELAY SERVICE (S-y)

8.3.1 GENERAL

A. Description (S-y)

Grandfathered Services (Cont'd) (N)

Customers with an existing fixed period plan may retain the service/feature until the expiration date of the fixed period. Customers with fixed periods expiring between December 31, 2000 and November 30, 2001 may extend their contract until December 31, 2001, and retain the service at their contracted rates. Customers must contact their sales representative to request this extension.

Customers with 2-Wire FRS, Fault Tolerant and Priority PVC on a fixed period plan may make additions, rearrangements, changes, or moves of existing service if the service, required equipment, and facilities are available for the duration of the fixed period.

Customers may change their existing 2-Wire FRS to 4-wire FRS, 56 kbps, 1.544 Mbps or fractions thereof, and the Company will waive the nonrecurring change for the new 4-wire service. Month-to-month customers may migrate to 4-wire FRS at no charge until December 31, 2001. Customers under contract may migrate to 4-wire FRS at no charge prior to the expiration date of that contract. (N)

(y) Reissued matter filed under Transmittal No. 28, to become effective December 6, 2000.

8. ADVANCED COMMUNICATIONS NETWORKS

8.3 FRAME RELAY SERVICE (S-y)
8.3.1 GENERAL (Cont'd)

B. Service Elements

1. Network Interface

When an FRS Access Link is used to access the ACS Frame Relay Network, the point at which a customer's data transmissions first enter the network supporting Frame Relay Service is the network interface. It is the point of interconnection between Company communications facilities and customer terminal equipment.

2. Access Link

For 4-Wire 56 kbps through 1.544 Mbps Frame Relay Service, a connecting FRS Access Link provides access to the ACS Frame Relay Network customer facilities at the network interface connecting other frame relay networks' facilities at the network interface with an Information Transfer service element. The 56 kbps Access Link utilizes the 56 kbps Information Transfer service element, a 64 kbps Access Link utilizes the 64 kbps Information Transfer, and the 1.544 Mbps Access Link utilizes the 56 kbps through 1.544 Mbps Information Transfer service elements. (S-y)

A Grandfathered 2-wire 128 kbps Access Link employs Integrated Services (C-y)
Digital Network (ISDN) BRI signaling over a single pair to allow customers to (S-y)
access Frame Relay Service over local loop facilities. The 2-Wire 128 kbps Access Link utilizes a 2-Wire 128 kbps User-To-Network Information Transfer service element and must be connected to a Permanent Virtual Connection(s). The customer's serving wire center must be a Company-designated FRS Service Point.

Frame Relay uni-directional polling is required on the Access Link when used in conjunction with User-To-Network Information Transfer. Frame Relay bi-directional polling is required on the Access Link when used in conjunction with the Network-To-Network Information Transfer. (S-y)

(y) Reissued matter filed under Transmittal No. 28, to become effective December 6, 2000.

8. ADVANCED COMMUNICATIONS NETWORKS

8.3 FRAME RELAY SERVICE
8.3.1 GENERAL

B.2. (Cont'd)

In lieu of the 56 or 64 kbps or 1.544 Mbps 4-Wire FRS Access Link, a Private Line Transport 56 or 64 kbps or any 1.544 Mbps interface in Section 7, 17 and/or Section 15, or an EICT (Expanded Interconnection Channel Termination) DDS, EICT 1.544, or ITP (Interconnect Tie Pair) 1.544 Mbps from Section 21, may be used to access Frame Relay Service. (C)

In lieu of an FRS Access Link, a Private Line Transport DS3 Service Channel Termination (CT) with Clear Channel Capability, as set forth in Section 7 or 17, is used to provide access to a 44.736 Mbps Information Transfer. The DS3 Service CT provides access to the ACS Frame Relay Network switch via a connection between customer facilities at the network interface and an Information Transfer service element. In lieu of the DS3 CT, an EICT 44.736 or ITP 44.736, specified in Section 21, may be used to access FRS. FRS switch locations are designated by the Company and are identified in the National Exchange Carrier Association, Inc. Tariff F.C.C. No. 4. (C)

3. Stand-Alone Access Link

A Stand-Alone Access Link connects customer-premises facilities to frame relay service networks provided by service providers other than the Company. It does not connect to the ACS Frame Relay Network. A Stand-Alone Access Link requires uni-directional polling. Private Line Transport Service (PLTS) Transport Channel mileage rates as set forth in Section 7 or 17, may be required in conjunction with a Stand-Alone Access Link to connect the customer's serving wire center, or node, with the serving wire center, or node, of another frame relay service provider. (C)

8. ADVANCED COMMUNICATIONS NETWORKS

8.3 FRAME RELAY SERVICE (T)(M)

8.3.1 GENERAL

B. Service Elements (Cont'd) (T)

4. Ports

   Ports are part of the FR switch and are the physical entry points for Access Links into the ACS Network. They are originating and terminating points for Permanent Virtual Connections (PVC) transport facilities between FR switches. Ports include the electronic equipment used to connect these service elements to the ACS Network. They enable customers to allocate bandwidth to applications as needed at customer-designated transmission speeds for 4-Wire of up to 56 or 64 kbps, 1.544 Mbps, 44.736 Mbps and for 2-Wire 128 kbps.

5. Service Points

   Service Points are geographical locations designated by the Company where the ACS Network Ports are located and where the ACS Network is accessed. Service Point locations are designated by the Company and are identified in the National Exchange Carrier Association, Inc. Tariff F.C.C. No. 4. When the Company establishes new Service Points, which result in a change of existing FRS, the affected services will be rerated and redesigned to the new Service Point at no charge to the customers.

6. User-To-Network Information Transfer (UNIT)

   The User-To-Network Information Transfer (UNIT) service element transfers information between the User-To-Network Interface (UNI) and the ACS Frame Relay Service Network.

   User-To-Network Information Transfer provides the physical entry point into the ACS Network for Access Links. The UNIT includes the associated port, unidirectional Permanent Virtual Connections (PVCs) and ACS Frame Relay switching equipment. UNIT PVCs are provisioned at customer-selected Committed Information Rates (CIRs), and at port speeds for 4-Wire of 56 or 64 kbps, 112 or 128 kbps, 224 or 256 kbps, 336 or 384 kbps, 448 or 512 kbps, 672 or 768 kbps, or 1.544 Mbps, or 44.736 Mbps and for 2-Wire 128 kbps depending upon the customer's data networking requirements. UNIT provides unidirectional polling between the customer's facilities and the ACS FRS Network. (M)

Certain material on this page formerly appeared on Page 8-14.
Certain material previously found on this page can now be found on Page 8-100.

8. ADVANCED COMMUNICATIONS NETWORKS

8.3 FRAME RELAY SERVICE
8.3.1 GENERAL

B. Service Elements (Cont'd)

7. Network-To-Network Information Transfer (NNIT)

Available on a 4-Wire basis only, the Network-To-Network Information Transfer (NNIT) service element transfers information between the ACS Frame Relay Service Network and another frame relay network.

Network-To-Network Information Transfer provides the physical entry point into the ACS Network for Access Links. The NNIT includes the associated port, unidirectional Permanent Virtual Connections (PVCs) and ACS Frame Relay switching equipment. If the other frame relay service network's switch or facility is not in a location served by a Company serving wire center where an ACS FRS switch is located, private line transport charges will apply, at rates set forth in Sections 7 and 17 of this Tariff. NNIT PVCs are provisioned at customer-selected Committed Information Rates (CIRs), and at port speeds, dependent upon the customer's data networking requirements. (C)

NNIT provides bidirectional polling between the ACS FRS Network and another frame relay network.

8. ADVANCED COMMUNICATIONS NETWORKS

8.3 FRAME RELAY SERVICE (S-y)

8.3.1 GENERAL

B. Service Elements (Cont'd)

8. Permanent Virtual Connection (PVC)

A PVC is a unidirectional logical channel from one Frame Relay Port to another Frame Relay Port within the ACS Network. PVCs are provisioned at customer-selected port speeds, with customer-selected Committed Information Rates (CIRs), depending on the customer's data networking requirements.

Although higher numbers of PVCs may be provided, depending on an individual customer's traffic characteristics, the following are the recommended maximum numbers of PVCs for designated FRS port speeds:

4-WIRE FRS PORT SPEEDS	RECOMMENDED NUMBER OF PVCS	
56 or 64 kbps	30	
112 or 128 kbps	40	
224 or 256 kbps	80	
336 or 384 kbps	120	
448 or 512 kbps	125	
672 or 768 kbps	125	
1.544 Mbps	125	
44.736 Mbps	[1]	(S-y)

GRANDFATHERED 2-WIRE FRS PORT SPEEDS	RECOMMENDED NUMBER OF PVCS	(N) (S-y)
128 kbps	8	(S-y)

[1] The maximum number of PVCs, which may be associated with 44.736 Mbps is 500. (T-y) (S-y)

(y) Reissued matter filed under Transmittal No. 28, to become effective December 6, 2000.

8. ADVANCED COMMUNICATIONS NETWORKS

8.3 FRAME RELAY SERVICE (T)(M)

8.3.1 GENERAL

B. Service Elements (Cont'd) (T)

9. Committed Information Rate (CIR)

Although FRS statistical multiplexing capabilities allow customers with FRS configurations to have aggregate PVC CIRs which are greater than the associated port speed, the actual throughput of aggregated PVC CIRs in use at any time on the same port cannot exceed the port speed.

A customer's data throughput may burst up to the customer's subscribed port speed; however, when data exceeds the CIR, the potential for discard exists. It is recommended that a customer subscribe to a CIR no greater than half the port speed; although, a larger CIR may be accommodated, as indicated below, depending on a specific customer's traffic characteristics.

The customer's CIR should closely match the Open System Interconnection (OSI) Model or equivalent Application and Network Layer protocols for the data application utilized.

CIR Options For Permanent Virtual Connections are delineated in PUB 77372. (M)

Certain material on this page formerly appeared on Pages 8-16 and 8-17.
Certain material previously found on this page can now be found on Pages 8-103 and 8-104.

8. ADVANCED COMMUNICATIONS NETWORKS

8.3 FRAME RELAY SERVICE (S-y)

8.3.1 GENERAL

B. Service Elements (Cont'd)

10. Central Office Connecting Channel (COCC)

When a customer accesses FRS via a private line transport facility which requires multiplexing to be compatible with FRS transmission speeds or requires port to port connectivity, the COCC provides the ongoing interconnection from the multiplexer or other Company facility port to an FRS port. The COCC provides connectivity up to 1.544 Mbps, or up to 44.736 Mbps.

11. Transport Channel

The Transport Channel provides for the transmission facilities between the serving wire center associated with the customer-designated premises and the FRS Service Point or FRS switch; or between an EICT or ITP and the FRS Service Point.

12. Optional Features and Functions (S-y)
(D-y)

a. Customer Network Management (CNM) (T-y)

The Customer Network Management (CNM) optional feature provides the customer with read-only access to information related to FRS faults, usage information, performance management functions and configurations. Customer-provided network management terminal equipment (e.g., workstation) is used to access CNM as delineated in Qwest Corporation Technical Publication PUB 77376. A PVC is used to access CNM in the Company's Public Data Network Control Center (PDNCC). The PVC is dedicated to the CNM feature but does not affect the total number of per port PVCs available to the customer. ACS network locations where CNM is available are designated in the National Exchange Carrier Association, Inc. Tariff F.C.C. No. 4. (S-y) (S-y)

(y) Reissued matter filed under Transmittal No. 28, to become effective December 6, 2000.

8. ADVANCED COMMUNICATIONS NETWORKS

8.3 FRAME RELAY SERVICE (S-y)

8.3.1 GENERAL

B.12. (Cont'd) (S-y)
(D-y)

b. Priority PVC (T-y)

Grandfathered Priority PVC assigns a higher transit priority to the customer's designated UNIT PVCs. During intermittent network congestion, frames with priority PVC will move ahead of the non-priority PVCs. This minimizes delay and lowers the probability for frame discards. (C-y) (S-y)

The Priority PVC Optional Feature is not available for 2-Wire 128 kbps Frame Relay Service. (S-y)

(y) Reissued matter filed under Transmittal No. 28, to become effective December 6, 2000.

8. ADVANCED COMMUNICATIONS NETWORKS

8.3 FRAME RELAY SERVICE (S-y)

8.3.1 GENERAL

B.12. (Cont'd) (S-y)

c. Fault Tolerant Service (T-y)

Grandfathered Fault Tolerant Service reroutes the customer's PVCs in the event of a service interruption at the customer's primary location. Upon notification by the customer that a service interruption has occurred, the PVCs will be rerouted to a backup UNIT. Upon notification by the customer that the service has been restored, the Company will reroute the customer's PVCs back to the primary service. Fault Tolerant Service can be used to backup one or more primary location, however, only one activation can occur at a time. The backup UNIT speed must be equal to or greater than the highest UNIT speed of the designated primary connection. Fault Tolerant Service is only available on speeds of 56/64 kbps, 1.544 Mbps, and/or 44.736 Mbps. (C-y) (S-y)

Fault Tolerant Service will be activated within 30 minutes of notification by the appropriate customer representative. If the service is not switched from the designated primary to the backup within that allotted time frame, the customer will pay one half of the normal activation fee for Fault Tolerant Service. (S-y)

(D-y)

(y) Reissued matter filed under Transmittal No. 28, to become effective December 6, 2000.

8. ADVANCED COMMUNICATIONS NETWORKS

8.3 FRAME RELAY SERVICE (T)(M)
8.3.1 GENERAL (Cont'd)

C. Service Configuration (T)

The following diagram is an example of a typical Frame Relay Service User-To-Network Interface (UNI) or Network-to-Network Interface (NNI) configuration.

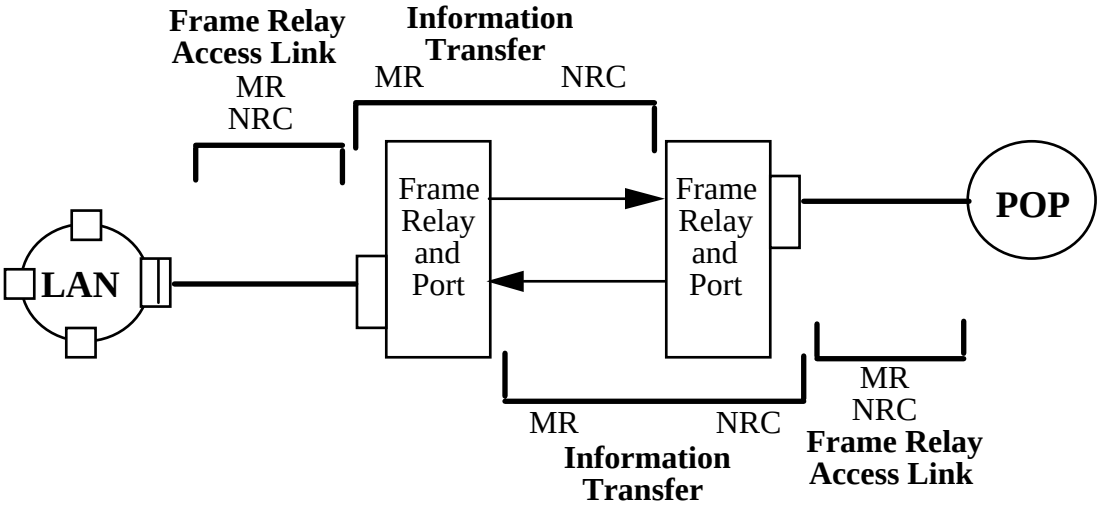

MR - Monthly Rate
NRC - Nonrecurring Charge

(M)

(D)

Certain material on this page formerly appeared on Page 8-21.
Certain material previously found on this page can now be found on Page 8-20.

8. ADVANCED COMMUNICATIONS NETWORKS

8.3 FRAME RELAY SERVICE (Cont'd)

8.3.2 REGULATIONS

A. General

1. A customer may access Frame Relay Service via an FRS Access Link, or, in lieu of the FRS Access Link, a Private Line Transport 56 or 64 kbps interface or any 1.544 Mbps interface in Section 7, 17 and/or Section 15, or an EICT DDS or EICT 1.544 Mbps or ITP 1.544 Mbps in Section 21. Regulations, rates and charges for Section 7 and/or 17 Channel Terminations, Transport Channels and Optional Features and Functions shall apply in addition to the regulations, rates and charges associated with the FRS. A customer utilizing Section 7 and/or 17 Private Line Transport Service Channel Termination or a EICT DDS, EICT 1.544 Mbps or ITP 1.544 Mbps from Section 21, in lieu of the FRS Access Link, would not incur the nonrecurring charge or monthly rate for a FRS Access Link, but would incur all other monthly rates and nonrecurring charges normally associated with the ordering, installing and provisioning of FRS, e.g., Information Transfer as set forth in this section. (C) (C) (C)

2. A subsequent PVC order is required when a customer chooses to add PVC(s), change PVC assignments or change the CIR on an existing PVC after the initial port installation. One nonrecurring subsequent PVC order charge applies in addition to the nonrecurring charge for each subsequent PVC(s) ordered. When more than one PVC is ordered or changed on the same customer service configuration at the same time, only one subsequent order charge applies.

3. An FRS Access Link is available as a component of FRS or as a Stand-Alone Access Link offering which connects customer-premises facilities to frame relay service networks provided by service providers other than the Company. When a Stand-Alone Access Link is ordered, Transport Channel mileage may apply, as applicable, at rates set forth in Section 7 or 17. (C)

8. ADVANCED COMMUNICATIONS NETWORKS

Certain material previously found on this page can now be found on Page 8-23.

8. ADVANCED COMMUNICATIONS NETWORKS

8.3 FRAME RELAY SERVICE (T)(M)
8.3.2 REGULATIONS (Cont'd)

B. Obligations of the Customer (T)

In addition to the Obligations of the Customer in Section 2, the following regulations apply. Error correction is the responsibility of the customer's Frame Relay-compatible terminal equipment. FRS switches may discard frames with errors. They may also discard frames when the network supporting FRS is in a state of congestion. Congestion control and recovery mechanisms are as set forth in technical documents listed under "Reference to Technical Publications" in Section 0, preceding. (M)

Certain material on this page formerly appeared on Page 8-22.
Certain material previously found on this page can now be found on Page 8-304.

8. ADVANCED COMMUNICATIONS NETWORKS

8.3 FRAME RELAY SERVICE (Cont'd)

8.3.3 RATE ELEMENTS

A. Access Link

A nonrecurring charge and monthly rate, based on the speed of the Access Link (i.e., 56 or 64 kbps, 2-Wire 128 kbps, or 1.544 Mbps), apply per Access Link for each physical connection to the network supporting FRS.

In lieu of an FRS Access Link, a Private Line Transport DS3 Service Channel Termination (CT) with Clear Channel Capability, as set forth in Section 7 or 17 (C)
depending upon the Pricing Flexibility relief in the customer's wire center, is used (C)
to provide access to a 44.736 Mbps Information Transfer. The DS3 Service CT provides access to the ACS Frame Relay Network switch via a connection between customer facilities at the network interface and an Information Transfer. FRS switch locations are designated by the Company and are identified in the National Exchange Carrier Association, Inc. Tariff F.C.C. No. 4.

B. Stand-Alone Access Link

A nonrecurring charge and a monthly rate, based on the speed of the Stand-Alone Access Link, apply per Stand-Alone Access Link for the physical connection between a customer's facilities and a frame relay service network provided by a service provider other than the Company. In addition to this rate element, PLTS Transport Channel mileage may apply, at the rates set forth in Section 7 or 17.

8. ADVANCED COMMUNICATIONS NETWORKS

8.3 FRAME RELAY SERVICE
8.3.3 RATE ELEMENTS (Cont'd)

C. Information Transfer (UNIT or NNIT)

A monthly rate, based on the speed of the port and the number of PVCs assigned to the port, applies per port for each FRS Access Link or digital private line connection to the network supporting FRS. A "First PVC" nonrecurring charge applies for the first unidirectional PVC ordered on an FRS Port. An "Each Additional PVC" nonrecurring charge applies for each additional unidirectional PVC ordered on the same FRS Port as the first PVC. For subsequent installations (order request after initial installations), a subsequent nonrecurring order charge applies, in addition to the "Each Additional PVC" nonrecurring charge, when PVCs are added, PVC assignments are changed, or CIR is changed on an existing PVC. In addition, private line transport charges may apply for NNIT, as set forth in Section 7 or 17 of this Tariff. (C)

D. Transport Channel

The Transport Channel rate element provides for the transmission facilities between the serving wire center associated with the customer-designated premises and a FRS Service Point or an FRS Switch; or between an EICT or ITP and a FRS Service Point. The Transport Channel is portrayed in mileage bands. Two rates apply for each band -- a flat rate per band and a rate per mile. The sum of the two rates constitutes the Transport Channel rate element. The rates, set forth in Section 7 or 17, apply according to the speed of the Access Link (i.e., 56 kbps, 64 kbps, or 1.544 Mbps) or the speed of the Channel Termination (i.e., 56 kbps, 64 kbps, 1.544 Mbps, or 44.736 Mbps). (C)

8. ADVANCED COMMUNICATIONS NETWORKS

8.3 FRAME RELAY SERVICE (S-y)
8.3.3 RATE ELEMENTS (Cont'd)

E. Central Office Connecting Channel (COCC)

A nonrecurring charge and a monthly rate apply per COCC connection between a multiplexer and a FRS Port or between a Company facility port and a FRS Port when used for port-to-port connectivity.

F. Optional Features and Functions (S-y)
(D-y)

1. Customer Network Management (T-y)

A monthly rate and a nonrecurring charge apply per customer-provided network management terminal equipment (workstation) designated to access the CNM optional feature. The customer must provide the Company with a registered address for each customer-provided workstation designated to access CNM. A nonrecurring charge applies for the initial setup of each workstation registered address designated to access CNM. A subsequent nonrecurring charge applies to change a workstation registered address in the CNM or to add CNM to existing FRS. When CNM is added to existing FRS, the subsequent nonrecurring charge applies, in addition to the initial setup nonrecurring charge. (S-y)

(D-y)

(y) Reissued matter filed under Transmittal No. 28, to become effective December 6, 2000.

8. ADVANCED COMMUNICATIONS NETWORKS

8.3 FRAME RELAY SERVICE (S-y)

8.3.3 RATE ELEMENTS

F. Optional Features and Functions (Cont'd) (S-y)

2. Priority PVC (Grandfathered) (C-y)

A nonrecurring charge applies per UNIT PVC to establish priority designation and is in addition to the rates and charges for the UNIT PVCs with which priority is associated. A monthly rate, based on the speed of the UNIT, applies per Unit Priority PVC. (S-y) (S-y)

3. Fault Tolerant Service (Grandfathered) (C-y)

A Frame Relay UNIT Initial Service Establishment nonrecurring charge applies to establish Fault Tolerant Service. The UNIT speed must be equal to or greater than the highest UNIT speed of the designated primary connection (e.g., if the interuption occurs on a 1.544 Mbps UNIT, the backup UNIT must be 1.544 Mbps or greater). A Subsequent Service Establishment nonrecurring charge applies to add primary site(s) to a previously established Fault Tolerant backup. In addition, the Fault Tolerant Service UNIT monthly rate for a 56/64 kbps, 1.544 Mbps or 44.736 Mbps UNIT with 0 PVCs applies. A customer must also purchase access to the Frame Relay UNIT (e.g., an Access Link). When a customer request is received to activate the Fault Tolerant Service to reroute the customer's primary PVCs to the backup, then subsequently restore the service to the primary PVCs, one Activation and Restoral nonrecurring charge also applies. (S-y) (S-y)

(D-y)

(y) Reissued matter filed under Transmittal No. 28, to become effective December 6, 2000.

(Filed under Transmittal 30.)

8. ADVANCED COMMUNICATIONS NETWORKS

8.3 FRAME RELAY SERVICE (T)

8.3.4 PRICING PLANS

A. General

FRS has two optional Pricing Plans: Fixed Period Service Rate Plan and Rate Stability Plan. The optional rate plans allow the FRS customer the assurance of no Company-initiated increases in rates during the fixed period.

In addition to the optional Pricing Plans the Company offers a nonrecurring charge (NRC) waiver to customers who subscribe to large volumes of FRS within the Qwest Corporation's 14 state region. The terms and conditions for this waiver are as set forth in 3, following. (N) (N)

1. Rate Stability Plan

FRS existing customers may have stabilized rates for fixed periods of 12 months, 24 months, 36 months, 48 months, 60 months, 72 months or 84 months at the rates listed in 8.4.2.A.

As of May 29, 1995, the Rate Stability Plan is no longer available for new subscribers. Existing RSP subscribers may retain RSP until the expiration of the existing term or until the customer disconnects the service. In this situation, a move to a different building does not constitute a disconnect of service.

2. Fixed Period Service Rate Plan

The FRS customer (except 2-Wire 128 kbps) may order this plan for 12 months, 24 months, 36 months, 48 months, 60 months, 72 months, or 84 months at the rates set forth in 8.3.5. Prior to the Grandfather date of December 26, 2000, the 2-Wire 128 kbps FRS customer could order this plan for 12 months, 36 months, or 60 months at the rates set forth in 8.3.5.

3. Volume Nonrecurring Charge (NRC) Waiver (N)

FRS customers who have 500 or more activated Frame Relay Access Links on a Fixed Period Service Rate Plan of 36 months or greater are eligible for the Volume NRC Waiver. This waiver will only be applicable to the nonrecurring charges associated with the 1.544 Mbps Access Link and the User-To-Network Information Transfer (UNIT) PVC charges associated with 1.544 Mbps and 44.736 Mbps as set forth in 8.3.5, following. (N)

8. ADVANCED COMMUNICATIONS NETWORKS

8.3 FRAME RELAY SERVICE (T)(M)
8.3.4 PRICING PLANS (Cont'd)

B. Terms and Conditions

1. Monthly rates for the entire fixed period will be frozen from Company-initiated increases, at the rates in effect for the fixed period on the service date. (T)

2. The customer must specify the length of the fixed period at the time the service is ordered. (T)

3. FRS rate elements may be ordered under monthly or any optional rate plan. For example, the customer may order the Access Link under the 36-month fixed period service rate plan and the Information Transfer under the 60-month fixed period service rate plan. (T) (T)

4. Customers with fixed period service established prior to September 1, 1998 receive rate decreases occurring during that fixed period. The reduced rates are automatically applied to the remaining term of the fixed period. (T)

5. Effective September 1, 1998, customers establishing a Fixed Period Rate Plan, will not receive a rate decrease if the Company decreases rates during the term of the plan. Fixed Period Rate Plans established on or before August 31, 1998, will automatically receive a rate decrease if the Company decreases rates during the term of the plan. (T) (M)

Certain material on this page formerly appeared on Page 8-71.
Certain material previously found on this page can now be found on Page 8-28.

8. ADVANCED COMMUNICATIONS NETWORKS

8.3 FRAME RELAY SERVICE (T)(M)
8.3.4 PRICING PLANS

B. Terms and Conditions (Cont'd)

6. At the end of the fixed period, the customer may select a new fixed period, convert to monthly rates or terminate the service. The rates will be those in effect (T) at the time the new fixed period begins. Should the customer fail to make a choice by the end of a fixed period, the service will automatically revert to the effective monthly (month-to-month) rates. If service is continued under the (T) pricing plans, nonrecurring charges will not apply.

7. The minimum service period for Rate Stability Plan is 3 months. The minimum (T) service period for Fixed Period Service Rate Plan is 6 months. When PVCs are added to an existing FRS, the minimum service period for the added PVCs is 1 (T) month. PVCs may be added to an existing fixed period on a month-to-month basis or under the same optional rate plan as the existing FRS but at the rates and charges in effect at the time of the addition, except when the PVCs are installed during the first 24 months of the customer's Pricing Plan as set forth in the Phased-In Installation Rates and Charges Regulations, following. (M)

Certain material on this page formerly appeared on Page 8-71.
Certain material previously found on this page can now be found on Page 8-29.

8. ADVANCED COMMUNICATIONS NETWORKS

8.3 FRAME RELAY SERVICE
8.3.4 PRICING PLANS

B. Terms and Conditions (Cont'd)

8. Phased-In Installation Rates and Charges Regulations (M)

For Pricing Plans in effective as of November 14, 1994, and for each individual customer's FRS ordered under a Pricing Plan since that date, the recurring rates and nonrecurring charges for rate elements installed or moved to a new building during the first 24 months of the customer's Pricing Plan, or 12 months for customer's who subscribe to the 12-month Plan, will be those rates in effect as of the installation date of the first rate element (unless a decrease in rates has occurred, in which case the lower rates will apply).

After the first 24 months of the Pricing Plan, or 12 months for customer's who subscribe to the 12-month Plan, FRS Access Links and Optional Features and Functions may be moved or added to an existing Pricing Plan using the original Pricing Plan establishment date; however, the rates and charges will be those in effect at the time of the move or addition. If the remaining number of months for the existing term is less than either 3 months for an FRS Rate Stability Plan, or 6 months for an FRS Fixed Period Service Rate Plan, then the new service can be added as month-to-month until the expiration of the existing term or the new service can be added to the original Pricing Plan but the minimum period will be the minimum period designated by the type of Pricing Plan. (M)

Certain material on this page formerly appeared on Page 8-94.

8. ADVANCED COMMUNICATIONS NETWORKS

8.3 FRAME RELAY SERVICE
8.3.4 PRICING PLANS

B. Terms and Conditions (Cont'd)

9. Frame Relay Service (FRS) Renewal Discount Plan for Fixed Period Rate Plans (N)

FRS customers with an existing Fixed Period Rate Plan (Pricing Plan) which has expired or is within 3 months of the expiration date may subscribe to a new 12-Month or greater Pricing Plan and receive a discount on selected rate elements from the current Fixed Period Rate Plan monthly rates and at a reduced TLA%. The Termination Liability and Wavier Policy as set forth in 8.1.5, preceding, will not apply to the existing rate plan that is being renewed.

The new discounted 12-Month or greater Fixed Period Rate Plan will be rated at the current tariff rates for the selected Pricing Plan less the applicable renewal discount as set forth below. The discount will only be applied to Pricing Plan recurring rates for selected rate elements and will not be applied to nonrecurring rates or rate elements on month-to-month. A new minimum service period does not apply to these renewals, however the Termination Liability and Wavier Policy as set forth in 8.1.5, preceding, will apply to the new Pricing Plan but with a 15% TLA in lieu of 25%.

This FRS Service Renewal Discount Plan is only available where facilities exist.

Discounted Rate Elements	**Discount** %
• Network-To-Network Information Transfer (NNIT):	
- 56 kbps up to 1.544 Mbps	5%
- 44.736 Mbps	10%
• User-To-Network Information Transfer (UNIT):	
- 56 kbps up to 1.544 Mbps	5%
- 44.736 Mbps	10%
• Central Office Connecting Channel COCC):	
- 56 kbps up to 1.544 Mbps	5%
- 44.736 Mbps	10% (N)

8. ADVANCED COMMUNICATIONS NETWORKS

Certain material previously found on this page can now be found on Page 8-32.

8. ADVANCED COMMUNICATIONS NETWORKS

(D)

Certain material previously found on this page can now be found on Page 8-93.1.

8. ADVANCED COMMUNICATIONS NETWORKS

8.3 FRAME RELAY SERVICE (T)(M)
8.3.4 PRICING PLANS (Cont'd)

C. Changes in Rate Plans (T)

Services rated under the month-to-month plan or an existing fixed period service rate plan may be upgraded to a new fixed period service rate plan at any time the customer chooses without incurring nonrecurring charges, Discontinuance Charges or Termination Liability charges. This upgrade will be allowed provided the channel interface and the customer-designated premises remain the same. (T) Additionally, the new fixed period service rate plan must meet or exceed the fixed period service rate plan being upgraded.

The monthly rates will be those in effect at the time the new fixed period begins. New minimum service periods apply to upgrades in rate plan.

If a customer chooses to change an existing service provided under a fixed period service rate plan or a rate stability plan to a month-to-month plan, the change will be treated as a discontinuance of the existing service and an establishment of new service. Appropriate Discontinuance Charges, as set forth in E., following, or (T) Termination Liability as set forth in 8.1.5, and a new minimum period will apply (T) in addition to the new monthly rates for the service.

D. Changes in Transmission Speed (T)

1. Customers with the FRS Pricing Plan in service prior to May 29, 1995, may utilize Termination Liability and Waiver Policy as set forth in 8.1.5, in lieu of (T) Changes in Transmission Speed. This offer is valid until either the expiration date of their existing term or until May 29, 1996 for a 12-month term, May 29, (T) 1997 for a 24-month term, May 29, 1998 for a 36-month term, May 29, 2000 for a 60-month term, May 29, 2001 for a 72-month term and May 29, 2002 for a 84-month term, whichever comes first. After May 29, 1995 Termination Liability (T) and Waiver Policy will be in effect for all new customers subscribing to the FRS Pricing Plan. (M)

Certain material on this page formerly appeared on Page 8-73.
Certain material previously found on this page can now be found on Page 8-338.

8. ADVANCED COMMUNICATIONS NETWORKS

8.3 FRAME RELAY SERVICE (T)(M)
8.3.4 PRICING PLANS

D. Changes in Transmission Speed (Cont'd)

2. Should the customer choose to change the service provided under a fixed period service rate plan or a rate stability plan to an equal or greater transmission speed FRS or other Company service (e.g., 56 kbps FRS to 56 kbps Digital Data Service, 56 or 64 kbps FRS to 64 kbps Digital Data Service or to 1.544 Mbps FRS or DS1 Service), discontinuance charges will not apply, provided all the following conditions are met: (T)

   - Both the existing service and the new service are provided solely by the Company, (T)
   - The customer's request for disconnect of the existing service and the request for new connect of the new service are received at the same time,
   - The new service is provided between the same customer locations as the discontinued service, except as set forth in F., following, (T)
   - The new fixed period meets or exceeds the remaining length of the existing fixed period being discontinued[1], and
   - The total monthly rate of the new service is equal to or greater than the total monthly rate of the existing service.

3. All changes in transmission speed are subject to the availability of service. The monthly rates for the new service and/or service elements will be those rates in effect at the time the service is changed. Related nonrecurring charges apply for the change and are the charges in effect at the time the service is changed. (T)

4. Should the order to change transmission speed exclude one or more of the conditions above, it will be treated as a discontinuance of the existing service and the establishment of a new service. All outstanding minimum period charges and discontinuance charges, as set forth in E., following, will apply. (T) (T)

[1] On the effective date of this Tariff, RSP subscribers must change to a fixed period service rate plan, which meets or exceeds the remaining length of the existing RSP being discontinued. (T) (M)

Certain material on this page formerly appeared on Page 8-73 and 8-74.
Certain material previously found on this page can now be found on Page 8-339.

8. ADVANCED COMMUNICATIONS NETWORKS

8.3 FRAME RELAY SERVICE (T)(M)
8.3.4 PRICING PLANS (Cont'd)

E. Discontinuance of Service

Discontinuance charges apply if the customer chooses to discontinue all or a portion of the service, equaling more than 20% of the total monthly rate, prior to the expiration of the fixed period service. A minimum billing level of 80% of the (T) total monthly rates will be used to calculate discontinuance charges. The minimum billing level is based on the monthly rate as of the service established date, plus any additions to the service after the service established date.

Customers with the FRS Pricing Plan in service prior to May 29, 1995 may utilize (T) Termination Liability and Waiver Policy as set forth in 8.1.5, in lieu of Discontinuance Charges in 1., following. This offer is valid until either the expiration date of their existing term or until May 29, 1996 for a 12-month term, May 29, 1997 for a 24-month term, May 29, 1998 for a 36-month term, May 29, 1999 for a 48-month term, May 29, 2000 for a 60-month term, May 29, 2001 for a 72-month term and May 29, 2002 for a 84-month term, whichever comes first. After May 29, 1995, Termination Liability and Waiver Policy will be in effect for (T) all new customers subscribing to the FRS Pricing Plan. (M)

Certain material on this page formerly appeared on Page 8-75.
Certain material previously found on this page can now be found on Page 8-33.

8. ADVANCED COMMUNICATIONS NETWORKS

8.3 FRAME RELAY SERVICE (T)(M)

8.3.4 PRICING PLANS

E. Discontinuance of Service (Cont'd)

1. Rate Stability Plan

After May 29, 1995, the Rate Stability Plan is no longer available for new subscribers. (T)

Should the customer choose to discontinue service provided under the rate stability plan prior to the completion of the minimum service period of 3 months, a discontinuance charge will apply. The discontinuance charge is 80% (minimum billing level) of the total monthly rates for the remaining months of the minimum service period, plus 10% of the minimum billing level for the remaining term of the fixed period. (T)

Should the customer choose to discontinue the rate stability plan after the minimum service period but before the completion of the fixed period, a discontinuance charge equal to 10% of the minimum billing level for the remaining term of the fixed period will apply. For example, if a customer chooses to discontinue service after 33 months of a 60-month fixed period, the discontinuance charge will be .10 multiplied by 27 months, multiplied by the minimum billing level. (T) (M)

Certain material on this page formerly appeared on Page 8-75.
Certain material previously found on this page can now be found on Page 8-34.

8. ADVANCED COMMUNICATIONS NETWORKS

8.3 FRAME RELAY SERVICE (T)(M)
8.3.4 PRICING PLANS

E.1. (Cont'd) (T)

If, by discontinuing a portion of the service provided under a rate stability plan, a customer's total monthly billing level falls below the minimum billing level, which shall include any additions to the service, a discontinuance charge, as set forth preceding, will apply only to the portion of the service being discontinued.

2. Fixed Period Service Rate Plan (T)

Should the customer choose to discontinue fixed period service rate plan prior to the completion of the minimum service period of 6 months, discontinuance charges will apply. The discontinuance charge is 80% (minimum billing level) of the total monthly rates for the remaining months of the minimum service period, plus 40% of the minimum billing level for the remaining portion of the fixed period service. (T)

Should the customer choose to discontinue fixed period service rate plan after the minimum service period but before the completion of the fixed period, discontinuance charges will apply. Discontinuance charges equal to 40% of the minimum billing level for the remaining portion of the fixed period service will apply. For example, if a customer chooses to discontinue service after 33 months of a 60-month fixed period, the discontinuance charges would be 0.40 multiplied by 27 months, multiplied by the minimum billing level. (T)

If, by discontinuing a portion of the service provided under a fixed period service rate plan, a customer's total monthly billing level falls below the minimum billing level, which shall include any additions to the service, a discontinuance charge, as set forth preceding, will apply only to the portion of the service being discontinued. (M)

Certain material on this page formerly appeared on Page 8-76.
Certain material previously found on this page can now be found on Pages 8-35 and 8-36.

8. ADVANCED COMMUNICATIONS NETWORKS

8.3 FRAME RELAY SERVICE (T)(M)
8.3.4 PRICING PLANS
E.2. (Cont'd) (T)

If a customer chooses to change an existing service offered under a fixed period service rate plan to a rate stability plan or to a month-to-month plan, the change will be treated as a discontinuance of the existing service and an establishment of new service. Appropriate discontinuance charges, a new minimum period and (T)
related nonrecurring charges for establishment of the new service will apply in (T)
addition to the new monthly rates for the service.

3. Discontinuance charges do not apply to fixed period services purchased by local, (T)
State or Federal government entities, or to customers who have purchased
services solely for resale to local, State or Federal government entities, when they (T)
are discontinued prior to the completion of the fixed period service only when all of the following conditions are met:

- The service(s) purchased by the local, State or Federal government entity or by customers that have purchased services for resale to local, State or Federal government entities are utilized solely for provision of services for that local, State or Federal government entity,

- Funding for the fixed period service ordered by the authorized local, State or Federal government entity is included in the budget request for each fiscal period appropriation sufficient to cover the authorized local, State or Federal government entity's obligations under the fixed period service for that fiscal period,

- Nonappropriation may not be used as a means of terminating the service to acquire a functionally similar product or service, (M)

Certain material on this page formerly appeared on Page 8-77.
Certain material previously found on this page can now be found on Page 8-433.

8. ADVANCED COMMUNICATIONS NETWORKS

8.3 FRAME RELAY SERVICE (T)(M)
8.3.4 PRICING PLANS
E.3. (Cont'd) (T)

- The local, State or Federal government entity ordered the fixed period service under the good faith belief that moneys in amounts sufficient to discharge its obligations could and would lawfully be appropriated and be made available for this purpose and,

- The local, State or Federal government entity or the customer who ordered the service on their behalf, must provide the Company notarized documents agreed upon by both the Company and the customer, showing that the entity is allotted insufficient funds for the remainder of the then current fiscal period (or for a succeeding fiscal period) by appropriation, appropriation limitation or grant to continue payments under the fixed period service and has no other funding source lawfully available to it for such purpose. The fixed period service may be terminated by giving the Company not less than 30 days written notice. (T) Should the customer receive funding for the cancelled service prior to physical (T) disconnect of service, the customer may cancel the disconnect order per Section 5. Upon termination, the local, State or Federal government entity or (T) the customer who ordered the service on their behalf, shall pay all applicable rates and nonrecurring charges of the fixed period service incurred through the date of termination and through the end of the then current fiscal period to the extent of lawfully available funds. (M)

Certain material on this page formerly appeared on Page 8-78.
Certain material previously found on this page can now be found on Page 8-37.

8. ADVANCED COMMUNICATIONS NETWORKS

8.3 FRAME RELAY SERVICE (T)(M)
8.3.4 PRICING PLANS (Cont'd)

F. Moves to a Different Building Utilizing Portability (T)

Portability allows FRS ordered under a Pricing Plan to move to a different building without incurring discontinuance charges or establishing new minimum service periods. Applicable nonrecurring charges apply to move the service.

1. Portability without upgrade in transmission speed (T)

A customer with existing FRS may choose to move either a portion of or the entire existing service or move and change their FRS to another Company service without incurring discontinuance charges provided the following conditions are met:

- Both the existing and the new service are provided solely by the Company,
- The new service has a speed equal to the speed of the disconnected service,
- The customer's request for both the disconnect order for the existing service and the new connect order for the new service are received at the same time and must specifically reference the application of Portability,
- The customer's request for the disconnect order for the existing service must reference the new connect order, and
- The due date of the new connect order must be within 30 days of the due date of the disconnect order. (M)

Certain material on this page formerly appeared on Page 8-79.

8. ADVANCED COMMUNICATIONS NETWORKS

8.3 FRAME RELAY SERVICE (T)(M)
8.3.4 PRICING PLANS (T)

F.1. (Cont'd)

The monthly rates for the new service will be those rates in effect at the time the service is installed at the new location. All nonrecurring charges apply for the new service. Should changes to either the disconnect order or the new connect order for Portability exclude one or more of the conditions above, applicable discontinuance charges will be assessed. The rates, charges and regulations for changes from FRS to other Company services are as specified in other sections of this Tariff.

For FRS provided under VTPP, the existing term or fixed period may be utilized for the FRS at the new location, provided the remaining number of months of the existing term is at least the minimum period of the VTPP (i.e., three months for an FRS Rate Stability Plan, or six months for an FRS Fixed Period Service Rate Plan). If the remaining number of months for the existing term is less than the associated minimum period, then the remaining number of months for the existing term at the new location shall be extended to either three months for an FRS Rate Stability Plan, or six months for an FRS Fixed Period Service Rate Plan. (M)

Certain material on this page formerly appeared on Page 8-80.
Certain material previously found on this page can now be found on Page 8-5.

8. ADVANCED COMMUNICATIONS NETWORKS

8.3 FRAME RELAY SERVICE (T)(M)

8.3.4 PRICING PLANS

F. Moves to a Different Building Utilizing Portability (Cont'd)

2. Portability with upgrade in transmission speed

Customers with FRS Pricing Plans in service prior to May 29, 1995, may utilize Portability with upgrade in transmission speed until the end of their existing term, (T)
or may utilize the Termination Liability and Waiver Policy as set forth in 8.1.5, (T)
following. At the expiration of their existing Pricing Plan, the Termination Liability and Waiver Policy must be utilized for moves to a different building with an upgrade in transmission speed.

A customer with existing FRS may choose to move the existing service and upgrade to another higher speed FRS or to another higher speed service provided by the Company without incurring discontinuance charges provided the following conditions are met:

- Both the existing and the new services are provided solely by the Company,
- The customer's request for the disconnect order for the existing service and the new connect order for the new service are received at the same time and must specifically reference the application of Portability and upgrade in capacity,
- The customer's request for the disconnect order for the existing service must reference the new connect order, and
- The due date of the new connect order must be within 30 days of the due date of the disconnect order. (M)

Certain material on this page formerly appeared on Pages 8-80 and 8-81.
Certain material previously found on this page can now be found on Page 8-6.

8. ADVANCED COMMUNICATIONS NETWORKS

8.3 FRAME RELAY SERVICE (T)(M)
8.3.4 PRICING PLANS
F.2. (Cont'd) (T)

For FRS provided under Pricing Plans, the term or fixed period for the existing FRS may continue to be the same term for the FRS at the new location, provided the remaining number of months of the existing plan is at least the minimum period of the existing Pricing Plan (i.e., three months for an FRS Rate Stability Plan, or six months for an FRS Fixed Period Service Rate Plan). If the remaining number of months for the existing Pricing Plan is less than the associated minimum period, then the minimum period for the new service shall be three months for an FRS Rate Stability Plan, or six months for an FRS Fixed Period Service Rate Plan. (T)

The monthly rates for the new service will be those rates in effect at the time the new upgraded service is installed. Should changes to either the disconnect order or the new connect order for Portability exclude one or more of the conditions above, applicable discontinuance charges will be assessed. The rates, charges and regulations for changes from FRS to other Company services are as specified in other sections of this Tariff. (M)

Certain material on this page formerly appeared on Page 8-81.
Certain material previously found on this page can now be found on Pages 8-7 and 8-8.

8. ADVANCED COMMUNICATIONS NETWORKS

8.3 FRAME RELAY SERVICE (Cont'd)

8.3.5 RATES AND CHARGES

A. Monthly

Regulations for the Grandfathered services are set forth in 8.3.1.A.

	USOC	NONRECURRING CHARGE	MONTHLY RATE
1. Access Link, per Access Link			
• 56 or 64 kbps	L7AXM	$450.00	$ 72.25 (I)
• 2-Wire 128 kbps	L7TAM	450.00	45.00
• 1.544 Mbps	L7AXM	450.00	126.50
2. Stand-Alone Access Link, per Access Link			
• 56 or 64 kbps	NNLXM	450.00	72.25 (I)
• 1.544 Mbps	NNLXM	450.00	126.50

3. User-To-Network Information Transfer (UNIT)

	USOC	NONRECURRING CHARGE
• 56 or 64 kbps		
- First PVC	NRBF1	$50.00
- Each additional PVC	NRBF2	20.00
- Subsequent PVC(s) order charge, per order[1]	NRBFO	75.00

[1] When appropriate, the "Each additional PVC" nonrecurring charge applies in addition to the "Subsequent PVC order charge".

8. ADVANCED COMMUNICATIONS NETWORKS

8.3 FRAME RELAY SERVICE (S-y)

8.3.5 RATES AND CHARGES

A. Monthly

3. User-To-Network Information Transfer (UNIT) (Cont'd)

	USOC	NONRECURRING CHARGE	
• 2-Wire 128 kbps (Grandfathered)			(C-y)
- First PVC	NRBF7	$300.00	(S-y)
- Each additional PVC	NRBF8	20.00	
- Subsequent PVC(s) order charge, per order[1]	NRBF9	75.00	
• 112 or 128 kbps (4-Wire), 224 or 256 kbps, 336 or 384 kbps, 448 or 512 kbps, and 672 or 768 kbps			
- First PVC	NRBF1	250.00	
- Each additional PVC	NRBF2	20.00	
- Subsequent PVC(s) order charge, per order[1]	NRBFO	75.00	
• 1.544 Mbps			
- First PVC	NRBF1	50.00	
- Each additional PVC	NRBF2	20.00	
- Subsequent PVC(s) order charge, per order[1]	NRBFO	75.00	

[1] When appropriate, the "Each additional PVC" nonrecurring charge applies in addition to the "Subsequent PVC order charge". (S-y)

(y) Reissued matter filed under Transmittal No. 28, to become effective December 6, 2000.

(Filed under Transmittal 30.)

8. ADVANCED COMMUNICATIONS NETWORKS

8.3 FRAME RELAY SERVICE (S-y)

8.3.5 RATES AND CHARGES

A. Monthly

3. User-To-Network Information Transfer (UNIT) (Cont'd)

	USOC	NONRECURRING CHARGE	
• 44.736 Mbps			
- First PVC	NRBF1	$250.00	
- Each additional PVC	NRBF2	50.00	
- Subsequent PVC(s) order charge, per order[1]	NRBFO	75.00	(S-y)
• Fault Tolerant Service (Grandfathered), per UNIT			(C-y) (S-y)
- Initial Service Establishment	NRBF4	500.00	
- Subsequent Service Establishment	NRBF5	50.00	
- Activation and Restoral	NRBF6	500.00	

[1] When appropriate, the "Each additional PVC" nonrecurring charge applies in addition to the "Subsequent PVC order charge". (S-y)

(y) Reissued matter filed under Transmittal No. 28, to become effective December 6, 2000.

(Filed under Transmittal 30.)

8. ADVANCED COMMUNICATIONS NETWORKS

8.3 FRAME RELAY SERVICE (T)(M)

8.3.5 RATES AND CHARGES

A. Monthly

3. User-To-Network Information Transfer (UNIT) (Cont'd) (T)

	USOC	MONTHLY RATE
• 56 or 64 kbps - UNIT, per Port		
- 0 PVCs, used with Fault Tolerant Service	17T9M	$ 35.00
- 1 PVC	17TAM	39.28
- 2 PVCs	17TBM	44.53
- 3 PVCs	17TCM	47.79
- 4 PVCs	17TDM	51.06
- 5 PVCs	17TEM	54.29
- 6 PVCs through 14[1], per PVC	17TGM	1.24
- 15 PVCs through 24[2], per PVC	17THM	0.27
- Each additional PVC over 24[3], per PVC	17TJM	0.25
• 2-Wire 128 kbps - UNIT, per Port		
- 1 PVC	18TBM	95.00
- 2 through 8 PVCs[4]	18TCM	8.30
• 112 or 128 kbps (4-Wire) - UNIT, per Port		
- 1 PVC	17TAM	120.00
- 2 PVCs	17TBM	123.00
- 3 PVCs	17TCM	126.00
- 4 PVCs	17TDM	129.00
- 5 PVCs	17TEM	132.00
- 6 PVCs through 14[1], per PVC	17TGM	1.20
- 15 PVCs through 24[2], per PVC	17THM	0.85
- Each additional PVC over 24[3], per PVC	17TJM	0.50

[1] For each PVC over 5, up to and including 14, add this rate to the monthly rate for 5 PVCs.
[2] For each PVC over 14, up to and including 24, add this rate to the total monthly rate for 14 PVCs.
[3] For each PVC over 24 add this rate to the total monthly rate for 24 PVCs.
[4] For each PVC over 1, up to and including 8, add this rate to the monthly rate for 1 PVCs. (M)

Certain material on this page formerly appeared on Page 8-129.
Certain material previously found on this page can now be found on Page 8-12.

8. ADVANCED COMMUNICATIONS NETWORKS

8.3 FRAME RELAY SERVICE (T)(M)

8.3.5 RATES AND CHARGES

A. Monthly

3. User-To-Network Information Transfer (UNIT) (Cont'd) (T)

	USOC	MONTHLY RATE
• 224 or 256 kbps - UNIT, per Port		
- 1 PVC	17TAM	$ 160.00
- 2 PVCs	17TBM	166.00
- 3 PVCs	17TCM	172.00
- 4 PVCs	17TDM	178.00
- 5 PVCs	17TEM	184.00
- 6 PVCs through 14[1], per PVC	17TGM	2.35
- 15 PVCs through 24[2], per PVC	17THM	1.65
- Each additional PVC over 24[3], per PVC	17TJM	0.50
• 336 or 384 kbps - UNIT, per Port		
- 1 PVC	17TAM	200.00
- 2 PVCs	17TBM	208.75
- 3 PVCs	17TCM	217.50
- 4 PVCs	17TDM	226.25
- 5 PVCs	17TEM	235.00
- 6 PVCs through 14[1], per PVC	17TGM	3.50
- 15 PVCs through 24[2], per PVC	17THM	2.50
- Each additional PVC over 24[3], per PVC	17TJM	0.50

[1] For each PVC over 5, up to and including 14, add this rate to the monthly rate for 5 PVCs.
[2] For each PVC over 14, up to and including 24, add this rate to the total monthly rate for 14 PVCs.
[3] For each PVC over 24 add this rate to the total monthly rate for 24 PVCs. (M)

Certain material on this page formerly appeared on Page 8-130.
Certain material previously found on this page can now be found on Page 8-13.

8. ADVANCED COMMUNICATIONS NETWORKS

8.3 FRAME RELAY SERVICE (T)(M)

8.3.5 RATES AND CHARGES

A. Monthly

3. User-To-Network Information Transfer (UNIT) (Cont'd) (T)

	USOC	MONTHLY RATE
• 448 or 512 kbps - UNIT, per Port		
- 1 PVC	17TAM	$235.00
- 2 PVCs	17TBM	244.50
- 3 PVCs	17TCM	254.00
- 4 PVCs	17TDM	263.50
- 5 PVCs	17TEM	273.00
- 6 PVCs through 14[1], per PVC	17TGM	3.75
- 15 PVCs through 24[2], per PVC	17THM	2.50
- Each additional PVC over 24[3], per PVC	17TJM	0.50
• 672 or 768 kbps - UNIT, per Port		
- 1 PVC	17TAM	310.00
- 2 PVCs	17TBM	324.00
- 3 PVCs	17TCM	338.00
- 4 PVCs	17TDM	352.00
- 5 PVCs	17TEM	366.00
- 6 PVCs through 14[1], per PVC	17TGM	4.00
- 15 PVCs through 24[2], per PVC	17THM	2.75
- Each additional PVC over 24[3], per PVC	17TJM	.85

[1] For each PVC over 5, up to and including 14, add this rate to the monthly rate for 5 PVCs.
[2] For each PVC over 14, up to and including 24, add this rate to the total monthly rate for 14 PVCs.
[3] For each PVC over 24 add this rate to the total monthly rate for 24 PVCs. (M)

Certain material on this page formerly appeared on Page 8-131.
Certain material previously found on this page can now be found on Page 8-14.

8. ADVANCED COMMUNICATIONS NETWORKS

8.3 FRAME RELAY SERVICE (T)(M)

8.3.5 RATES AND CHARGES

A. Monthly

3. User-To-Network Information Transfer (UNIT) (Cont'd) (T)

	USOC	MONTHLY RATE
• 1.544 Mbps - UNIT, per Port		
- 0 PVCs, used with Fault Tolerant Service	17T9M	$ 215.00
- 1 PVC	17TAM	240.00
- 2 PVCs	17TBM	277.00
- 3 PVCs	17TCM	314.00
- 4 PVCs	17TDM	351.00
- 5 PVCs	17TEM	388.00
- 6 PVCs through 14[1], per PVC	17TGM	19.00
- 15 PVCs through 24[2], per PVC	17THM	5.00
- Each additional PVC over 24[3], per PVC	17TJM	0.50
• 44.736 Mbps - UNIT, per Port		
- 0 PVCs, used with Fault Tolerant Service	17T9M	3,500.00
- 1 PVC	17TUM	3,800.00
- 2 PVCs through 50[4], per PVC	17TVM	30.00
- 51 PVCs through 140[5], per PVC	17TWM	8.00
- 141 PVCs through 240[6], per PVC	17TYM	4.00
- 241 PVCs through 500[7], per PVC	17TZM	2.00

[1] For each PVC over 5, up to and including 14, add this rate to the monthly rate for 5 PVCs.
[2] For each PVC over 14, up to and including 24, add this rate to the total monthly rate for 14 PVCs.
[3] For each PVC over 24 add this rate to the total monthly rate for 24 PVCs.
[4] For each PVC over 1, up to and including 50, add this rate to the monthly rate for 1 PVC.
[5] For each PVC over 50, up to and including 140, add this rate to the total monthly rate for 50 PVCs.
[6] For each PVC over 140, up to and including 240, add this rate to the total monthly rate for 140 PVCs.
[7] For each PVC over 240, up to and including 500, add this rate to the total monthly rate for 240 PVCs. (M)

Certain material on this page formerly appeared on Page 8-132.
Certain material previously found on this page can now be found on Page 8-15.

8. ADVANCED COMMUNICATIONS NETWORKS

8.3 FRAME RELAY SERVICE (T)(M)
8.3.5 RATES AND CHARGES
A. Monthly (Cont'd)

4. Network-To-Network Information Transfer (NNIT) (T)

	USOC	NONRECURRING CHARGE
• 56 or 64 kbps		
- First PVC	NRBF1	$ 50.00
- Each additional PVC	NRBF2	20.00
- Subsequent PVC(s) order charge, per order[1]	NRBFO	75.00
• 112 or 128 kbps, 224 or 256 kbps, 336 or 384 kbps, 448 or 512 kbps, and 672 or 768 kbps		
- First PVC	NRBF1	250.00
- Each additional PVC	NRBF2	20.00
- Subsequent PVC(s) order charge, per order[1]	NRBFO	75.00
• 1.544 Mbps		
- First PVC	NRBF1	50.00
- Each additional PVC	NRBF2	20.00
- Subsequent PVC(s) order charge, per order[1]	NRBFO	75.00

[1] When appropriate, the “Each additional PVC” nonrecurring charge applies in addition to the “Subsequent PVC order charge”. (M)

Certain material on this page formerly appeared on Page 8-133.
Certain material previously found on this page can now be found on Page 8-16.

8. ADVANCED COMMUNICATIONS NETWORKS

8.3 FRAME RELAY SERVICE (T)(M)
8.3.5 RATES AND CHARGES
A. Monthly
4. Network-To-Network Information Transfer (NNIT) (Cont'd) (T)

	USOC	NONRECURRING CHARGE
• 44.736 Mbps		
- First PVC	NRBF1	$250.00
- Each additional PVC	NRBF2	50.00
- Subsequent PVC(s) order charge, per order[1]	NRBFO	75.00

[1] When appropriate, the "Each additional PVC" nonrecurring charge applies in addition to the "Subsequent PVC order charge". (M)

Certain material on this page formerly appeared on Page 8-133.1.
Certain material previously found on this page can now be found on Page 8-17.

8. ADVANCED COMMUNICATIONS NETWORKS

8.3 FRAME RELAY SERVICE (T)(M)

8.3.5 RATES AND CHARGES

A. Monthly

4. Network-To-Network Information Transfer (NNIT) (Cont'd) (T)

	USOC	MONTHLY RATE
• 56 or 64 kbps - NNIT, per Port		
- 1 PVC	17TAM	$38.00
- 2 PVCs	17TBM	42.35
- 3 PVCs	17TCM	46.70
- 4 PVCs	17TDM	51.05
- 5 PVCs	17TEM	55.40
- 6 PVCs through 14[1], per PVC	17TGM	0.50
- 15 PVCs through 24[2], per PVC	17THM	0.30
- Each additional PVC over 24[3], per PVC	17TJM	0.25
• 112 or 128 kbps - NNIT, per Port		
- 1 PVC	17TAM	85.00
- 2 PVCs	17TBM	88.00
- 3 PVCs	17TCM	91.00
- 4 PVCs	17TDM	94.00
- 5 PVCs	17TEM	97.00
- 6 PVCs through 14[1], per PVC	17TGM	1.20
- 15 PVCs through 24[2], per PVC	17THM	0.85
- Each additional PVC over 24[3], per PVC	17TJM	0.50

[1] For each PVC over 5, up to and including 14, add this rate to the monthly rate for 5 PVCs.
[2] For each PVC over 14, up to and including 24, add this rate to the total monthly rate for 14 PVCs.
[3] For each PVC over 24 add this rate to the total monthly rate for 24 PVCs. (M)

Certain material on this page formerly appeared on Page 8-134.
Certain material previously found on this page can now be found on Page 8-61.

8. ADVANCED COMMUNICATIONS NETWORKS

8.3 FRAME RELAY SERVICE (T)(M)

8.3.5 RATES AND CHARGES

A. Monthly

4. Network-To-Network Information Transfer (NNIT) (Cont'd) (T)

	USOC	MONTHLY RATE
• 224 or 256 kbps - NNIT, per Port		
- 1 PVC	17TAM	$125.00
- 2 PVCs	17TBM	131.00
- 3 PVCs	17TCM	137.00
- 4 PVCs	17TDM	143.00
- 5 PVCs	17TEM	149.00
- 6 PVCs through 14[1], per PVC	17TGM	2.35
- 15 PVCs through 24[2], per PVC	17THM	1.65
- Each additional PVC over 24[3], per PVC	17TJM	0.50
• 336 or 384 kbps - NNIT, per Port		
- 1 PVC	17TAM	170.00
- 2 PVCs	17TBM	178.75
- 3 PVCs	17TCM	187.50
- 4 PVCs	17TDM	196.25
- 5 PVCs	17TEM	205.00
- 6 PVCs through 14[1], per PVC	17TGM	3.50
- 15 PVCs through 24[2], per PVC	17THM	2.50
- Each additional PVC over 24[3], per PVC	17TJM	0.50

[1] For each PVC over 5, up to and including 14, add this rate to the monthly rate for 5 PVCs.
[2] For each PVC over 14, up to and including 24, add this rate to the total monthly rate for 14 PVCs.
[3] For each PVC over 24 add this rate to the total monthly rate for 24 PVCs. (M)

Certain material on this page formerly appeared on Page 8-135.
Certain material previously found on this page can now be found on Page 8-62.

8. ADVANCED COMMUNICATIONS NETWORKS

8.3 FRAME RELAY SERVICE (T)(M)

8.3.5 RATES AND CHARGES

A. Monthly

4. Network-To-Network Information Transfer (NNIT) (Cont'd) (T)

	USOC	MONTHLY RATE
• 448 or 512 kbps - NNIT, per Port		
- 1 PVC	17TAM	$205.00
- 2 PVCs	17TBM	214.50
- 3 PVCs	17TCM	224.00
- 4 PVCs	17TDM	233.50
- 5 PVCs	17TEM	243.00
- 6 PVCs through 14[1], per PVC	17TGM	3.75
- 15 PVCs through 24[2], per PVC	17THM	2.50
- Each additional PVC over 24[3], per PVC	17TJM	0.50
• 672 or 768 kbps - NNIT, per Port		
- 1 PVC	17TAM	280.00
- 2 PVCs	17TBM	293.00
- 3 PVCs	17TCM	306.00
- 4 PVCs	17TDM	319.00
- 5 PVCs	17TEM	332.00
- 6 PVCs through 14[1], per PVC	17TGM	3.75
- 15 PVCs through 24[2], per PVC	17THM	2.50
- Each additional PVC over 24[3], per PVC	17TJM	0.50

[1] For each PVC over 5, up to and including 14, add this rate to the monthly rate for 5 PVCs.
[2] For each PVC over 14, up to and including 24, add this rate to the total monthly rate for 14 PVCs.
[3] For each PVC over 24 add this rate to the total monthly rate for 24 PVCs. (M)

Certain material on this page formerly appeared on Page 8-136.
Certain material previously found on this page can now be found on Page 8-63.

8. ADVANCED COMMUNICATIONS NETWORKS

8.3 FRAME RELAY SERVICE (T)(M)

8.3.5 RATES AND CHARGES

A. Monthly

4. Network-To-Network Information Transfer (NNIT) (Cont'd) (T)

	USOC	MONTHLY RATE
• 1.544 Mbps - NNIT, per Port		
- 1 PVC	17TAM	$210.00
- 2 PVCs	17TBM	247.00
- 3 PVCs	17TCM	284.00
- 4 PVCs	17TDM	321.00
- 5 PVCs	17TEM	358.00
- 6 PVCs through 14[1], per PVC	17TGM	19.00
- 15 PVCs through 24[2], per PVC	17THM	5.00
- Each additional PVC over 24[3], per PVC	17TJM	0.50
• 44.736 Mbps - NNIT, per Port		
- 1 PVC	17TUM	3,800.00
- 2 PVCs through 50[4], per PVC	17TVM	30.00
- 51 PVCs through 140[5], per PVC	17TWM	8.00
- 141 PVCs through 240[6], per PVC	17TYM	4.00
- 241 PVCs through 500[7], per PVC	17TZM	2.00

[1] For each PVC over 5, up to and including 14, add this rate to the monthly rate for 5 PVCs.
[2] For each PVC over 14, up to and including 24, add this rate to the total monthly rate for 14 PVCs.
[3] For each PVC over 24 add this rate to the total monthly rate for 24 PVCs.
[4] For each PVC over 1, up to and including 50, add this rate to the monthly rate for 1 PVC.
[5] For each PVC over 50, up to and including 140, add this rate to the total monthly rate for 50 PVCs.
[6] For each PVC over 140, up to and including 240, add this rate to the total monthly rate for 140 PVCs. (M)
[7] For each PVC over 240, up to and including 500, add this rate to the total monthly rate for 240 PVCs.

Certain material on this page formerly appeared on Page 8-137.
Certain material previously found on this page can now be found on Page 8-64.

8. ADVANCED COMMUNICATIONS NETWORKS

8.3 FRAME RELAY SERVICE
8.3.5 RATES AND CHARGES

A. Monthly (Cont'd)

	USOC	NONRECURRING CHARGE	MONTHLY RATE
5. Central Office Connecting Channel			
• Per connection between a Multiplexer and FRS Port or between another Company facility port and an FRS Port			
- For speeds up to 1.544 Mbps	CU5RR	$25.00	$ 0.65
- For speeds up to 44.736 Mbps	CU5RR	50.00	10.00
6. Transport Channels	N/A	[1]	[1]

[1] See Section 7 and/or 17 for Transport Channel rates and regulations. (C)

8. ADVANCED COMMUNICATIONS NETWORKS

8.3 FRAME RELAY SERVICE (S-y)
8.3.5 RATES AND CHARGES
A. Monthly (Cont'd)

	USOC	NONRECURRING CHARGE	MONTHLY RATE	
7. Optional Features and Functions				(S-y) (D-y)
• Customer Network Management (CNM)				(S-y)
- Per workstation registered address initial setup	NM6XM	$15.00	$67.00	(S-y) (T-y)
- Subsequent CNM order charge, per workstation registered address change or addition of CNM to existing FRS[1]	NR9FM	38.00	–	(S-y)

[1] When adding CNM to existing FRS, the Subsequent CNM Order Charge applies in addition to the Nonrecurring Charge for the initial setup of CNM. (S-y)

(y) Reissued matter filed under Transmittal No. 28, to become effective December 6, 2000.

8. ADVANCED COMMUNICATIONS NETWORKS

8.3 FRAME RELAY SERVICE (S-y)

8.3.5 RATES AND CHARGES

A. Monthly

7. Optional Features and Functions (Cont'd) (S-y)

(D-y)

	USOC	NONRECURRING CHARGE	MONTHLY RATE	(S-y)
• Priority UNIT PVC[1] (Grandfathered), per PVC				(S-y) (C-y)
- 56 or 64 kbps	PV7XM	$50.00	$ 5.00	(S-y)
- 112 or 128 kbps	PV7XM	50.00	5.83	
- 224 or 256 kbps	PV7XM	50.00	6.67	
- 336 or 384 kbps	PV7XM	50.00	7.50	
- 448 or 512 kbps	PV7XM	50.00	8.33	
- 672 or 768 kbps	PV7XM	50.00	9.17	
- 1.544 Mbps	PV7XM	50.00	10.00	
- 44.736 Mbps	PV7XM	50.00	10.00	

[1] Priority PVC rates and charges apply in addition to the UNIT PVC rates and charges set forth preceding. (S-y)

(y) Reissued matter filed under Transmittal No. 28, to become effective December 6, 2000.

(Filed under Transmittal 30.)

8. ADVANCED COMMUNICATIONS NETWORKS

8.3 FRAME RELAY SERVICE (S-y)
8.3.5 RATES AND CHARGES (Cont'd) (S-y)

(D-y)

(y) Reissued matter filed under Transmittal No. 28, to become effective December 6, 2000.

(Filed under Transmittal 30.)

8. ADVANCED COMMUNICATIONS NETWORKS

8.3 FRAME RELAY SERVICE
8.3.5 RATES AND CHARGES (Cont'd)

B. 12 Months

	USOC	NONRECURRING CHARGE	MONTHLY RATE	
1. Access Link, per Access Link				
• 56 or 64 kbps	L7AX1	$450.00	$ 70.00	
- Vintage				(T)
12/14/96 through 12/13/01			44.65	(T)
• 2-Wire 128 kbps	L7TA1	450.00	40.50	
• 1.544 Mbps	L7AX1	450.00	120.18	
2. Stand-Alone Access Link per Access Link				
• 56 or 64 kbps	NNLX1	450.00	70.00	
- Vintage				(T)
12/14/96 through 12/13/01			44.65	(T)
• 1.544 Mbps	NNLX1	450.00	120.18	

3. User-To-Network Information Transfer (UNIT)

	USOC	NONRECURRING CHARGE	
• 56 or 64 kbps			
- First PVC	NRBF1	$50.00	
- Each additional PVC	NRBF2	20.00	
- Subsequent PVC(s) order charge, per order[1]	NRBFO	75.00	(T)

[1] When appropriate, the "Each additional PVC" nonrecurring charge applies in addition to the "Subsequent PVC order charge". (T)

8. ADVANCED COMMUNICATIONS NETWORKS

8.3 FRAME RELAY SERVICE (S-y)

8.3.5 RATES AND CHARGES

B. 12 Months

3. User-To-Network Information Transfer (UNIT) (Cont'd)

	USOC	NONRECURRING CHARGE	
• 2-Wire 128 kbps (Grandfathered)			(C-y)
- First PVC	NRBF7	$300.00	(S-y)
- Each additional PVC	NRBF8	20.00	
- Subsequent PVC(s) order charge, per order[1]	NRBF9	75.00	
• 112 or 128 kbps (4-Wire), 224 or 256 kbps, 336 or 384 kbps, 448 or 512 kbps, and 672 or 768 kbps			
- First PVC	NRBF1	250.00	
- Each additional PVC	NRBF2	20.00	
- Subsequent PVC(s) order charge, per order[1]	NRBFO	75.00	

[1] When appropriate, the "Each additional PVC" nonrecurring charge applies in addition to the "Subsequent PVC order charge". (S-y)

(y) Reissued matter filed under Transmittal No. 28, to become effective December 6, 2000.

(Filed under Transmittal 30.)

8. ADVANCED COMMUNICATIONS NETWORKS

8.3 FRAME RELAY SERVICE (S-y)

8.3.5 RATES AND CHARGES

B. 12 Months

3. User-To-Network Information Transfer (UNIT) (Cont'd)

	USOC	NONRECURRING CHARGE	
• 1.544 Mbps			
- First PVC	NRBF1	$ 50.00	
- Each additional PVC	NRBF2	20.00	
- Subsequent PVC(s) order charge, per order[1]	NRBFO	75.00	
• 44.736 Mbps			
- First PVC	NRBF1	250.00	
- Each additional PVC	NRBF2	50.00	
- Subsequent PVC(s) order charge, per order[1]	NRBFO	75.00	(S-y)
• Fault Tolerant Service (Grandfathered), per UNIT			(C-y) (S-y)
- Initial Service Establishment	NRBF4	500.00	
- Subsequent Service Establishment	NRBF5	50.00	
- Activation and Restoral	NRBF6	500.00	

[1] When appropriate, the "Each additional PVC" nonrecurring charge applies in addition to the "Subsequent PVC order charge". (S-y)

(y) Reissued matter filed under Transmittal No. 28, to become effective December 6, 2000.

(Filed under Transmittal 30.)

8. ADVANCED COMMUNICATIONS NETWORKS

8.3 FRAME RELAY SERVICE (S-y)

8.3.5 RATES AND CHARGES

B. 12 Months

3. User-To-Network Information Transfer (UNIT) (Cont'd)

	USOC	MONTHLY RATE	
• 56 or 64 kbps - UNIT, per Port			
- 0 PVCs, used with Fault Tolerant Service	17T91	$ 33.25	
- 1 PVC	17TA1	37.32	
- 2 PVCs	17TB1	42.30	
- 3 PVCs	17TC1	45.40	
- 4 PVCs	17TD1	48.51	
- 5 PVCs	17TE1	51.58	
- 6 PVCs through 14[1], per PVC	17TG1	1.18	
- 15 PVCs through 24[2], per PVC	17TH1	0.26	
- Each additional PVC over 24[3], per PVC	17TJ1	0.25	(S-y)
• 2-Wire 128 kbps – UNIT (Grandfathered), per Port			(C-y) (S-y)
- 1 PVC	18TB1	85.50	
- 2 through 8 PVCs[4]	18TC1	7.47	

[1] For each PVC over 5, up to and including 14, add this rate to the monthly rate for 5 PVCs.
[2] For each PVC over 14, up to and including 24, add this rate to the total monthly rate for 14 PVCs.
[3] For each PVC over 24 add this rate to the total monthly rate for 24 PVCs.
[4] For each PVC over 1, up to and including 8, add this rate to the monthly rate for 1 PVCs. (S-y)

(y) Reissued matter filed under Transmittal No. 28, to become effective December 6, 2000.

(Filed under Transmittal 30.)

8. ADVANCED COMMUNICATIONS NETWORKS

8.3 FRAME RELAY SERVICE (T)(M)

8.3.5 RATES AND CHARGES

B. 12 Months

3. User-To-Network Information Transfer (UNIT) (Cont'd) (T)

	USOC	MONTHLY RATE	
• 112 or 128 kbps (4Wire) - UNIT, per Port			
- 1 PVC	17TA1	$114.00	(T)
- 2 PVCs	17TB1	116.85	
- 3 PVCs	17TC1	119.70	
- 4 PVCs	17TD1	122.55	
- 5 PVCs	17TE1	125.40	
- 6 PVCs through 14[1], per PVC	17TG1	1.15	
- 15 PVCs through 24[2], per PVC	17TH1	0.80	
- Each additional PVC over 24[3], per PVC	17TJ1	0.50	

[1] For each PVC over 5, up to and including 14, add this rate to the monthly rate for 5 PVCs.

[2] For each PVC over 14, up to and including 24, add this rate to the total monthly rate for 14 PVCs.

[3] For each PVC over 24 add this rate to the total monthly rate for 24 PVCs. (M)

Certain material on this page formerly appeared on Page 8-143.
Certain material previously found on this page can now be found on Page 8-106.

8. ADVANCED COMMUNICATIONS NETWORKS

8.3 FRAME RELAY SERVICE (T)(M)

8.3.5 RATES AND CHARGES

B. 12 Months

3. User-To-Network Information Transfer (UNIT) (Cont'd) (T)

	USOC	MONTHLY RATE
• 224 or 256 kbps - UNIT, per Port		
- 1 PVC	17TA1	$152.00
- 2 PVCs	17TB1	157.70
- 3 PVCs	17TC1	163.40
- 4 PVCs	17TD1	169.10
- 5 PVCs	17TE1	174.80
- 6 PVCs through 14[1], per PVC	17TG1	2.25
- 15 PVCs through 24[2], per PVC	17TH1	1.55
- Each additional PVC over 24[3], per PVC	17TJ1	0.50
• 336 or 384 kbps - UNIT, per Port		
- 1 PVC	17TA1	190.00
- 2 PVCs	17TB1	198.30
- 3 PVCs	17TC1	206.65
- 4 PVCs	17TD1	214.95
- 5 PVCs	17TE1	223.25
- 6 PVCs through 14[1], per PVC	17TG1	3.35
- 15 PVCs through 24[2], per PVC	17TH1	2.40
- Each additional PVC over 24[3], per PVC	17TJ1	0.50

[1] For each PVC over 5, up to and including 14, add this rate to the monthly rate for 5 PVCs.

[2] For each PVC over 14, up to and including 24, add this rate to the total monthly rate for 14 PVCs.

[3] For each PVC over 24 add this rate to the total monthly rate for 24 PVCs. (M)

Certain material on this page formerly appeared on Page 8-144.
Certain material previously found on this page can now be found on Pages 8-107 and 8-108.

8. ADVANCED COMMUNICATIONS NETWORKS

8.3 FRAME RELAY SERVICE (T)(M)

8.3.5 RATES AND CHARGES

B. 12 Months

3. User-To-Network Information Transfer (UNIT) (Cont'd) (T)

	USOC	MONTHLY RATE
• 448 or 512 kbps - UNIT, per Port		
- 1 PVC	17TA1	$223.25
- 2 PVCs	17TB1	232.30
- 3 PVCs	17TC1	241.30
- 4 PVCs	17TD1	250.35
- 5 PVCs	17TE1	259.35
- 6 PVCs through 14[1], per PVC	17TG1	3.55
- 15 PVCs through 24[2], per PVC	17TH1	2.40
- Each additional PVC over 24[3], per PVC	17TJ1	0.50
• 672 or 768 kbps - UNIT, per Port		
- 1 PVC	17TA1	294.50
- 2 PVCs	17TB1	307.80
- 3 PVCs	17TC1	321.10
- 4 PVCs	17TD1	334.40
- 5 PVCs	17TE1	347.70
- 6 PVCs through 14[1], per PVC	17TG1	3.80
- 15 PVCs through 24[2], per PVC	17TH1	2.60
- Each additional PVC over 24[3], per PVC	17TJ1	0.80

[1] For each PVC over 5, up to and including 14, add this rate to the monthly rate for 5 PVCs.
[2] For each PVC over 14, up to and including 24, add this rate to the total monthly rate for 14 PVCs.
[3] For each PVC over 24 add this rate to the total monthly rate for 24 PVCs. (M)

Certain material on this page formerly appeared on Page 8-145.
Certain material previously found on this page can now be found on Page 8-109.

8. ADVANCED COMMUNICATIONS NETWORKS

8.3 FRAME RELAY SERVICE (T)(M)

8.3.5 RATES AND CHARGES

B. 12 Months

3. User-To-Network Information Transfer (UNIT) (Cont'd) (T)

	USOC	MONTHLY RATE
• 1.544 Mbps - UNIT, per Port		
- 0 PVCs, used with Fault Tolerant Service	17T91	$ 204.25
- 1 PVC	17TA1	228.00
- 2 PVCs	17TB1	263.15
- 3 PVCs	17TC1	298.30
- 4 PVCs	17TD1	333.45
- 5 PVCs	17TE1	368.60
- 6 PVCs through 14[1], per PVC	17TG1	18.05
- 15 PVCs through 24[2], per PVC	17TH1	4.75
- Each additional PVC over 24[3], per PVC	17TJ1	0.50

[1] For each PVC over 5, up to and including 14, add this rate to the monthly rate for 5 PVCs.

[2] For each PVC over 14, up to and including 24, add this rate to the total monthly rate for 14 PVCs.

[3] For each PVC over 24 add this rate to the total monthly rate for 24 PVCs. (M)

Certain material on this page formerly appeared on Page 8-146
Certain material previously found on this page can now be found on Page 8-110.

8. ADVANCED COMMUNICATIONS NETWORKS

8.3 FRAME RELAY SERVICE (T)(M)

8.3.5 RATES AND CHARGES

B. 12 Months

3. User-To-Network Information Transfer (UNIT) (Cont'd) (T)

	USOC	MONTHLY RATE	
• 44.736 Mbps - UNIT, per Port			
- 0 PVCs, used with Fault Tolerant Service	17T91	$3,325.00	(T)
- 1 PVC	17TU1	3,610.00	
- 2 PVCs through 50[1], per PVC	17TV1	28.50	(T)
- 51 PVCs through 140[2], per PVC	17TW1	7.60	
- 141 PVCs through 240[3], per PVC	17TY1	3.80	
- 241 PVCs through 500[4], per PVC	17TZ1	1.90	

[1] For each PVC over 1, up to and including 50, add this rate to the monthly rate for 1 PVC. (T)

[2] For each PVC over 50, up to and including 140, add this rate to the total monthly rate for 50 PVCs. (T)

[3] For each PVC over 140, up to and including 240, add this rate to the total monthly rate for 140 PVCs. (T)

[4] For each PVC over 240, up to and including 500, add this rate to the total monthly rate for 240 PVCs. (T) (M)

Certain material on this page formerly appeared on Page 8-146
Certain material previously found on this page can now be found on Page 8-111.

8. ADVANCED COMMUNICATIONS NETWORKS

8.3 FRAME RELAY SERVICE (T)(M)
8.3.5 RATES AND CHARGES
B. 12 Months (Cont'd) (T)

4. Network-To-Network Information Transfer (NNIT)

	USOC	NONRECURRING CHARGE
• 56 or 64 kbps		
- First PVC	NRBF1	$ 50.00
- Each additional PVC	NRBF2	20.00
- Subsequent PVC(s) order charge, per order[1]	NRBFO	75.00
• 112 or 128 kbps, 224 or 256 kbps, 336 or 384 kbps, 448 or 512 kbps, and 672 or 768 kbps		
- First PVC	NRBF1	250.00
- Each additional PVC	NRBF2	20.00
- Subsequent PVC(s) order charge, per order[1]	NRBFO	75.00
• 1.544 Mbps		
- First PVC	NRBF1	50.00
- Each additional PVC	NRBF2	20.00
- Subsequent PVC(s) order charge, per order[1]	NRBFO	75.00

[1] When appropriate, the "Each additional PVC" nonrecurring charge applies in addition to the "Subsequent PVC order charge". (M)

Certain material on this page formerly appeared on Page 8-147.
Certain material previously found on this page can now be found on Page 8-112.

8. ADVANCED COMMUNICATIONS NETWORKS

8.3 FRAME RELAY SERVICE (T)(M)
8.3.5 RATES AND CHARGES
B. 12 Months
4. Network-To-Network Information Transfer (NNIT) (Cont'd) (T)

	USOC	NONRECURRING CHARGE
• 44.736 Mbps		
- First PVC	NRBF1	$250.00
- Each additional PVC	NRBF2	50.00
- Subsequent PVC(s) order charge, per order[1]	NRBFO	75.00

[1] When appropriate, the "Each additional PVC" nonrecurring charge applies in addition to the "Subsequent PVC order charge". (M)

Certain material on this page formerly appeared on Page 8-147.1.
Certain material previously found on this page can now be found on Page 8-113.

8. ADVANCED COMMUNICATIONS NETWORKS

Certain material previously found on this page can now be found on Page 8-114.

8. ADVANCED COMMUNICATIONS NETWORKS

8.3 FRAME RELAY SERVICE (T)(M)

8.3.5 RATES AND CHARGES

B. Monthly

4. Network-To-Network Information Transfer (NNIT) (Cont'd) (T)

	USOC	MONTHLY RATE
• 56 or 64 kbps - NNIT, per Port		
- 1 PVC	17TA1	$36.10
- 2 PVCs	17TB1	40.25
- 3 PVCs	17TC1	44.35
- 4 PVCs	17TD1	48.50
- 5 PVCs	17TE1	52.65
- 6 PVCs through 14[1], per PVC	17TG1	0.50
- 15 PVCs through 24[2], per PVC	17TH1	0.30
- Each additional PVC over 24[3], per PVC	17TJ1	0.25
• 112 or 128 kbps - NNIT, per Port		
- 1 PVC	17TA1	80.75
- 2 PVCs	17TB1	83.60
- 3 PVCs	17TC1	86.45
- 4 PVCs	17TD1	89.30
- 5 PVCs	17TE1	92.15
- 6 PVCs through 14[1], per PVC	17TG1	1.15
- 15 PVCs through 24[2], per PVC	17TH1	0.80
- Each additional PVC over 24[3], per PVC	17TJ1	0.50

[1] For each PVC over 5, up to and including 14, add this rate to the monthly rate for 5 PVCs.
[2] For each PVC over 14, up to and including 24, add this rate to the total monthly rate for 14 PVCs.
[3] For each PVC over 24 add this rate to the total monthly rate for 24 PVCs. (M)

Certain material on this page formerly appeared on Page 8-148.
Certain material previously found on this page can now be found on Page 8-115.

8. ADVANCED COMMUNICATIONS NETWORKS

8.3 FRAME RELAY SERVICE (T)(M)

8.3.5 RATES AND CHARGES

B. Monthly

4. Network-To-Network Information Transfer (NNIT) (Cont'd) (T)

	USOC	MONTHLY RATE
• 224 or 256 kbps - NNIT, per Port		
- 1 PVC	17TA1	$118.75
- 2 PVCs	17TB1	124.45
- 3 PVCs	17TC1	130.15
- 4 PVCs	17TD1	135.85
- 5 PVCs	17TE1	141.55
- 6 PVCs through 14[1], per PVC	17TG1	2.25
- 15 PVCs through 24[2], per PVC	17TH1	1.55
- Each additional PVC over 24[3], per PVC	17TJ1	0.50
• 336 or 384 kbps - NNIT, per Port		
- 1 PVC	17TA1	161.50
- 2 PVCs	17TB1	169.80
- 3 PVCs	17TC1	178.15
- 4 PVCs	17TD1	186.45
- 5 PVCs	17TE1	194.75
- 6 PVCs through 14[1], per PVC	17TG1	3.35
- 15 PVCs through 24[2], per PVC	17TH1	2.40
- Each additional PVC over 24[3], per PVC	17TJ1	0.50

[1] For each PVC over 5, up to and including 14, add this rate to the monthly rate for 5 PVCs.
[2] For each PVC over 14, up to and including 24, add this rate to the total monthly rate for 14 PVCs.
[3] For each PVC over 24 add this rate to the total monthly rate for 24 PVCs. (M)

Certain material on this page formerly appeared on Page 8-149.
Certain material previously found on this page can now be found on Page 8-116.

8. ADVANCED COMMUNICATIONS NETWORKS

8.3 FRAME RELAY SERVICE (T)(M)

8.3.5 RATES AND CHARGES

B. Monthly

4. Network-To-Network Information Transfer (NNIT) (Cont'd) (T)

	USOC	MONTHLY RATE
• 448 or 512 kbps - NNIT, per Port		
- 1 PVC	17TA1	$194.75
- 2 PVCs	17TB1	203.80
- 3 PVCs	17TC1	212.80
- 4 PVCs	17TD1	221.85
- 5 PVCs	17TE1	230.85
- 6 PVCs through 14[1], per PVC	17TG1	3.55
- 15 PVCs through 24[2], per PVC	17TH1	2.40
- Each additional PVC over 24[3], per PVC	17TJ1	0.50
• 672 or 768 kbps - NNIT, per Port		
- 1 PVC	17TA1	266.00
- 2 PVCs	17TB1	278.35
- 3 PVCs	17TC1	290.70
- 4 PVCs	17TD1	303.05
- 5 PVCs	17TE1	315.40
- 6 PVCs through 14[1], per PVC	17TG1	3.55
- 15 PVCs through 24[2], per PVC	17TH1	2.40
- Each additional PVC over 24[3], per PVC	17TJ1	0.50

[1] For each PVC over 5, up to and including 14, add this rate to the monthly rate for 5 PVCs.
[2] For each PVC over 14, up to and including 24, add this rate to the total monthly rate for 14 PVCs.
[3] For each PVC over 24 add this rate to the total monthly rate for 24 PVCs. (M)

Certain material on this page formerly appeared on Page 8-150.
Certain material previously found on this page can now be found on Page 8-117.

8. ADVANCED COMMUNICATIONS NETWORKS

8.3 FRAME RELAY SERVICE (T)(M)

8.3.5 RATES AND CHARGES

B. 12 Months

4. Network-To-Network Information Transfer (NNIT) (Cont'd) (T)

	USOC	MONTHLY RATE
• 1.544 Mbps - NNIT, per Port		
- 1 PVC	17TA1	$ 199.50
- 2 PVCs	17TB1	234.65
- 3 PVCs	17TC1	269.80
- 4 PVCs	17TD1	304.95
- 5 PVCs	17TE1	340.10
- 6 PVCs through 14[1], per PVC	17TG1	18.05
- 15 PVCs through 24[2], per PVC	17TH1	4.75
- Each additional PVC over 24[3], per PVC	17TJ1	0.50

1] For each PVC over 5, up to and including 14, add this rate to the monthly rate for 5 PVCs.

[2] For each PVC over 14, up to and including 24, add this rate to the total monthly rate for 14 PVCs.

[3] For each PVC over 24 add this rate to the total monthly rate for 24 PVCs. (M)

Certain material on this page formerly appeared on Page 8-151.
Certain material previously found on this page can now be found on Page 8-118.

8. ADVANCED COMMUNICATIONS NETWORKS

8.3 FRAME RELAY SERVICE (T)(M)

8.3.5 RATES AND CHARGES

B. 12 Months

4. Network-To-Network Information Transfer (NNIT) (Cont'd) (T)

	USOC	MONTHLY RATE	
• 44.736 Mbps - NNIT, per Port			
- 1 PVC	17TU1	$3,610.00	(T)
- 2 PVCs through 50[1], per PVC	17TV1	28.50	
- 51 PVCs through 140[2], per PVC	17TW1	7.60	
- 141 PVCs through 240[3], per PVC	17TY1	3.80	
- 241 PVCs through 500[4], per PVC	17TZ1	1.90	

[1] For each PVC over 1, up to and including 50, add this rate to the monthly rate for 1 PVC. (T)

[2] For each PVC over 50, up to and including 140, add this rate to the total monthly rate for 50 PVCs. (T)

[3] For each PVC over 140, up to and including 240, add this rate to the total monthly rate for 140 PVCs. (T)

[4] For each PVC over 240, up to and including 500, add this rate to the total monthly rate for 240 PVCs. (T) (M)

Certain material on this page formerly appeared on Page 8-151.
Certain material previously found on this page can now be found on Pages 8-119 and 8-120.

8. ADVANCED COMMUNICATIONS NETWORKS

8.3 FRAME RELAY SERVICE
8.3.5 RATES AND CHARGES

B. 12 Months (Cont'd)

	USOC	NONRECURRING CHARGE	MONTHLY RATE
5. Central Office Connecting Channel			
• Per connection between a Multiplexer and FRS Port or between a Company facility port and an FRS Port			
- For speeds up to 1.544 Mbps	CU5SR	$25.00	$0.62
- For speeds up to 44.736 Mbps	CU5SR	50.00	9.50
6. Transport Channels	N/A	[1]	[1]

[1] See Section 7 and/or 17 for Transport Channel rates and regulations. (C)

8. ADVANCED COMMUNICATIONS NETWORKS

8.3 FRAME RELAY SERVICE (T)(M)
8.3.5 RATES AND CHARGES (T)
B. 12 Months (Cont'd)

	USOC	NONRECURRING CHARGE	MONTHLY RATE	
7. Optional Features and Functions				
• Customer Network Management (CNM)				
- Per workstation registered address initial setup	NM6X1	15.00	$63.65	(T)
- Subsequent CNM order charge, per workstation registered address change or addition of CNM to existing FRS[1]	NR9FM	38.00	–	(T)

[1] When adding CNM to existing FRS, the Subsequent CNM Order Charge applies in addition to the Nonrecurring Charge for the initial setup of CNM. (T) (M)

Certain material on this page formerly appeared on Page 8-152.
Certain material previously found on this page can now be found on Page 8-122.

8. ADVANCED COMMUNICATIONS NETWORKS

8.3 FRAME RELAY SERVICE (S-y)

8.3.5 RATES AND CHARGES

B. 12 Months

7. Optional Features and Functions(Cont'd)

	USOC	NONRECURRING CHARGE	MONTHLY RATE	
• Priority UNIT PVC[1] (Grandfathered), per PVC				(S-y) (C-y)
- 56 or 64 kbps	PV7X1	$50.00	$4.75	(S-y)
- 112 or 128 kbps	PV7X1	50.00	5.54	
- 224 or 256 kbps	PV7X1	50.00	6.34	
- 336 or 384 kbps	PV7X1	50.00	7.13	
- 448 or 512 kbps	PV7X1	50.00	7.91	
- 672 or 768 kbps	PV7X1	50.00	8.71	
- 1.544 Mbps	PV7X1	50.00	9.50	
- 44.736 Mbps	PV7X1	50.00	9.50	

[1] Priority PVC rates and charges apply in addition to the UNIT PVC rates and charges set forth preceding. (S-y)

(y) Reissued matter filed under Transmittal No. 28, to become effective December 6, 2000.

(Filed under Transmittal 30.)

8. ADVANCED COMMUNICATIONS NETWORKS

8.3 FRAME RELAY SERVICE (S-y)
8.3.5 RATES AND CHARGES (Cont'd) (T-y)

(D-y)

(y) Reissued matter filed under Transmittal No. 28, to become effective December 6, 2000.

(Filed under Transmittal 30.)

8. ADVANCED COMMUNICATIONS NETWORKS

8.3 FRAME RELAY SERVICE
8.3.5 RATES AND CHARGES (Cont'd)

C. 24 Months

	USOC	NONRECURRING CHARGE	MONTHLY RATE	
1. Access Link, per Access Link				
• 56 or 64 kbps	L7AX2	$450.00	$ 68.50	
- Vintage				(T)
12/14/96 through 12/13/01			44.05	(T)
• 1.544 Mbps	L7AX2	450.00	118.59	
2. Stand-Alone Access Link per Access Link				
• 56 or 64 kbps	NNLX2	450.00	68.50	
- Vintage				(T)
12/14/96 through 12/13/01			44.05	(T)
• 1.544 Mbps	NNLX2	450.00	118.59	

3. User-To-Network Information Transfer (UNIT)

	USOC	NONRECURRING CHARGE	
• 56 or 64 kbps			
- First PVC	NRBF1	$50.00	
- Each additional PVC	NRBF2	20.00	
- Subsequent PVC(s) order charge, per order[1]	NRBFO	75.00	(T)

[1] When appropriate, the "Each additional PVC" nonrecurring charge applies in addition to the "Subsequent PVC order charge". (T)

(Filed under Transmittal No. 137.)

8. ADVANCED COMMUNICATIONS NETWORKS

8.3 FRAME RELAY SERVICE (T)(M)

8.3.5 RATES AND CHARGES

C. 24 Months

3. User-To-Network Information Transfer (UNIT) (Cont'd) (T)

	USOC	NONRECURRING CHARGE
• 112 or 128 kbps, 224 or 256 kbps, 336 or 384 kbps, 448 or 512 kbps, and 672 or 768 kbps		
- First PVC	NRBF1	$250.00
- Each additional PVC	NRBF2	20.00
- Subsequent PVC(s) order charge, per order[1]	NRBFO	75.00
• 1.544 Mbps		
- First PVC	NRBF1	50.00
- Each additional PVC	NRBF2	20.00
- Subsequent PVC(s) order charge, per order[1]	NRBFO	75.00

[1] When appropriate, the "Each additional PVC" nonrecurring charge applies in addition to the "Subsequent PVC order charge". (M)

Certain material on this page formerly appeared on Page 8-156.
Certain material previously found on this page can now be found on Page 8-128.

8. ADVANCED COMMUNICATIONS NETWORKS

8.3 FRAME RELAY SERVICE (S-y)

8.3.5 RATES AND CHARGES

C. 24 Months

3. User-To-Network Information Transfer (UNIT) (Cont'd)

	USOC	NONRECURRING CHARGE	
• 44.736 Mbps			
- First PVC	NRBF1	$250.00	
- Each additional PVC	NRBF2	50.00	
- Subsequent PVC(s) order charge, per order[1]	NRBFO	75.00	(S-y)
• Fault Tolerant Service (Grandfathered), per UNIT			(C-y) (S-y)
- Initial Service Establishment	NRBF4	500.00	
- Subsequent Service Establishment	NRBF5	50.00	
- Activation and Restoral	NRBF6	500.00	

[1] When appropriate, the "Each additional PVC" nonrecurring charge applies in addition to the "Subsequent PVC order charge". (S-y)

(y) Reissued matter filed under Transmittal No. 28, to become effective December 6, 2000.

(Filed under Transmittal 30.)

8. ADVANCED COMMUNICATIONS NETWORKS

8.3 FRAME RELAY SERVICE (T)(M)

8.3.5 RATES AND CHARGES

C. 24 Months

3. User-To-Network Information Transfer (UNIT) (Cont'd) (T)

	USOC	MONTHLY RATE
• 56 or 64 kbps - UNIT, per Port		
- 0 PVCs, used with Fault Tolerant Service	17T92	$ 32.81
- 1 PVC	17TA2	36.83
- 2 PVCs	17TB2	41.75
- 3 PVCs	17TC2	44.80
- 4 PVCs	17TD2	47.87
- 5 PVCs	17TE2	50.90
- 6 PVCs through 14[1], per PVC	17TG2	1.16
- 15 PVCs through 24[2], per PVC	17TH2	0.25
- Each additional PVC over 24[3], per PVC	17TJ2	0.25
• 112 or 128 kbps - UNIT, per Port		
- 1 PVC	17TA2	112.50
- 2 PVCs	17TB2	115.30
- 3 PVCs	17TC2	118.15
- 4 PVCs	17TD2	120.95
- 5 PVCs	17TE2	123.75
- 6 PVCs through 14[1], per PVC	17TG2	1.15
- 15 PVCs through 24[2], per PVC	17TH2	0.80
- Each additional PVC over 24[3], per PVC	17TJ2	0.45

[1] For each PVC over 5, up to and including 14, add this rate to the monthly rate for 5 PVCs.
[2] For each PVC over 14, up to and including 24, add this rate to the total monthly rate for 14 PVCs.
[3] For each PVC over 24 add this rate to the total monthly rate for 24 PVCs. (M)

Certain material on this page formerly appeared on Page 8-157.
Certain material previously found on this page can now be found on Pages 8-130 and 8-131.

8. ADVANCED COMMUNICATIONS NETWORKS

8.3 FRAME RELAY SERVICE (T)(M)

8.3.5 RATES AND CHARGES

C. 24 Months

3. User-To-Network Information Transfer (UNIT) (Cont'd) (T)

	USOC	MONTHLY RATE
• 224 or 256 kbps - UNIT, per Port		
- 1 PVC	17TA2	$150.00
- 2 PVCs	17TB2	155.65
- 3 PVCs	17TC2	161.25
- 4 PVCs	17TD2	166.90
- 5 PVCs	17TE2	172.50
- 6 PVCs through 14[1], per PVC	17TG2	2.20
- 15 PVCs through 24[2], per PVC	17TH2	1.55
- Each additional PVC over 24[3], per PVC	17TJ2	0.45
• 336 or 384 kbps - UNIT, per Port		
- 1 PVC	17TA2	187.50
- 2 PVCs	17TB2	195.70
- 3 PVCs	17TC2	203.90
- 4 PVCs	17TD2	212.10
- 5 PVCs	17TE2	220.30
- 6 PVCs through 14[1], per PVC	17TG2	3.30
- 15 PVCs through 24[2], per PVC	17TH2	2.35
- Each additional PVC over 24[3], per PVC	17TJ2	0.45

[1] For each PVC over 5, up to and including 14, add this rate to the monthly rate for 5 PVCs.
[2] For each PVC over 14, up to and including 24, add this rate to the total monthly rate for 14 PVCs.
[3] For each PVC over 24 add this rate to the total monthly rate for 24 PVCs. (M)

Certain material on this page formerly appeared on Page 8-158.
Certain material previously found on this page can now be found on Page 8-132.

8. ADVANCED COMMUNICATIONS NETWORKS

Certain material previously found on this page can now be found on Page 8-133.

8. ADVANCED COMMUNICATIONS NETWORKS

8.3 FRAME RELAY SERVICE (T)(M)

8.3.5 RATES AND CHARGES

C. 24 Months

3. User-To-Network Information Transfer (UNIT) (Cont'd) (T)

	USOC	MONTHLY RATE
• 448 or 512 kbps - UNIT, per Port		
- 1 PVC	17TA2	$220.30
- 2 PVCs	17TB2	229.20
- 3 PVCs	17TC2	238.15
- 4 PVCs	17TD2	247.05
- 5 PVCs	17TE2	255.95
- 6 PVCs through 14[1], per PVC	17TG2	3.50
- 15 PVCs through 24[2], per PVC	17TH2	2.35
- Each additional PVC over 24[3], per PVC	17TJ2	0.45
• 672 or 768 kbps - UNIT, per Port		
- 1 PVC	17TA2	290.65
- 2 PVCs	17TB2	303.75
- 3 PVCs	17TC2	316.90
- 4 PVCs	17TD2	330.00
- 5 PVCs	17TE2	343.15
- 6 PVCs through 14[1], per PVC	17TG2	3.75
- 15 PVCs through 24[2], per PVC	17TH2	2.60
- Each additional PVC over 24[3], per PVC	17TJ2	0.80

[1] For each PVC over 5, up to and including 14, add this rate to the monthly rate for 5 PVCs.
[2] For each PVC over 14, up to and including 24, add this rate to the total monthly rate for 14 PVCs.
[3] For each PVC over 24 add this rate to the total monthly rate for 24 PVCs. (M)

Certain material on this page formerly appeared on Page 8-159.
Certain material previously found on this page can now be found on Page 8-132.

8. ADVANCED COMMUNICATIONS NETWORKS

8.3 FRAME RELAY SERVICE (T)(M)

8.3.5 RATES AND CHARGES

C. 24 Months

3. User-To-Network Information Transfer (UNIT) (Cont'd) (T)

	USOC	MONTHLY RATE
• 1.544 Mbps - UNIT, per Port		
- 0 PVCs, used with Fault Tolerant Service	17T92	$ 201.56
- 1 PVC	17TA2	225.00
- 2 PVCs	17TB2	259.70
- 3 PVCs	17TC2	294.40
- 4 PVCs	17TD2	329.05
- 5 PVCs	17TE2	363.75
- 6 PVCs through 14[1], per PVC	17TG2	17.80
- 15 PVCs through 24[2], per PVC	17TH2	4.70
- Each additional PVC over 24[3], per PVC	17TJ2	0.45

[1] For each PVC over 5, up to and including 14, add this rate to the monthly rate for 5 PVCs.
[2] For each PVC over 14, up to and including 24, add this rate to the total monthly rate for 14 PVCs.
[3] For each PVC over 24 add this rate to the total monthly rate for 24 PVCs. (M)

Certain material on this page formerly appeared on Page 8-160.
Certain material previously found on this page can now be found on Page 8-135.

8. ADVANCED COMMUNICATIONS NETWORKS

8.3 FRAME RELAY SERVICE (T)(M)

8.3.5 RATES AND CHARGES

C. 24 Months

3. User-To-Network Information Transfer (UNIT) (Cont'd) (T)

	USOC	MONTHLY RATE	
• 44.736 Mbps - UNIT, per Port			
- 0 PVCs, used with Fault Tolerant Service	17T92	$3,281.25	(T)
- 1 PVC	17TU2	3,562.50	
- 2 PVCs through 50[1], per PVC	17TV2	28.13	(T)
- 51 PVCs through 140[2], per PVC	17TW2	7.50	
- 141 PVCs through 240[3], per PVC	17TY2	3.75	
- 241 PVCs through 500[4], per PVC	17TZ2	1.88	

[1] For each PVC over 1, up to and including 50, add this rate to the monthly rate for 1 PVC. (T)

[2] For each PVC over 50, up to and including 140, add this rate to the total monthly rate for 50 PVCs. (T)

[3] For each PVC over 140, up to and including 240, add this rate to the total monthly rate for 140 PVCs. (T)

[4] For each PVC over 240, up to and including 500, add this rate to the total monthly rate for 240 PVCs. (T) (M)

Certain material on this page formerly appeared on Page 8-160.
Certain material previously found on this page can now be found on Page 8-136.

8. ADVANCED COMMUNICATIONS NETWORKS

8.3 FRAME RELAY SERVICE (T)(M)
8.3.5 RATES AND CHARGES (T)

C. 24 Months (Cont'd)

4. Network-To-Network Information Transfer (NNIT)

	USOC	NONRECURRING CHARGE
• 56 or 64 kbps		
- First PVC	NRBF1	$ 50.00
- Each additional PVC	NRBF2	20.00
- Subsequent PVC(s) order charge, per order[1]	NRBFO	75.00
• 112 or 128 kbps, 224 or 256 kbps, 336 or 384 kbps, 448 or 512 kbps, and 672 or 768 kbps		
- First PVC	NRBF1	250.00
- Each additional PVC	NRBF2	20.00
- Subsequent PVC(s) order charge, per order[1]	NRBFO	75.00
• 1.544 Mbps		
- First PVC	NRBF1	50.00
- Each additional PVC	NRBF2	20.00
- Subsequent PVC(s) order charge, per order[1]	NRBFO	75.00

[1] When appropriate, the "Each additional PVC" nonrecurring charge applies in addition to the "Subsequent PVC order charge". (M)

Certain material on this page formerly appeared on Page 8-161.
Certain material previously found on this page can now be found on Pages 8-137 and 8-138.

8. ADVANCED COMMUNICATIONS NETWORKS

8.3 FRAME RELAY SERVICE (T)(M)

8.3.5 RATES AND CHARGES

C. 24 Months

4. Network-To-Network Information Transfer (NNIT) (Cont'd) (T)

	USOC	NONRECURRING CHARGE
• 44.736 Mbps		
- First PVC	NRBF1	$250.00
- Each additional PVC	NRBF2	50.00
- Subsequent PVC(s) order charge, per order[1]	NRBFO	75.00

[1] When appropriate, the "Each additional PVC" nonrecurring charge applies in addition to the "Subsequent PVC order charge". (M)

Certain material on this page formerly appeared on Page 8-161.1.
Certain material previously found on this page can now be found on Pages 8-139 and 8-140.

8. ADVANCED COMMUNICATIONS NETWORKS

8.3 FRAME RELAY SERVICE (T)(M)

8.3.5 RATES AND CHARGES

C. 24 Months

4. Network-To-Network Information Transfer (NNIT) (Cont'd) (T)

	USOC	MONTHLY RATE
• 56 or 64 kbps - NNIT, per Port		
- 1 PVC	17TA2	$35.65
- 2 PVCs	17TB2	39.70
- 3 PVCs	17TC2	43.80
- 4 PVCs	17TD2	47.85
- 5 PVCs	17TE2	51.95
- 6 PVCs through 14[1], per PVC	17TG2	0.45
- 15 PVCs through 24[2], per PVC	17TH2	0.30
- Each additional PVC over 24[3], per PVC	17TJ2	0.25

[1] For each PVC over 5, up to and including 14, add this rate to the monthly rate for 5 PVCs.

[2] For each PVC over 14, up to and including 24, add this rate to the total monthly rate for 14 PVCs.

[3] For each PVC over 24 add this rate to the total monthly rate for 24 PVCs. (M)

Certain material on this page formerly appeared on Page 8-162.
Certain material previously found on this page can now be found on Page 8-141.

8. ADVANCED COMMUNICATIONS NETWORKS

8.3 FRAME RELAY SERVICE (T)(M)

8.3.5 RATES AND CHARGES

C. 24 Months

4. Network-To-Network Information Transfer (NNIT) (Cont'd) (T)

	USOC	MONTHLY RATE	
• 112 or 128 kbps - NNIT, per Port			
- 1 PVC	17TA2	$79.70	(T)
- 2 PVCs	17TB2	82.50	
- 3 PVCs	17TC2	85.30	
- 4 PVCs	17TD2	88.15	
- 5 PVCs	17TE2	90.95	
- 6 PVCs through 14[1], per PVC	17TG2	1.15	
- 15 PVCs through 24[2], per PVC	17TH2	0.80	
- Each additional PVC over 24[3], per PVC	17TJ2	0.45	

[1] For each PVC over 5, up to and including 14, add this rate to the monthly rate for 5 PVCs.

[2] For each PVC over 14, up to and including 24, add this rate to the total monthly rate for 14 PVCs.

[3] For each PVC over 24 add this rate to the total monthly rate for 24 PVCs. (M)

Certain material on this page formerly appeared on Page 8-162.
Certain material previously found on this page can now be found on Page 8-142.

8. ADVANCED COMMUNICATIONS NETWORKS

8.3 FRAME RELAY SERVICE (T)(M)

8.3.5 RATES AND CHARGES

C. 24 Months

4. Network-To-Network Information Transfer (NNIT) (Cont'd) (T)

	USOC	MONTHLY RATE
• 224 or 256 kbps - NNIT, per Port		
- 1 PVC	17TA2	$117.20
- 2 PVCs	17TB2	122.80
- 3 PVCs	17TC2	128.45
- 4 PVCs	17TD2	134.05
- 5 PVCs	17TE2	139.70
- 6 PVCs through 14[1], per PVC	17TG2	2.20
- 15 PVCs through 24[2], per PVC	17TH2	1.55
- Each additional PVC over 24[3], per PVC	17TJ2	0.45

[1] For each PVC over 5, up to and including 14, add this rate to the monthly rate for 5 PVCs.

[2] For each PVC over 14, up to and including 24, add this rate to the total monthly rate for 14 PVCs.

[3] For each PVC over 24 add this rate to the total monthly rate for 24 PVCs. (M)

Certain material on this page formerly appeared on Page 8-163.
Certain material previously found on this page can now be found on Page 8-143.

8. ADVANCED COMMUNICATIONS NETWORKS

8.3 FRAME RELAY SERVICE (T)(M)

8.3.5 RATES AND CHARGES

C. 24 Months

4. Network-To-Network Information Transfer (NNIT) (Cont'd) (T)

	USOC	MONTHLY RATE	
• 336 or 384 kbps - NNIT, per Port			
- 1 PVC	17TA2	$159.40	(T)
- 2 PVCs	17TB2	167.60	
- 3 PVCs	17TC2	175.80	
- 4 PVCs	17TD2	184.00	
- 5 PVCs	17TE2	192.20	
- 6 PVCs through 14[1], per PVC	17TG2	3.30	
- 15 PVCs through 24[2], per PVC	17TH2	2.35	
- Each additional PVC over 24[3], per PVC	17TJ2	0.45	

[1] For each PVC over 5, up to and including 14, add this rate to the monthly rate for 5 PVCs.

[2] For each PVC over 14, up to and including 24, add this rate to the total monthly rate for 14 PVCs.

[3] For each PVC over 24 add this rate to the total monthly rate for 24 PVCs. (M)

Certain material on this page formerly appeared on Page 8-163.

Certain material previously found on this page can now be found on Pages 8-144 and 8-145.

8. ADVANCED COMMUNICATIONS NETWORKS

8.3 FRAME RELAY SERVICE (T)(M)

8.3.5 RATES AND CHARGES

C. 24 Months

4. Network-To-Network Information Transfer (NNIT) (Cont'd) (T)

	USOC	MONTHLY RATE
• 448 or 512 kbps - NNIT, per Port		
- 1 PVC	17TA2	$192.20
- 2 PVCs	17TB2	201.10
- 3 PVCs	17TC2	210.00
- 4 PVCs	17TD2	218.90
- 5 PVCs	17TE2	227.80
- 6 PVCs through 14[1], per PVC	17TG2	3.50
- 15 PVCs through 24[2], per PVC	17TH2	2.35
- Each additional PVC over 24[3], per PVC	17TJ2	0.45

[1] For each PVC over 5, up to and including 14, add this rate to the monthly rate for 5 PVCs.

[2] For each PVC over 14, up to and including 24, add this rate to the total monthly rate for 14 PVCs.

[3] For each PVC over 24 add this rate to the total monthly rate for 24 PVCs. (M)

Certain material on this page formerly appeared on Page 8-164.
Certain material previously found on this page can now be found on Page 8-146.

8. ADVANCED COMMUNICATIONS NETWORKS

8.3 FRAME RELAY SERVICE (T)(M)

8.3.5 RATES AND CHARGES

C. 24 Months

4. Network-To-Network Information Transfer (NNIT) (Cont'd) (T)

	USOC	MONTHLY RATE	
• 672 or 768 kbps - NNIT, per Port			
- 1 PVC	17TA2	$262.50	(T)
- 2 PVCs	17TB2	274.70	
- 3 PVCs	17TC2	286.90	
- 4 PVCs	17TD2	299.05	
- 5 PVCs	17TE2	311.25	
- 6 PVCs through 14[1], per PVC	17TG2	3.50	
- 15 PVCs through 24[2], per PVC	17TH2	2.35	
- Each additional PVC over 24[3], per PVC	17TJ2	0.45	

[1] For each PVC over 5, up to and including 14, add this rate to the monthly rate for 5 PVCs.

[2] For each PVC over 14, up to and including 24, add this rate to the total monthly rate for 14 PVCs.

[3] For each PVC over 24 add this rate to the total monthly rate for 24 PVCs. (M)

Certain material on this page formerly appeared on Page 8-164.
Certain material previously found on this page can now be found on Page 8-147.

8. ADVANCED COMMUNICATIONS NETWORKS

8.3 FRAME RELAY SERVICE (T)(M)

8.3.5 RATES AND CHARGES

C. 24 Months

4. Network-To-Network Information Transfer (NNIT) (Cont'd) (T)

	USOC	MONTHLY RATE
• 1.544 Mbps - NNIT, per Port		
- 1 PVC	17TA2	$ 196.90
- 2 PVCs	17TB2	231.55
- 3 PVCs	17TC2	266.25
- 4 PVCs	17TD2	300.95
- 5 PVCs	17TE2	335.65
- 6 PVCs through 14[1], per PVC	17TG2	17.80
- 15 PVCs through 24[2], per PVC	17TH2	4.70
- Each additional PVC over 24[3], per PVC	17TJ2	0.45

[1] For each PVC over 5, up to and including 14, add this rate to the monthly rate for 5 PVCs.

[2] For each PVC over 14, up to and including 24, add this rate to the total monthly rate for 14 PVCs.

[3] For each PVC over 24 add this rate to the total monthly rate for 24 PVCs. (M)

Certain material on this page formerly appeared on Page 8-165.
Certain material previously found on this page can now be found on Page 8-148.

8. ADVANCED COMMUNICATIONS NETWORKS

8.3 FRAME RELAY SERVICE (T)(M)

8.3.5 RATES AND CHARGES

C. 24 Months

4. Network-To-Network Information Transfer (NNIT) (Cont'd) (T)

	USOC	MONTHLY RATE	
• 44.736 Mbps - NNIT, per Port			
- 1 PVC	17TU2	$3,562.50	(T)
- 2 PVCs through 50[1], per PVC	17TV2	28.13	
- 51 PVCs through 140[2], per PVC	17TW2	7.50	
- 141 PVCs through 240[3], per PVC	17TY2	3.75	
- 241 PVCs through 500[4], per PVC	17TZ2	1.88	(T)

[1] For each PVC over 1, up to and including 50, add this rate to the monthly rate for 1 PVC. (T)

[2] For each PVC over 50, up to and including 140, add this rate to the total monthly rate for 50 PVCs. (T)

[3] For each PVC over 140, up to and including 240, add this rate to the total monthly rate for 140 PVCs. (T)

[4] For each PVC over 240, up to and including 500, add this rate to the total monthly rate for 240 PVCs. (T) (M)

Certain material on this page formerly appeared on Page 8-165.
Certain material previously found on this page can now be found on Pages 8-149 and 8-150.

8. ADVANCED COMMUNICATIONS NETWORKS

8.3 FRAME RELAY SERVICE
8.3.5 RATES AND CHARGES

C. 24 Months (Cont'd)

	USOC	NONRECURRING CHARGE	MONTHLY RATE
5. Central Office Connecting Channel			
• Per connection between a Multiplexer and FRS Port or between a Company facility port and an FRS Port			
- For speeds up to 1.544 Mbps	CU5TR	$25.00	$0.62
- For speeds up to 44.736 Mbps	CU5TR	50.00	9.38
6. Transport Channels	N/A	[1]	[1]

[1] See Section 7 and/or 17 for Transport Channel rates and regulations. (C)

8. ADVANCED COMMUNICATIONS NETWORKS

Certain material previously found on this page can now be found on Page 8-152.

8. ADVANCED COMMUNICATIONS NETWORKS

8.3 FRAME RELAY SERVICE (T)(M)
8.3.5 RATES AND CHARGES
C. 24 Months (Cont'd) (T)

	USOC	NONRECURRING CHARGE	MONTHLY RATE	
7. Optional Features and Functions				
• Customer Network Management (CNM)				
- Per workstation registered address initial setup	NM6X2	15.00	$62.81	(T)
- Subsequent CNM order charge, per workstation registered address change or addition of CNM to existing FRS[1]	NR9FM	38.00	–	(T)

[1] When adding CNM to existing FRS, the Subsequent CNM Order Charge applies in addition to the Nonrecurring Charge for the initial setup of CNM. (T) (M)

Certain material on this page formerly appeared on Page 8-166.
Certain material previously found on this page can now be found on Pages 8-153 and 8-154.

8. ADVANCED COMMUNICATIONS NETWORKS

8.3 FRAME RELAY SERVICE (S-y)

8.3.5 RATES AND CHARGES

C. 24 Months

7. Optional Features and Functions (Cont'd)

	USOC	NONRECURRING CHARGE	MONTHLY RATE	
• Priority UNIT PVC[1] (Grandfathered), per PVC				(S-y) (C-y)
- 56 or 64 kbps	PV7X2	$50.00	$4.69	(S-y)
- 112 or 128 kbps	PV7X2	50.00	5.47	
- 224 or 256 kbps	PV7X2	50.00	6.25	
- 336 or 384 kbps	PV7X2	50.00	7.03	
- 448 or 512 kbps	PV7X2	50.00	7.81	
- 672 or 768 kbps	PV7X2	50.00	8.60	
- 1.544 Mbps	PV7X2	50.00	9.38	
- 44.736 Mbps	PV7X2	50.00	9.38	

[1] Priority PVC rates and charges apply in addition to the UNIT PVC rates and charges set forth preceding. (S-y)

(y) Reissued matter filed under Transmittal No. 28, to become effective December 6, 2000.

(Filed under Transmittal 30.)

8. ADVANCED COMMUNICATIONS NETWORKS

8.3 FRAME RELAY SERVICE (S-y)
8.3.5 RATES AND CHARGES (Cont'd) (T-y)

(D-y)

(y) Reissued matter filed under Transmittal No. 28, to become effective December 6, 2000.

(Filed under Transmittal 30.)

8. ADVANCED COMMUNICATIONS NETWORKS

8.3 FRAME RELAY SERVICE
8.3.5 RATES AND CHARGES (Cont'd)

D. 36 Months

	USOC	NONRECURRING CHARGE	MONTHLY RATE	
1. Access Link, per Access Link				
• 56 or 64 kbps	L7AX3	$450.00	$ 65.00	
- Vintage				(T)
				(D)
12/14/96 through 12/13/01			43.50	(T)
• 2-Wire 128 kbps (Grandfathered)	L7TA3	450.00	38.25	
• 1.544 Mbps[1]	L7AX3	450.00	117.01	(T)
				(D)
2. Stand-Alone Access Link per Access Link				
• 56 or 64 kbps	NNLX3	450.00	65.00	
- Vintage				(T)
				(D)
12/14/96 through 12/13/01			43.50	(T)
• 1.544 Mbps[1]	NNLX3	450.00	117.01	(T)

(D)

[1] The nonrecurring charge will not apply to customers who qualify for the Volume NRC Waiver as set forth in 8.3.4.A., preceding. (T)

8. ADVANCED COMMUNICATIONS NETWORKS

8.3 FRAME RELAY SERVICE (S-y)

8.3.5 RATES AND CHARGES

D. 36 Months (Cont'd)

3. User-To-Network Information Transfer (UNIT)

	USOC	NONRECURRING CHARGE	
• 56 or 64 kbps			
- First PVC	NRBF1	$ 50.00	
- Each additional PVC	NRBF2	20.00	
- Subsequent PVC(s) order charge, per order[1]	NRBFO	75.00	(S-y)
• 2-Wire 128 kbps (Grandfathered)			(C-y)
- First PVC	NRBF7	300.00	(S-y)
- Each additional PVC	NRBF8	20.00	
- Subsequent PVC(s) order charge, per order[1]	NRBF9	75.00	
• 112 or 128 kbps (4-Wire), 224 or 256 kbps, 336 or 384 kbps, 448 or 512 kbps, and 672 or 768 kbps			
- First PVC	NRBF1	250.00	
- Each additional PVC	NRBF2	20.00	
- Subsequent PVC(s) order charge, per order[1]	NRBFO	75.00	

[1] When appropriate, the "Each additional PVC" nonrecurring charge applies in addition to the "Subsequent PVC order charge". (S-y)

(y) Reissued matter filed under Transmittal No. 28, to become effective December 6, 2000.

8. ADVANCED COMMUNICATIONS NETWORKS

8.3 FRAME RELAY SERVICE
8.3.5 RATES AND CHARGES

D. 36 Months

3. User-To-Network Information Transfer (UNIT) (Cont'd)

	USOC	NONRECURRING CHARGE	
• 1.544 Mbps			
- First PVC[2]	NRBF1	$ 50.00	(C)
- Each additional PVC[2]	NRBF2	20.00	(C)
- Subsequent PVC(s) order charge, per order[1]	NRBFO	75.00	
• 44.736 Mbps			
- First PVC[2]	NRBF1	250.00	(C)
- Each additional PVC[2]	NRBF2	50.00	(C)
- Subsequent PVC(s) order charge, per order[1]	NRBFO	75.00	
• Fault Tolerant Service (Grandfathered), per UNIT			
- Initial Service Establishment	NRBF4	500.00	
- Subsequent Service Establishment	NRBF5	50.00	
- Activation and Restoral	NRBF6	500.00	

[1] When appropriate, the "Each additional PVC" nonrecurring charge applies in addition to the "Subsequent PVC order charge".

[2] This nonrecurring charge will not apply to customers who qualify for the Volume NRC Waiver as set forth in 8.3.4.A., preceding. (N) (N)

8. ADVANCED COMMUNICATIONS NETWORKS

8.3 FRAME RELAY SERVICE
8.3.5 RATES AND CHARGES

D. 36 Months

3. User-To-Network Information Transfer (UNIT) (Cont'd)

	USOC	MONTHLY RATE	
• 56 or 64 kbps - UNIT, per Port			
- 0 PVCs, used with Fault Tolerant Service	17T93	$32.38	
- 1 PVC	17TA3	36.33	
- 2 PVCs	17TB3	41.19	
- 3 PVCs	17TC3	44.21	
- 4 PVCs	17TD3	47.23	
- 5 PVCs	17TE3	50.22	
- 6 PVCs through 14[1], per PVC	17TG3	1.15	(T) (D)
- 15 PVCs through 24[2], per PVC	17TH3	0.25	(T) (D)
- Each additional PVC over 24[3], per PVC	17TJ3	0.25	(T) (D)
• 2-Wire 128 kbps – UNIT (Grandfathered), per Port			
- 1 PVC	18TB3	80.75	
- 2 through 8 PVCs[4]	18TC3	7.06	(T)

[1] For each PVC over 5, up to and including 14, add this rate to the monthly rate for 5 PVCs. (D)

[2] For each PVC over 14, up to and including 24, add this rate to the total monthly rate for 14 PVCs. (T)

[3] For each PVC over 24 add this rate to the total monthly rate for 24 PVCs. (T)

[4] For each PVC over 1, up to and including 8, add this rate to the monthly rate for 1 PVCs. (T)

8. ADVANCED COMMUNICATIONS NETWORKS

8.3 FRAME RELAY SERVICE
8.3.5 RATES AND CHARGES

D. 36 Months

3. User-To-Network Information Transfer (UNIT) (Cont'd)

	USOC	MONTHLY RATE	
• 112 or 128 kbps (4-Wire)- UNIT, per Port			
- 1 PVC	17TA3	$111.00	(D)
- 2 PVCs	17TB3	113.80	(D)
- 3 PVCs	17TC3	116.55	(D)
- 4 PVCs	17TD3	119.35	(D)
- 5 PVCs	17TE3	122.10	(D)
- 6 PVCs through 14[1], per PVC	17TG3	1.10	(T)
- 15 PVCs through 24[2], per PVC	17TH3	0.80	(T)
- Each additional PVC over 24[3], per PVC	17TJ3	0.45	(D) (T) (D)

(D)

[1] For each PVC over 5, up to and including 14, add this rate to the monthly rate for 5 PVCs. (T)

[2] For each PVC over 14, up to and including 24, add this rate to the total monthly rate for 14 PVCs. (T)

[3] For each PVC over 24 add this rate to the total monthly rate for 24 PVCs. (T)

8. ADVANCED COMMUNICATIONS NETWORKS

8.3 FRAME RELAY SERVICE
8.3.5 RATES AND CHARGES

D. 36 Months

3. User-To-Network Information Transfer (UNIT) (Cont'd)

	USOC	MONTHLY RATE	
• 224 or 256 kbps - UNIT, per Port			
- 1 PVC	17TA3	$148.00	(D)
- 2 PVCs	17TB3	153.55	(D)
- 3 PVCs	17TC3	159.10	(D)
- 4 PVCs	17TD3	164.65	(D)
- 5 PVCs	17TE3	170.20	(D)
- 6 PVCs through 14[1], per PVC	17TG3	2.15	(T)
- 15 PVCs through 24[2], per PVC	17TH3	1.55	(T)
- Each additional PVC over 24[3],per PVC	17TJ3	0.45	(D) (T) (D)

(D)

[1] For each PVC over 5, up to and including 14, add this rate to the monthly rate for 5 PVCs. (T)

[2] For each PVC over 14, up to and including 24, add this rate to the total monthly rate for 14 PVCs. (T)

[3] For each PVC over 24 add this rate to the total monthly rate for 24 PVCs. (T)

8. ADVANCED COMMUNICATIONS NETWORKS

8.3 FRAME RELAY SERVICE
8.3.5 RATES AND CHARGES

D. 36 Months

3. User-To-Network Information Transfer (UNIT) (Cont'd)

	USOC	MONTHLY RATE	
• 336 or 384 kbps - UNIT, per Port			
- 1 PVC	17TA3	$185.00	(D)
- 2 PVCs	17TB3	193.10	(D)
- 3 PVCs	17TC3	201.20	(D)
- 4 PVCs	17TD3	209.30	(D)
- 5 PVCs	17TE3	217.40	(D)
- 6 PVCs through 14[1], per PVC	17TG3	3.25	(D) (T)
- 15 PVCs through 24[2], per PVC	17TH3	2.30	(T) (D)
- Each additional PVC over 24[3],per PVC	17TJ3	0.45	(T)

[1] For each PVC over 5, up to and including 14, add this rate to the monthly rate for 5 PVCs. (D) (T)

[2] For each PVC over 14, up to and including 24, add this rate to the total monthly rate for 14 PVCs. (T)

[3] For each PVC over 24 add this rate to the total monthly rate for 24 PVCs. (T)

8. ADVANCED COMMUNICATIONS NETWORKS

8.3 FRAME RELAY SERVICE
8.3.5 RATES AND CHARGES

D. 36 Months

3. User-To-Network Information Transfer (UNIT) (Cont'd)

	USOC	MONTHLY RATE	
• 448 or 512 kbps - UNIT, per Port			
- 1 PVC	17TA3	$217.40	(D)
- 2 PVCs	17TB3	226.15	(D)
- 3 PVCs	17TC3	234.95	(D)
- 4 PVCs	17TD3	243.75	(D)
- 5 PVCs	17TE3	252.55	(D)
- 6 PVCs through 14[1], per PVC	17TG3	3.45	(T)
- 15 PVCs through 24[2], per PVC	17TH3	2.30	(T)
- Each additional PVC over 24[3], per PVC	17TJ3	0.45	(D) (T)

[1] For each PVC over 5, up to and including 14, add this rate to the monthly rate for 5 PVCs. (T)

[2] For each PVC over 14, up to and including 24, add this rate to the total monthly rate for 14 PVCs. (T)

[3] For each PVC over 24 add this rate to the total monthly rate for 24 PVCs. (T)

8. ADVANCED COMMUNICATIONS NETWORKS

8.3 FRAME RELAY SERVICE
8.3.5 RATES AND CHARGES

D. 36 Months

3. User-To-Network Information Transfer (UNIT) (Cont'd)

	USOC	MONTHLY RATE	
• 672 or 768 kbps - UNIT, per Port			
- 1 PVC	17TA3	$286.75	(D)
- 2 PVCs	17TB3	299.70	(D)
- 3 PVCs	17TC3	312.65	(D)
- 4 PVCs	17TD3	325.60	(D)
- 5 PVCs	17TE3	338.55	(D)
- 6 PVCs through 14[1], per PVC	17TG3	3.70	(D) (T)
- 15 PVCs through 24[2], per PVC	17TH3	2.55	(T)
- Each additional PVC over 24[3], per PVC	17TJ3	0.80	(T)

(D)

[1] For each PVC over 5, up to and including 14, add this rate to the monthly rate for 5 PVCs. (T)

[2] For each PVC over 14, up to and including 24, add this rate to the total monthly rate for 14 PVCs. (T)

[3] For each PVC over 24 add this rate to the total monthly rate for 24 PVCs. (T)

8. ADVANCED COMMUNICATIONS NETWORKS

8.3 FRAME RELAY SERVICE
8.3.5 RATES AND CHARGES

D. 36 Months

3. User-To-Network Information Transfer (UNIT) (Cont'd)

	USOC	MONTHLY RATE	
• 1.544 Mbps - UNIT, per Port			
- 0 PVCs, used with Fault Tolerant Service	17T93	$198.88	
- 1 PVC	17TA3	222.00	(D)
- 2 PVCs	17TB3	256.25	(D)
- 3 PVCs	17TC3	290.45	(D)
- 4 PVCs	17TD3	324.70	(D)
- 5 PVCs	17TE3	358.90	(D)
- 6 PVCs through 14[1], per PVC	17TG3	17.60	(D) (T)
- 15 PVCs through 24[2], per PVC	17TH3	4.65	(D) (T)
- Each additional PVC over 24[3],per PVC	17TJ3	0.45	(D) (T)

[1] For each PVC over 5, up to and including 14, add this rate to the monthly rate for 5 PVCs. (D) (T)

[2] For each PVC over 14, up to and including 24, add this rate to the total monthly rate for 14 PVCs. (D) (T)

[3] For each PVC over 24 add this rate to the total monthly rate for 24 PVCs. (T)

8. ADVANCED COMMUNICATIONS NETWORKS

8.3 FRAME RELAY SERVICE (T)(M)

8.3.5 RATES AND CHARGES

D. 36 Months

3. User-To-Network Information Transfer (UNIT) (Cont'd) (T)

	USOC	MONTHLY RATE
• 44.736 Mbps - UNIT, per Port		
- 0 PVCs, used with Fault Tolerant Service	17T93	$3,237.50
- 1 PVC	17TU3	3,515.00
- 2 PVCs through 50[1], per PVC	17TV3	27.75
- 51 PVCs through 140[2], per PVC	17TW3	7.40
- 141 PVCs through 240[3], per PVC	17TY3	3.70
- 241 PVCs through 500[4], per PVC	17TZ3	1.85

[1] For each PVC over 1, up to and including 50, add this rate to the monthly rate for 1 PVC.
[2] For each PVC over 50, up to and including 140, add this rate to the total monthly rate for 50 PVCs.
[3] For each PVC over 140, up to and including 240, add this rate to the total monthly rate for 140 PVCs.
[4] For each PVC over 240, up to and including 500, add this rate to the total monthly rate for 240 PVCs. (M)

Certain material on this page formerly appeared on Page 8-176.
Certain material previously found on this page can now be found on Page 8-174.

8. ADVANCED COMMUNICATIONS NETWORKS

8.3 FRAME RELAY SERVICE (T)(M)
8.3.5 RATES AND CHARGES (T)

D. 36 Months (Cont'd)

4. Network-To-Network Information Transfer (NNIT)

	USOC	NONRECURRING CHARGE
• 56 or 64 kbps		
- First PVC	NRBF1	$ 50.00
- Each additional PVC	NRBF2	20.00
- Subsequent PVC(s) order charge, per order[1]	NRBFO	75.00
• 112 or 128 kbps, 224 or 256 kbps, 336 or 384 kbps, 448 or 512 kbps, and 672 or 768 kbps		
- First PVC	NRBF1	250.00
- Each additional PVC	NRBF2	20.00
- Subsequent PVC(s) order charge, per order[1]	NRBFO	75.00
• 1.544 Mbps		
- First PVC	NRBF1	50.00
- Each additional PVC	NRBF2	20.00
- Subsequent PVC(s) order charge, per order[1]	NRBFO	75.00

[1] When appropriate, the "Each additional PVC" nonrecurring charge applies in addition to the "Subsequent PVC order charge". (M)

Certain material on this page formerly appeared on Page 8-177.
Certain material previously found on this page can now be found on Page 8-175.

8. ADVANCED COMMUNICATIONS NETWORKS

8.3 FRAME RELAY SERVICE (T)(M)

8.3.5 RATES AND CHARGES

D. 36 Months

4. Network-To-Network Information Transfer (NNIT) (Cont'd) (T)

	USOC	NONRECURRING CHARGE
• 44.736 Mbps		
- First PVC	NRBF1	$250.00
- Each additional PVC	NRBF2	50.00
- Subsequent PVC(s) order charge, per order[1]	NRBFO	75.00

[1] When appropriate, the "Each additional PVC" nonrecurring charge applies in addition to the "Subsequent PVC order charge". (M)

Certain material on this page formerly appeared on Page 8-177.1.
Certain material previously found on this page can now be found on Page 8-176.

8. ADVANCED COMMUNICATIONS NETWORKS

Certain material previously found on this page can now be found on Page 8-177.

8. ADVANCED COMMUNICATIONS NETWORKS

8.3 FRAME RELAY SERVICE
8.3.5 RATES AND CHARGES

D. 36 Months

4. Network-To-Network Information Transfer (NNIT) (Cont'd)

	USOC	MONTHLY RATE	
• 56 or 64 kbps - NNIT, per Port			
- 1 PVC	17TA3	$35.15	(D)
- 2 PVCs	17TB3	39.15	(D)
- 3 PVCs	17TC3	43.20	(D)
- 4 PVCs	17TD3	47.20	(D)
- 5 PVCs	17TE3	51.25	(D)
- 6 PVCs through 14[1], per PVC	17TG3	0.45	(T)
- 15 PVCs through 24[2], per PVC	17TH3	0.30	(T)
- Each additional PVC over 24[3],per PVC	17TJ3	0.25	(D) (T) (D)

(D)

[1] For each PVC over 5, up to and including 14, add this rate to the monthly rate for 5 PVCs. (T)

[2] For each PVC over 14, up to and including 24, add this rate to the total monthly rate for 14 PVCs. (T)

[3] For each PVC over 24 add this rate to the total monthly rate for 24 PVCs. (T)

8. ADVANCED COMMUNICATIONS NETWORKS

8.3 FRAME RELAY SERVICE
8.3.5 RATES AND CHARGES

D. 36 Months

4. Network-To-Network Information Transfer (NNIT) (Cont'd)

	USOC	MONTHLY RATE	
• 112 or 128 kbps - NNIT, per Port			
- 1 PVC	17TA3	$78.65	(D)
- 2 PVCs	17TB3	81.40	(D)
- 3 PVCs	17TC3	84.20	(D)
- 4 PVCs	17TD3	86.95	(D)
- 5 PVCs	17TE3	89.75	(D)
- 6 PVCs through 14[1], per PVC	17TG3	1.10	(T)
- 15 PVCs through 24[2], per PVC	17TH3	0.80	(T)
- Each additional PVC over 24[3],per PVC	17TJ3	0.45	(D) (T) (D)

[1] For each PVC over 5, up to and including 14, add this rate to the monthly rate for 5 PVCs. (T)

[2] For each PVC over 14, up to and including 24, add this rate to the total monthly rate for 14 PVCs. (T)

[3] For each PVC over 24 add this rate to the total monthly rate for 24 PVCs. (T)

8. ADVANCED COMMUNICATIONS NETWORKS

8.3 FRAME RELAY SERVICE
8.3.5 RATES AND CHARGES

D. 36 Months

4. Network-To-Network Information Transfer (NNIT) (Cont'd)

	USOC	MONTHLY RATE	
• 224 or 256 kbps - NNIT, per Port			
- 1 PVC	17TA3	$115.65	(D)
- 2 PVCs	17TB3	121.20	(D)
- 3 PVCs	17TC3	126.75	(D)
- 4 PVCs	17TD3	132.30	(D)
- 5 PVCs	17TE3	137.85	(D)
- 6 PVCs through 14[1], per PVC	17TG3	2.15	(T)
- 15 PVCs through 24[2], per PVC	17TH3	1.55	(T)
- Each additional PVC over 24[3], per PVC	17TJ3	0.45	(D) (T) (D)

(D)

[1] For each PVC over 5, up to and including 14, add this rate to the monthly rate for 5 PVCs. (T)

[2] For each PVC over 14, up to and including 24, add this rate to the total monthly rate for 14 PVCs. (T)

[3] For each PVC over 24 add this rate to the total monthly rate for 24 PVCs. (T)

8. ADVANCED COMMUNICATIONS NETWORKS

8.3 FRAME RELAY SERVICE
8.3.5 RATES AND CHARGES

D. 36 Months

4. Network-To-Network Information Transfer (NNIT) (Cont'd)

	USOC	MONTHLY RATE	
• 336 or 384 kbps - NNIT, per Port			
- 1 PVC	17TA3	$157.25	(D)
- 2 PVCs	17TB3	165.35	(D)
- 3 PVCs	17TC3	173.45	(D)
- 4 PVCs	17TD3	181.55	(D)
- 5 PVCs	17TE3	189.65	(D)
- 6 PVCs through 14[1], per PVC	17TG3	3.25	(T)
- 15 PVCs through 24[2], per PVC	17TH3	2.30	(T)
- Each additional PVC over 24[3], per PVC	17TJ3	0.45	(D) (T) (D)

(D)

[1] For each PVC over 5, up to and including 14, add this rate to the monthly rate for 5 PVCs. (T)

[2] For each PVC over 14, up to and including 24, add this rate to the total monthly rate for 14 PVCs. (T)

[3] For each PVC over 24 add this rate to the total monthly rate for 24 PVCs. (T)

8. ADVANCED COMMUNICATIONS NETWORKS

Certain material previously found on this page can now be found on Page 8-185.

8. ADVANCED COMMUNICATIONS NETWORKS

8.3 FRAME RELAY SERVICE
8.3.5 RATES AND CHARGES

D. 36 Months

4. Network-To-Network Information Transfer (NNIT) (Cont'd)

	USOC	MONTHLY RATE	
• 448 or 512 kbps - NNIT, per Port			
- 1 PVC	17TA3	$189.65	(D)
- 2 PVCs	17TB3	198.40	(D)
- 3 PVCs	17TC3	207.20	(D)
- 4 PVCs	17TD3	216.00	(D)
- 5 PVCs	17TE3	224.80	(D)
- 6 PVCs through 14[1], per PVC	17TG3	3.45	(T)
- 15 PVCs through 24[2], per PVC	17TH3	2.30	(T)
- Each additional PVC over 24[3], per PVC	17TJ3	0.45	(T)

(D)

(D)

[1] For each PVC over 5, up to and including 14, add this rate to the monthly rate for 5 PVCs. (T)

[2] For each PVC over 14, up to and including 24, add this rate to the total monthly rate for 14 PVCs. (T)

[3] For each PVC over 24 add this rate to the total monthly rate for 24 PVCs. (T)

8. ADVANCED COMMUNICATIONS NETWORKS

8.3 FRAME RELAY SERVICE
8.3.5 RATES AND CHARGES

D. 36 Months

4. Network-To-Network Information Transfer (NNIT) (Cont'd)

	USOC	MONTHLY RATE	
• 672 or 768 kbps - NNIT, per Port			
- 1 PVC	17TA3	$259.00	(D)
- 2 PVCs	17TB3	271.05	(D)
- 3 PVCs	17TC3	283.05	(D)
- 4 PVCs	17TD3	295.10	(D)
- 5 PVCs	17TE3	307.10	(D)
- 6 PVCs through 14[1], per PVC	17TG3	3.45	(D) (T)
- 15 PVCs through 24[2], per PVC	17TH3	2.30	(T)
- Each additional PVC over 24[3], per PVC	17TJ3	0.45	(T)

[1] For each PVC over 5, up to and including 14, add this rate to the monthly rate for 5 PVCs. (D) (T)

[2] For each PVC over 14, up to and including 24, add this rate to the total monthly rate for 14 PVCs. (T)

[3] For each PVC over 24 add this rate to the total monthly rate for 24 PVCs. (T)

8. ADVANCED COMMUNICATIONS NETWORKS

8.3 FRAME RELAY SERVICE
8.3.5 RATES AND CHARGES

D. 36 Months

4. Network-To-Network Information Transfer (NNIT) (Cont'd)

	USOC	MONTHLY RATE	
• 1.544 Mbps - NNIT, per Port			
- 1 PVC	17TA3	$194.25	(D)
- 2 PVCs	17TB3	228.50	(D)
- 3 PVCs	17TC3	262.70	(D)
- 4 PVCs	17TD3	296.95	(D)
- 5 PVCs	17TE3	331.15	(D)
- 6 PVCs through 14[1], per PVC	17TG3	17.60	(T)
- 15 PVCs through 24[2], per PVC	17TH3	4.65	(T)
- Each additional PVC over 24[3], per PVC	17TJ3	0.45	(D)

(D)

[1] For each PVC over 5, up to and including 14, add this rate to the monthly rate for 5 PVCs. (T)

[2] For each PVC over 14, up to and including 24, add this rate to the total monthly rate for 14 PVCs. (T)

[3] For each PVC over 24 add this rate to the total monthly rate for 24 PVCs. (T)

8. ADVANCED COMMUNICATIONS NETWORKS

8.3 FRAME RELAY SERVICE (T)(M)

8.3.5 RATES AND CHARGES

D. 36 Months

4. Network-To-Network Information Transfer (NNIT) (Cont'd) (T)

	USOC	MONTHLY RATE
• 44.736 Mbps - NNIT, per Port		
- 1 PVC	17TU3	$3,515.00
- 2 PVCs through 50[1], per PVC	17TV3	27.75
- 51 PVCs through 140[2], per PVC	17TW3	7.40
- 141 PVCs through 240[3], per PVC	17TY3	3.70
- 241 PVCs through 500[4], per PVC	17TZ3	1.85

[1] For each PVC over 1, up to and including 50, add this rate to the monthly rate for 1 PVC.

[2] For each PVC over 50, up to and including 140, add this rate to the total monthly rate for 50 PVCs.

[3] For each PVC over 140, up to and including 240, add this rate to the total monthly rate for 140 PVCs.

[4] For each PVC over 240, up to and including 500, add this rate to the total monthly rate for 240 PVCs. (M)

Certain material on this page formerly appeared on Page 8-181.1.
Certain material previously found on this page can now be found on Pages 8-189 and 8-190.

8. ADVANCED COMMUNICATIONS NETWORKS

8.3 FRAME RELAY SERVICE
8.3.5 RATES AND CHARGES

D. 36 Months (Cont'd)

	USOC	NONRECURRING CHARGE	MONTHLY RATE
5. Central Office Connecting Channel			
• Per connection between a Multiplexer and FRS Port or between a Company facility port and an FRS Port			
- For speeds up to 1.544 Mbps	CU5UR	$25.00	$ 0.60
- For speeds up to 44.736 Mbps	CU5UR	50.00	9.25
6. Transport Channels	N/A	[1]	[1]
7. Optional Features and Functions			
• Customer Network Management (CNM)			
- Per workstation registered address initial setup	NM6X3	15.00	61.98
- Subsequent CNM order charge, per workstation registered address change or addition of CNM to existing FRS[2]	NR9FM	38.00	–

[1] See Section 7 and/or 17 for Transport Channel rates and regulations. (C)

[2] When adding CNM to existing FRS, the Subsequent CNM Order Charge applies in addition to the Nonrecurring Charge for the initial setup of CNM.

8. ADVANCED COMMUNICATIONS NETWORKS

8.3 FRAME RELAY SERVICE (S-y)

8.3.5 RATES AND CHARGES

D. 36 Months

7. Optional Features and Functions (Cont'd)

	USOC	NONRECURRING CHARGE	MONTHLY RATE	
• Priority UNIT PVC[1] (Grandfathered), per PVC				(S-y) (C-y)
- 56 or 64 kbps	PV7X3	$50.00	$4.63	(S-y)
- 112 or 128 kbps	PV7X3	50.00	5.39	
- 224 or 256 kbps	PV7X3	50.00	6.17	
- 336 or 384 kbps	PV7X3	50.00	6.94	
- 448 or 512 kbps	PV7X3	50.00	7.71	
- 672 or 768 kbps	PV7X3	50.00	8.48	
- 1.544 Mbps	PV7X3	50.00	9.25	
- 44.736 Mbps	PV7X3	50.00	9.25	

[1] Priority PVC rates and charges apply in addition to the UNIT PVC rates and charges set forth preceding. (S-y)

(y) Reissued matter filed under Transmittal No. 28, to become effective December 6, 2000.

(Filed under Transmittal 30.)

8. ADVANCED COMMUNICATIONS NETWORKS

8.3 FRAME RELAY SERVICE (S-y)
8.3.5 RATES AND CHARGES (Cont'd) (T-y)

(D-y)

(y) Reissued matter filed under Transmittal No. 28, to become effective December 6, 2000.

(Filed under Transmittal 30.)

8. ADVANCED COMMUNICATIONS NETWORKS

8.3 FRAME RELAY SERVICE
8.3.5 RATES AND CHARGES (Cont'd)

E. 48 Months

	USOC	NONRECURRING CHARGE	MONTHLY RATE	
1. Access Link, per Access Link				
• 56 or 64 kbps	L7AX4	$450.00	$ 65.00	
- Vintage				(T)
				(D)
12/14/96 through 12/13/01			42.90	(T)
• 1.544 Mbps[1]	L7AX4	450.00	115.43	(T)
				(D)
2. Stand-Alone Access Link, per Access Link				
• 56 or 64 kbps	NNLX4	450.00	65.00	
- Vintage				(T)
				(D)
12/14/96 through 12/13/01			42.90	(T)
• 1.544 Mbps[1]	NNLX4	450.00	115.43	(T)

(D)

[1] The nonrecurring charge will not apply to customers who qualify for the Volume NRC Waiver as set forth in 8.3.4.A., preceding. (T)

8. ADVANCED COMMUNICATIONS NETWORKS

8.3 FRAME RELAY SERVICE (T)(M)
8.3.5 RATES AND CHARGES
E. 48 Months (Cont'd) (T)

3. User-To-Network Information Transfer (UNIT)

	USOC	NONRECURRING CHARGE	
• 56 or 64 kbps			
- First PVC	NRBF1	$50.00	
- Each additional PVC	NRBF2	20.00	
- Subsequent PVC(s) order charge, per order[1]	NRBFO	75.00	(T)
• 112 or 128 kbps, 224 or 256 kbps, 336 or 384 kbps, 448 or 512 kbps, and 672 or 768 kbps			
- First PVC	NRBF1	250.00	
- Each additional PVC	NRBF2	20.00	
- Subsequent PVC(s) order charge, per order[1]	NRBFO	75.00	

[1] When appropriate, the "Each additional PVC" nonrecurring charge applies in addition to the "Subsequent PVC order charge". (M)

Certain material on this page formerly appeared on Pages 8-185 and 8-186.
Certain material previously found on this page can now be found on Pages 8-198 and 8-199.

8. ADVANCED COMMUNICATIONS NETWORKS

8.3 FRAME RELAY SERVICE
8.3.5 RATES AND CHARGES

E. 48 Months

3. User-To-Network Information Transfer (UNIT) (Cont'd)

	USOC	NONRECURRING CHARGE	
• 1.544 Mbps			
- First PVC[2]	NRBF1	$ 50.00	(C)
- Each additional PVC[2]	NRBF2	20.00	(C)
- Subsequent PVC(s) order charge, per order[1]	NRBFO	75.00	
• 44.736 Mbps			
- First PVC[2]	NRBF1	250.00	(C)
- Each additional PVC[2]	NRBF2	50.00	(C)
- Subsequent PVC(s) order charge, per order[1]	NRBFO	75.00	
• Fault Tolerant Service (Grandfathered), per UNIT			
- Initial Service Establishment	NRBF4	500.00	
- Subsequent Service Establishment	NRBF5	50.00	
- Activation and Restoral	NRBF6	500.00	

[1] When appropriate, the "Each additional PVC" nonrecurring charge applies in addition to the "Subsequent PVC order charge".

[2] This nonrecurring charge will not apply to customers who qualify for the Volume NRC Waiver as set forth in 8.3.4.A., preceding. (N) (N)

8. ADVANCED COMMUNICATIONS NETWORKS

Certain material previously found on this page can now be found on Page 8-201.

8. ADVANCED COMMUNICATIONS NETWORKS

8.3 FRAME RELAY SERVICE
8.3.5 RATES AND CHARGES

E. 48 Months

3. User-To-Network Information Transfer (UNIT) (Cont'd)

	USOC	MONTHLY RATE	
• 56 or 64 kbps - UNIT, per Port			
- 0 PVCs, used with Fault Tolerant Service	17T94	$31.94	
- 1 PVC	17TA4	35.84	
- 2 PVCs	17TB4	40.63	
- 3 PVCs	17TC4	43.61	
- 4 PVCs	17TD4	46.59	
- 5 PVCs	17TE4	49.54	
- 6 PVCs through 14[1], per PVC	17TG4	1.13	(T) (D)
- 15 PVCs through 24[2], per PVC	17TH4	0.25	(T) (D)
- Each additional PVC over 24[3], per PVC	17TJ4	0.25	(T) (D)

[1] For each PVC over 5, up to and including 14, add this rate to the monthly rate for 5 PVCs. (D)

[2] For each PVC over 14, up to and including 24, add this rate to the total monthly rate for 14 PVCs. (T)

[3] For each PVC over 24 add this rate to the total monthly rate for 24 PVCs. (T) (D)

8. ADVANCED COMMUNICATIONS NETWORKS

8.3 FRAME RELAY SERVICE
8.3.5 RATES AND CHARGES

E. 48 Months

3. User-To-Network Information Transfer (UNIT) (Cont'd)

	USOC	MONTHLY RATE	
• 112 or 128 kbps - UNIT, per Port			
- 1 PVC	17TA4	$109.50	(D)
- 2 PVCs	17TB4	112.25	(D)
- 3 PVCs	17TC4	115.00	(D)
- 4 PVCs	17TD4	117.70	(D)
- 5 PVCs	17TE4	120.45	(D)
- 6 PVCs through 14[1], per PVC	17TG4	1.10	(T)
- 15 PVCs through 24[2], per PVC	17TH4	0.80	(T)
- Each additional PVC over 24[3], per PVC	17TJ4	0.45	(T)

(D)

[1] For each PVC over 5, up to and including 14, add this rate to the monthly rate for 5 PVCs. (T)

[2] For each PVC over 14, up to and including 24, add this rate to the total monthly rate for 14 PVCs. (T)

[3] For each PVC over 24 add this rate to the total monthly rate for 24 PVCs. (T)

8. ADVANCED COMMUNICATIONS NETWORKS

8.3 FRAME RELAY SERVICE (T)(M)

8.3.5 RATES AND CHARGES

E. 48 Months

3. User-To-Network Information Transfer (UNIT) (Cont'd) (T)

	USOC	MONTHLY RATE
• 224 or 256 kbps - UNIT, per Port		
- 1 PVC	17TA4	$146.00
- 2 PVCs	17TB4	151.50
- 3 PVCs	17TC4	156.95
- 4 PVCs	17TD4	162.45
- 5 PVCs	17TE4	167.90
- 6 PVCs through 14[1], per PVC	17TG4	2.15
- 15 PVCs through 24[2], per PVC	17TH4	1.50
- Each additional PVC over 24[3], per PVC	17TJ4	0.45

[1] For each PVC over 5, up to and including 14, add this rate to the monthly rate for 5 PVCs.

[2] For each PVC over 14, up to and including 24, add this rate to the total monthly rate for 14 PVCs.

[3] For each PVC over 24 add this rate to the total monthly rate for 24 PVCs. (M)

Certain material on this page formerly appeared on Page 8-188.
Certain material previously found on this page can now be found on Pages 8-206 and 8-207.

8. ADVANCED COMMUNICATIONS NETWORKS

8.3 FRAME RELAY SERVICE (T)(M)

8.3.5 RATES AND CHARGES

E. 48 Months

3. User-To-Network Information Transfer (UNIT) (Cont'd) (T)

	USOC	MONTHLY RATE	
• 336 or 384 kbps - UNIT, per Port			
- 1 PVC	17TA4	$182.50	(T)
- 2 PVCs	17TB4	190.50	
- 3 PVCs	17TC4	198.45	
- 4 PVCs	17TD4	206.45	
- 5 PVCs	17TE4	214.45	
- 6 PVCs through 14[1], per PVC	17TG4	3.20	
- 15 PVCs through 24[2], per PVC	17TH4	2.30	
- Each additional PVC over 24[3], per PVC	17TJ4	0.45	

[1] For each PVC over 5, up to and including 14, add this rate to the monthly rate for 5 PVCs.

[2] For each PVC over 14, up to and including 24, add this rate to the total monthly rate for 14 PVCs.

[3] For each PVC over 24 add this rate to the total monthly rate for 24 PVCs. (M)

Certain material on this page formerly appeared on Page 8-188.
Certain material previously found on this page can now be found on Page 8-208.

8. ADVANCED COMMUNICATIONS NETWORKS

Certain material previously found on this page can now be found on Page 8-209.

8. ADVANCED COMMUNICATIONS NETWORKS

8.3 FRAME RELAY SERVICE
8.3.5 RATES AND CHARGES

E. 48 Months

3. User-To-Network Information Transfer (UNIT) (Cont'd)

	USOC	MONTHLY RATE	
• 448 or 512 kbps - UNIT, per Port			
- 1 PVC	17TA4	$214.45	(D)
- 2 PVCs	17TB4	223.10	(D)
- 3 PVCs	17TC4	231.80	(D)
- 4 PVCs	17TD4	240.45	(D)
- 5 PVCs	17TE4	249.10	(D)
- 6 PVCs through 14[1], per PVC	17TG4	3.40	(T)
- 15 PVCs through 24[2], per PVC	17TH4	2.30	(T)
- Each additional PVC over 24[3], per PVC	17TJ4	0.45	(D) (T)

[1] For each PVC over 5, up to and including 14, add this rate to the monthly rate for 5 PVCs. (T)

[2] For each PVC over 14, up to and including 24, add this rate to the total monthly rate for 14 PVCs. (T)

[3] For each PVC over 24 add this rate to the total monthly rate for 24 PVCs. (T)

8. ADVANCED COMMUNICATIONS NETWORKS

8.3 FRAME RELAY SERVICE
8.3.5 RATES AND CHARGES

E. 48 Months

3. User-To-Network Information Transfer (UNIT) (Cont'd)

	USOC	MONTHLY RATE	
• 672 or 768 kbps - UNIT, per Port			
- 1 PVC	17TA4	$282.90	(D)
- 2 PVCs	17TB4	295.65	(D)
- 3 PVCs	17TC4	308.45	(D)
- 4 PVCs	17TD4	321.20	(D)
- 5 PVCs	17TE4	334.00	(D)
- 6 PVCs through 14[1], per PVC	17TG4	3.65	(D) (T)
- 15 PVCs through 24[2], per PVC	17TH4	2.50	(T)
- Each additional PVC over 24[3], per PVC	17TJ4	0.80	(T)

(D)

[1] For each PVC over 5, up to and including 14, add this rate to the monthly rate for 5 PVCs. (T)

[2] For each PVC over 14, up to and including 24, add this rate to the total monthly rate for 14 PVCs. (T)

[3] For each PVC over 24 add this rate to the total monthly rate for 24 PVCs. (T)

8. ADVANCED COMMUNICATIONS NETWORKS

8.3 FRAME RELAY SERVICE
8.3.5 RATES AND CHARGES

E. 48 Months

3. User-To-Network Information Transfer (UNIT) (Cont'd)

	USOC	MONTHLY RATE	
• 1.544 Mbps - UNIT, per Port			
- 0 PVCs, used with Fault Tolerant Service	17T94	$196.19	
- 1 PVC	17TA4	219.00	(D)
- 2 PVCs	17TB4	252.75	(D)
- 3 PVCs	17TC4	286.55	(D)
- 4 PVCs	17TD4	320.30	(D)
- 5 PVCs	17TE4	354.05	(D)
6 PVCs through 14[1], per PVC	17TG4	17.35	(D) (T)
- 15 PVCs through 24[2], per PVC	17TH4	4.55	(T)
- Each additional PVC over 24[3], per PVC	17TJ4	0.45	(T) (D)

(D)

[1] For each PVC over 5, up to and including 14, add this rate to the monthly rate for 5 PVCs. (T)

[2] For each PVC over 14, up to and including 24, add this rate to the total monthly rate for 14 PVCs. (T)

[3] For each PVC over 24 add this rate to the total monthly rate for 24 PVCs. (T)

8. ADVANCED COMMUNICATIONS NETWORKS

8.3 FRAME RELAY SERVICE (T)(M)

8.3.5 RATES AND CHARGES

E. 48 Months

3. User-To-Network Information Transfer (UNIT) (Cont'd) (T)

	USOC	MONTHLY RATE	
• 44.736 Mbps - UNIT, per Port			
- 0 PVCs, used with Fault Tolerant Service	17T94	$3,193.75	(T)
- 1 PVC	17TU4	3,467.50	
- 2 PVCs through 50[1], per PVC	17TV4	27.38	(T)
- 51 PVCs through 140[2], per PVC	17TW4	7.30	
- 141 PVCs through 240[3], per PVC	17TY4	3.65	
- 241 PVCs through 500[4], per PVC	17TZ4	1.83	(T)

[1] For each PVC over 1, up to and including 50, add this rate to the monthly rate for 1 PVC. (T)

[2] For each PVC over 50, up to and including 140, add this rate to the total monthly rate for 50 PVCs. (T)

[3] For each PVC over 140, up to and including 240, add this rate to the total monthly rate for 140 PVCs. (T)

[4] For each PVC over 240, up to and including 500, add this rate to the total monthly rate for 240 PVCs. (T) (M)

Certain material on this page formerly appeared on Page 8-190.
Certain material previously found on this page can now be found on Pages 8-213 and 8-214.

8. ADVANCED COMMUNICATIONS NETWORKS

8.3 FRAME RELAY SERVICE (T)(M)
8.3.5 RATES AND CHARGES (T)

E. 48 Months (Cont'd)

4. Network-To-Network Information Transfer (NNIT)

	USOC	NONRECURRING CHARGE
• 56 or 64 kbps		
- First PVC	NRBF1	$ 50.00
- Each additional PVC	NRBF2	20.00
- Subsequent PVC(s) order charge, per order[1]	NRBFO	75.00
• 112 or 128 kbps, 224 or 256 kbps, 336 or 384 kbps, 448 or 512 kbps, and 672 or 768 kbps		
- First PVC	NRBF1	250.00
- Each additional PVC	NRBF2	20.00
- Subsequent PVC(s) order charge, per order[1]	NRBFO	75.00
• 1.544 Mbps		
- First PVC	NRBF1	50.00
- Each additional PVC	NRBF2	20.00
- Subsequent PVC(s) order charge, per order[1]	NRBFO	75.00

[1] When appropriate, the "Each additional PVC" nonrecurring charge applies in addition to the "Subsequent PVC order charge". (M)

Certain material on this page formerly appeared on Page 8-191.
Certain material previously found on this page can now be found on Pages 8-215 and 8-216.

8. ADVANCED COMMUNICATIONS NETWORKS

8.3 FRAME RELAY SERVICE (T)(M)

8.3.5 RATES AND CHARGES

E. 48 Months

4. Network-To-Network Information Transfer (NNIT) (Cont'd) (T)

	USOC	NONRECURRING CHARGE
• 44.736 Mbps		
- First PVC	NRBF1	$250.00
- Each additional PVC	NRBF2	50.00
- Subsequent PVC(s) order charge, per order[1]	NRBFO	75.00

[1] When appropriate, the "Each additional PVC" nonrecurring charge applies in addition to the "Subsequent PVC order charge". (M)

Certain material on this page formerly appeared on Page 8-191.1.
Certain material previously found on this page can now be found on Page 8-217.

8. ADVANCED COMMUNICATIONS NETWORKS

8.3 FRAME RELAY SERVICE
8.3.5 RATES AND CHARGES

E. 48 Months

4. Network-To-Network Information Transfer (NNIT) (Cont'd)

	USOC	MONTHLY RATE	
• 56 or 64 kbps - NNIT, per Port			
- 1 PVC	17TA4	$34.70	(D)
- 2 PVCs	17TB4	38.65	(D)
- 3 PVCs	17TC4	42.60	(D)
- 4 PVCs	17TD4	46.60	(D)
- 5 PVCs	17TE4	50.55	(D)
- 6 PVCs through 14[1], per PVC	17TG4	0.45	(T)
- 15 PVCs through 24[2], per PVC	17TH4	0.25	(T)
- Each additional PVC over 24[3], per PVC	17TJ4	0.25	(T)

(D)

[1] For each PVC over 5, up to and including 14, add this rate to the monthly rate for 5 PVCs. (T)

[2] For each PVC over 14, up to and including 24, add this rate to the total monthly rate for 14 PVCs. (T)

[3] For each PVC over 24 add this rate to the total monthly rate for 24 PVCs. (T)

8. ADVANCED COMMUNICATIONS NETWORKS

8.3 FRAME RELAY SERVICE
8.3.5 RATES AND CHARGES

E. 48 Months

4. Network-To-Network Information Transfer (NNIT) (Cont'd)

	USOC	MONTHLY RATE	
• 112 or 128 kbps - NNIT, per Port			
- 1 PVC	17TA4	$77.55	(D)
- 2 PVCs	17TB4	80.30	(D)
- 3 PVCs	17TC4	83.05	(D)
- 4 PVCs	17TD4	85.80	(D)
- 5 PVCs	17TE4	88.50	(D)
- 6 PVCs through 14[1], per PVC	17TG4	1.10	(T)
- 15 PVCs through 24[2], per PVC	17TH4	0.80	(T)
- Each additional PVC over 24[3], per PVC	17TJ4	0.45	(D) (T) (D)

(D)

[1] For each PVC over 5, up to and including 14, add this rate to the monthly rate for 5 PVCs. (T)

[2] For each PVC over 14, up to and including 24, add this rate to the total monthly rate for 14 PVCs. (T)

[3] For each PVC over 24 add this rate to the total monthly rate for 24 PVCs. (T)

8. ADVANCED COMMUNICATIONS NETWORKS

8.3 FRAME RELAY SERVICE
8.3.5 RATES AND CHARGES

E. 48 Months

4. Network-To-Network Information Transfer (NNIT) (Cont'd)

	USOC	MONTHLY RATE	
• 224 or 256 kbps - NNIT, per Port			
- 1 PVC	17TA4	$114.05	(D)
- 2 PVCs	17TB4	119.55	(D)
- 3 PVCs	17TC4	125.00	(D)
- 4 PVCs	17TD4	130.50	(D)
- 5 PVCs	17TE4	135.95	(D)
- 6 PVCs through 14[1], per PVC	17TG4	2.15	(T)
- 15 PVCs through 24[2], per PVC	17TH4	1.50	(T)
- Each additional PVC over 24[3], per PVC	17TJ4	0.45	(D) (T) (D)

(D)

[1] For each PVC over 5, up to and including 14, add this rate to the monthly rate for 5 PVCs. (T)

[2] For each PVC over 14, up to and including 24, add this rate to the total monthly rate for 14 PVCs. (T)

[3] For each PVC over 24 add this rate to the total monthly rate for 24 PVCs. (T)

8. ADVANCED COMMUNICATIONS NETWORKS

8.3 FRAME RELAY SERVICE
8.3.5 RATES AND CHARGES

E. 48 Months

4. Network-To-Network Information Transfer (NNIT) (Cont'd)

	USOC	MONTHLY RATE	
• 336 or 384 kbps - NNIT, per Port			
- 1 PVC	17TA4	$155.15	(D)
- 2 PVCs	17TB4	163.10	(D)
- 3 PVCs	17TC4	171.10	(D)
- 4 PVCs	17TD4	179.10	(D)
- 5 PVCs	17TE4	187.05	(D)
- 6 PVCs through 14[1], per PVC	17TG4	3.20	(T)
- 15 PVCs through 24[2], per PVC	17TH4	2.30	(T)
- Each additional PVC over 24[3], per PVC	17TJ4	0.45	(T)

(D)

[1] For each PVC over 5, up to and including 14, add this rate to the monthly rate for 5 PVCs. (T)

[2] For each PVC over 14, up to and including 24, add this rate to the total monthly rate for 14 PVCs. (T)

[3] For each PVC over 24 add this rate to the total monthly rate for 24 PVCs. (T)

8. ADVANCED COMMUNICATIONS NETWORKS

8.3 FRAME RELAY SERVICE
8.3.5 RATES AND CHARGES

E. 48 Months

4. Network-To-Network Information Transfer (NNIT) (Cont'd)

	USOC	MONTHLY RATE	
• 448 or 512 kbps - NNIT, per Port			
- 1 PVC	17TA4	$187.05	(D)
- 2 PVCs	17TB4	195.75	(D)
- 3 PVCs	17TC4	204.40	(D)
- 4 PVCs	17TD4	213.05	(D)
- 5 PVCs	17TE4	221.75	(D)
- 6 PVCs through 14[1], per PVC	17TG4	3.40	(T)
- 15 PVCs through 24[2], per PVC	17TH4	2.30	(T)
- Each additional PVC over 24[3], per PVC	17TJ4	0.45	(D) (T) (D)

(D)

[1] For each PVC over 5, up to and including 14, add this rate to the monthly rate for 5 PVCs. (T)

[2] For each PVC over 14, up to and including 24, add this rate to the total monthly rate for 14 PVCs. (T)

[3] For each PVC over 24 add this rate to the total monthly rate for 24 PVCs. (T)

8. ADVANCED COMMUNICATIONS NETWORKS

8.3 FRAME RELAY SERVICE
8.3.5 RATES AND CHARGES

E. 48 Months

4. Network-To-Network Information Transfer (NNIT) (Cont'd)

	USOC	MONTHLY RATE	
• 672 or 768 kbps - NNIT, per Port			
- 1 PVC	17TA4	$255.50	(D)
- 2 PVCs	17TB4	267.35	(D)
- 3 PVCs	17TC4	279.25	(D)
- 4 PVCs	17TD4	291.10	(D)
- 5 PVCs	17TE4	302.95	(D)
- 6 PVCs through 14[1], per PVC	17TG4	3.40	(T)
- 15 PVCs through 24[2], per PVC	17TH4	2.30	(T)
- Each additional PVC over 24[3], per PVC	17TJ4	0.45	(T)

(D)

[1] For each PVC over 5, up to and including 14, add this rate to the monthly rate for 5 PVCs. (T)

[2] For each PVC over 14, up to and including 24, add this rate to the total monthly rate for 14 PVCs. (T)

[3] For each PVC over 24 add this rate to the total monthly rate for 24 PVCs. (T)

8. ADVANCED COMMUNICATIONS NETWORKS

Certain material previously found on this page can now be found on Page 8-226.

8. ADVANCED COMMUNICATIONS NETWORKS

8.3 FRAME RELAY SERVICE
8.3.5 RATES AND CHARGES

E. 48 Months

4. Network-To-Network Information Transfer (NNIT) (Cont'd)

	USOC	MONTHLY RATE	
• 1.544 Mbps - NNIT, per Port			
- 1 PVC	17TA4	$191.65	(D)
- 2 PVCs	17TB4	225.40	(D)
- 3 PVCs	17TC4	259.15	(D)
- 4 PVCs	17TD4	292.90	(D)
- 5 PVCs	17TE4	326.70	(D)
- 6 PVCs through 14[1], per PVC	17TG4	17.35	(T)
- 15 PVCs through 24[2], per PVC	17TH4	4.55	(T)
- Each additional PVC over 24[3], per PVC	17TJ4	0.45	(D)

(D)

[1] For each PVC over 5, up to and including 14, add this rate to the monthly rate for 5 PVCs. (T)

[2] For each PVC over 14, up to and including 24, add this rate to the total monthly rate for 14 PVCs. (T)

[3] For each PVC over 24 add this rate to the total monthly rate for 24 PVCs. (T)

8. ADVANCED COMMUNICATIONS NETWORKS

8.3 FRAME RELAY SERVICE (T)(M)

8.3.5 RATES AND CHARGES

E. 48 Months

4. Network-To-Network Information Transfer (NNIT) (Cont'd) (T)

	USOC	MONTHLY RATE
• 44.736 Mbps - NNIT, per Port		
- 1 PVC	17TU4	$3,467.50
- 2 PVCs through 50[1], per PVC	17TV4	27.38
- 51 PVCs through 140[2], per PVC	17TW4	7.30
- 141 PVCs through 240[3], per PVC	17TY4	3.65
- 241 PVCs through 500[4], per PVC	17TZ4	1.83

[1] For each PVC over 1, up to and including 50, add this rate to the monthly rate for 1 PVC.

[2] For each PVC over 50, up to and including 140, add this rate to the total monthly rate for 50 PVCs.

[3] For each PVC over 140, up to and including 240, add this rate to the total monthly rate for 140 PVCs.

[4] For each PVC over 240, up to and including 500, add this rate to the total monthly rate for 240 PVCs. (M)

Certain material on this page formerly appeared on Page 8-195.1.
Certain material previously found on this page can now be found on Pages 8-229 and 8-230.

8. ADVANCED COMMUNICATIONS NETWORKS

8.3 FRAME RELAY SERVICE
8.3.5 RATES AND CHARGES

E. 48 Months (Cont'd)

	USOC	NONRECURRING CHARGE	MONTHLY RATE
5. Central Office Connecting Channel			
• Per connection between a Multiplexer and FRS Port or between a Company facility port and an FRS Port			
- For speeds up to 1.544 Mbps	CU5VR	$25.00	$ 0.60
- For speeds up to 44.736 Mbps	CU5VR	50.00	9.13
6. Transport Channels	N/A	[1]	[1]
7. Optional Features and Functions			
• Customer Network Management (CNM)			
- Per workstation registered address initial setup	NM6X4	15.00	61.14
- Subsequent CNM order charge, per workstation registered address change or addition of CNM to existing FRS[2]	NR9FM	38.00	–

[1] See Section 7 and/or 17 for Transport Channel rates and regulations. (C)

[2] When adding CNM to existing FRS, the Subsequent CNM Order Charge applies in addition to the Nonrecurring Charge for the initial setup of CNM.

8. ADVANCED COMMUNICATIONS NETWORKS

8.3 FRAME RELAY SERVICE (S-y)

8.3.5 RATES AND CHARGES

E. 48 Months

7. Optional Features and Functions (Cont'd)

	USOC	NONRECURRING CHARGE	MONTHLY RATE	
• Priority UNIT PVC[1] (Grandfathered), per PVC				(S-y) (C-y)
- 56 or 64 kbps	PV7X4	$50.00	$4.56	(S-y)
- 112 or 128 kbps	PV7X4	50.00	5.32	
- 224 or 256 kbps	PV7X4	50.00	6.09	
- 336 or 384 kbps	PV7X4	50.00	6.84	
- 448 or 512 kbps	PV7X4	50.00	7.60	
- 672 or 768 kbps	PV7X4	50.00	8.37	
- 1.544 Mbps	PV7X4	50.00	9.13	
- 44.736 Mbps	PV7X4	50.00	9.13	

[1] Priority PVC rates and charges apply in addition to the UNIT PVC rates and charges set forth preceding. (S-y)

(y) Reissued matter filed under Transmittal No. 28, to become effective December 6, 2000.

(Filed under Transmittal 30.)

8. ADVANCED COMMUNICATIONS NETWORKS

Certain material previously found on this page can now be found on Page 8-234.

8. ADVANCED COMMUNICATIONS NETWORKS

8.3 FRAME RELAY SERVICE (S-y)
8.3.5 RATES AND CHARGES (Cont'd) (T-y)

(D-y)

(y) Reissued matter filed under Transmittal No. 28, to become effective December 6, 2000.

8. ADVANCED COMMUNICATIONS NETWORKS

8.3 FRAME RELAY SERVICE
8.3.5 RATES AND CHARGES (Cont'd)

F. 60 Months

	USOC	NONRECURRING CHARGE	MONTHLY RATE	
1. Access Link, per Access Link				
• 56 or 64 kbps	L7AX5	$450.00	$ 65.00	
- Vintage				(T)
				(D)
12/14/96 through 12/13/01			42.30	(T)
• 2-Wire 128 kbps (Grandfathered)	L7TA5	450.00	36.00	
• 1.544 Mbps[1]	L7AX5	450.00	113.85	(T)
				(D)
2. Stand-Alone Access Link, per Access Link				
• 56 or 64 kbps	NNLX5	450.00	65.00	
- Vintage				(T)
				(D)
12/14/96 through 12/13/01			42.30	(T)
• 1.544 Mbps[1]	NNLX5	450.00	113.85	(T)

(D)
[1] The nonrecurring charge will not apply to customers who qualify for the Volume NRC Waiver as set forth in 8.3.4.A., preceding. (T)

8. ADVANCED COMMUNICATIONS NETWORKS

8.3 FRAME RELAY SERVICE (T)(M)
8.3.5 RATES AND CHARGES
F. 60 Months (Cont'd) (T)

3. User-To-Network Information Transfer (UNIT)

	USOC	NONRECURRING CHARGE	
• 56 or 64 kbps			
- First PVC	NRBF1	$50.00	
- Each additional PVC	NRBF2	20.00	
- Subsequent PVC(s) order charge, per order[1]	NRBFO	75.00	(T)

[1] When appropriate, the "Each additional PVC" nonrecurring charge applies in addition to the "Subsequent PVC order charge". (T) (M)

Certain material on this page formerly appeared on Page 8-199.
Certain material previously found on this page can now be found on Page 8-237.

8. ADVANCED COMMUNICATIONS NETWORKS

8.3 FRAME RELAY SERVICE
8.3.5 RATES AND CHARGES

F. 60 Months

3. User-To-Network Information Transfer (UNIT) (Cont'd)

	USOC	NONRECURRING CHARGE	
• 2-Wire 128 kbps (Grandfathered)			
- First PVC	NRBF7	$300.00	
- Each additional PVC	NRBF8	20.00	
- Subsequent PVC(s) order charge, per order[1]	NRBF9	75.00	
• 112 or 128 kbps (4-Wire), 224 or 256 kbps, 336 or 384 kbps, 448 or 512 kbps, and 672 or 768 kbps			
- First PVC	NRBF1	250.00	
- Each additional PVC	NRBF2	20.00	
- Subsequent PVC(s) order charge, per order[1]	NRBFO	75.00	
• 1.544 Mbps			
- First PVC[2]	NRBF1	50.00	(C)
- Each additional PVC[2]	NRBF2	20.00	(C)
- Subsequent PVC(s) order charge, per order[1]	NRBFO	75.00	

[1] When appropriate, the "Each additional PVC" nonrecurring charge applies in addition to the "Subsequent PVC order charge".

[2] This nonrecurring charge will not apply to customers who qualify for the Volume NRC Waiver as set forth in 8.3.4.A., preceding. (N) (N)

8. ADVANCED COMMUNICATIONS NETWORKS

8.3 FRAME RELAY SERVICE
8.3.5 RATES AND CHARGES

F. 60 Months

3. User-To-Network Information Transfer (UNIT) (Cont'd)

	USOC	NONRECURRING CHARGE	
• 44.736 Mbps			
- First PVC[2]	NRBF1	$250.00	(C)
- Each additional PVC[2]	NRBF2	50.00	(C)
- Subsequent PVC(s) order charge, per order[1]	NRBFO	75.00	
• Fault Tolerant Service (Grandfathered), per UNIT			
- Initial Service Establishment	NRBF4	500.00	
- Subsequent Service Establishment	NRBF5	50.00	
- Activation and Restoral	NRBF6	500.00	

[1] When appropriate, the "Each additional PVC" nonrecurring charge applies in addition to the "Subsequent PVC order charge".

[2] This nonrecurring charge will not apply to customers who qualify for the Volume NRC Waiver as set forth in 8.3.4.A., preceding. (N) (N)

8. ADVANCED COMMUNICATIONS NETWORKS

8.3 FRAME RELAY SERVICE
8.3.5 RATES AND CHARGES

F. 60 Months

3. User-To-Network Information Transfer (UNIT) (Cont'd)

	USOC	MONTHLY RATE	
• 56 or 64 kbps - UNIT, per Port			
- 0 PVCs, used with Fault Tolerant Service	17T95	$31.50	
- 1 PVC	17TA5	35.35	
- 2 PVCs	17TB5	40.08	
- 3 PVCs	17TC5	43.01	
- 4 PVCs	17TD5	45.95	
- 5 PVCs	17TE5	48.86	
- 6 PVCs through 14[1], per PVC	17TG5	1.12	(D)
- 15 PVCs through 24[2], per PVC	17TH5	0.24	(T) (D)
- Each additional PVC over 24[3], per PVC	17TJ5	0.25	(T) (D)
• 2-Wire 128 kbps – UNIT (Grandfathered), per Port			
- 1 PVC	18TB5	76.00	
- 2 through 8 PVCs[4]	18TC5	6.64	(T)

[1] For each PVC over 5, up to and including 14, add this rate to the monthly rate for 5 PVCs. (D)

[2] For each PVC over 14, up to and including 24, add this rate to the total monthly rate for 14 PVCs. (T)

[3] For each PVC over 24 add this rate to the total monthly rate for 24 PVCs. (T) (D)

[4] For each PVC over 1, up to and including 8, add this rate to the monthly rate for 1 PVC. (T)

8. ADVANCED COMMUNICATIONS NETWORKS

8.3 FRAME RELAY SERVICE
8.3.5 RATES AND CHARGES

F. 60 Months

3. User-To-Network Information Transfer (UNIT) (Cont'd)

	USOC	MONTHLY RATE	
• 112 or 128 kbps (4-Wire) - UNIT, per Port			
- 1 PVC	17TA5	$108.00	(D)
- 2 PVCs	17TB5	110.70	(D)
- 3 PVCs	17TC5	113.40	(D)
- 4 PVCs	17TD5	116.10	(D)
- 5 PVCs	17TE5	118.80	(D)
- 6 PVCs through 14[1], per PVC	17TG5	1.10	(T)
- 15 PVCs through 24[2], per PVC	17TH5	0.75	(T)
- Each additional PVC over 24[3], per PVC	17TJ5	0.45	(D) (T) (D)

(D)

[1] For each PVC over 5, up to and including 14, add this rate to the monthly rate for 5 PVCs. (T)

[2] For each PVC over 14, up to and including 24, add this rate to the total monthly rate for 14 PVCs. (T)

[3] For each PVC over 24 add this rate to the total monthly rate for 24 PVCs. (T)

8. ADVANCED COMMUNICATIONS NETWORKS

8.3 FRAME RELAY SERVICE
8.3.5 RATES AND CHARGES

F. 60 Months

3. User-To-Network Information Transfer (UNIT) (Cont'd)

	USOC	MONTHLY RATE	
• 224 or 256 kbps - UNIT, per Port			
- 1 PVC	17TA5	$144.00	(D)
- 2 PVCs	17TB5	149.40	(D)
- 3 PVCs	17TC5	154.80	(D)
- 4 PVCs	17TD5	160.20	(D)
- 5 PVCs	17TE5	165.60	(D)
- 6 PVCs through 14[1], per PVC	17TG5	2.10	(T)
- 15 PVCs through 24[2], per PVC	17TH5	1.50	(T)
- Each additional PVC over 24[3], per PVC	17TJ5	0.45	(D) (T) (D)

(D)

[1] For each PVC over 5, up to and including 14, add this rate to the monthly rate for 5 PVCs. (T)

[2] For each PVC over 14, up to and including 24, add this rate to the total monthly rate for 14 PVCs. (T)

[3] For each PVC over 24 add this rate to the total monthly rate for 24 PVCs. (T)

8. ADVANCED COMMUNICATIONS NETWORKS

8.3 FRAME RELAY SERVICE
8.3.5 RATES AND CHARGES

F. 60 Months

3. User-To-Network Information Transfer (UNIT) (Cont'd)

	USOC	MONTHLY RATE	
• 336 or 384 kbps - UNIT, per Port			
- 1 PVC	17TA5	$180.00	(D)
- 2 PVCs	17TB5	187.90	(D)
- 3 PVCs	17TC5	195.75	(D)
- 4 PVCs	17TD5	203.65	(D)
- 5 PVCs	17TE5	211.50	(D)
- 6 PVCs through 14[1], per PVC	17TG5	3.15	(T)
- 15 PVCs through 24[2], per PVC	17TH5	2.25	(T)
- Each additional PVC over 24[3], per PVC	17TJ5	0.45	(D) (T)

[1] For each PVC over 5, up to and including 14, add this rate to the monthly rate for 5 PVCs. (T)

[2] For each PVC over 14, up to and including 24, add this rate to the total monthly rate for 14 PVCs. (T)

[3] For each PVC over 24 add this rate to the total monthly rate for 24 PVCs. (T)

8. ADVANCED COMMUNICATIONS NETWORKS

8.3 FRAME RELAY SERVICE
8.3.5 RATES AND CHARGES

F. 60 Months

3. User-To-Network Information Transfer (UNIT) (Cont'd)

	USOC	MONTHLY RATE	
• 448 or 512 kbps - UNIT, per Port			
- 1 PVC	17TA5	$211.50	(D)
- 2 PVCs	17TB5	220.05	(D)
- 3 PVCs	17TC5	228.60	(D)
- 4 PVCs	17TD5	237.15	(D)
- 5 PVCs	17TE5	245.70	(D)
- 6 PVCs through 14[1], per PVC	17TG5	3.40	(T)
- 15 PVCs through 24[2], per PVC	17TH5	2.25	(T)
- Each additional PVC over 24[3], per PVC	17TJ5	0.45	(D) (T)

[1] For each PVC over 5, up to and including 14, add this rate to the monthly rate for 5 PVCs. (T)

[2] For each PVC over 14, up to and including 24, add this rate to the total monthly rate for 14 PVCs. (T)

[3] For each PVC over 24 add this rate to the total monthly rate for 24 PVCs. (T)

8. ADVANCED COMMUNICATIONS NETWORKS

8.3 FRAME RELAY SERVICE
8.3.5 RATES AND CHARGES

F. 60 Months

3. User-To-Network Information Transfer (UNIT) (Cont'd)

	USOC	MONTHLY RATE	
• 672 or 768 kbps - UNIT, per Port			
- 1 PVC	17TA5	$279.00	(D)
- 2 PVCs	17TB5	291.60	(D)
- 3 PVCs	17TC5	304.20	(D)
- 4 PVCs	17TD5	316.80	(D)
- 5 PVCs	17TE5	329.40	(D)
- 6 PVCs through 14[1], per PVC	17TG5	3.60	(D) (T)
- 15 PVCs through 24[2], per PVC	17TH5	2.50	(T)
- Each additional PVC over 24[3], per PVC	17TJ5	0.75	(T)

(D)

[1] For each PVC over 5, up to and including 14, add this rate to the monthly rate for 5 PVCs. (T)

[2] For each PVC over 14, up to and including 24, add this rate to the total monthly rate for 14 PVCs. (T)

[3] For each PVC over 24 add this rate to the total monthly rate for 24 PVCs. (T)

8. ADVANCED COMMUNICATIONS NETWORKS

Certain material previously found on this page can now be found on Page 8-251.

8. ADVANCED COMMUNICATIONS NETWORKS

8.3 FRAME RELAY SERVICE
8.3.5 RATES AND CHARGES

F. 60 Months

3. User-To-Network Information Transfer (UNIT) (Cont'd)

	USOC	MONTHLY RATE	
• 1.544 Mbps - UNIT, per Port			
- 0 PVCs, used with Fault Tolerant Service	17T95	$193.50	
- 1 PVC	17TA5	216.00	(D)
- 2 PVCs	17TB5	249.30	(D)
- 3 PVCs	17TC5	282.60	(D)
- 4 PVCs	17TD5	315.90	(D)
- 5 PVCs	17TE5	349.20	(D)
- 6 PVCs through 14[1], per PVC	17TG5	17.10	(D) (T)
- 15 PVCs through 24[2], per PVC	17TH5	4.50	(D) (T)
- Each additional PVC over 24[3], per PVC	17TJ5	0.45	(D) (T)

[1] For each PVC over 5, up to and including 14, add this rate to the monthly rate for 5 PVCs. (D) (T)

[2] For each PVC over 14, up to and including 24, add this rate to the total monthly rate for 14 PVCs. (D) (T)

[3] For each PVC over 24 add this rate to the total monthly rate for 24 PVCs. (T)

8. ADVANCED COMMUNICATIONS NETWORKS

8.3 FRAME RELAY SERVICE (T)(M)

8.3.5 RATES AND CHARGES

F. 60 Months

3. User-To-Network Information Transfer (UNIT) (Cont'd) (T)

	USOC	MONTHLY RATE
• 44.736 Mbps - UNIT, per Port		
- 0 PVCs, used with Fault Tolerant Service	17T95	$3,150.00
- 1 PVC	17TU5	3,420.00
- 2 PVCs through 50[1], per PVC	17TV5	27.00
- 51 PVCs through 140[2], per PVC	17TW5	7.20
- 141 PVCs through 240[3], per PVC	17TY5	3.60
- 241 PVCs through 500[4], per PVC	17TZ5	1.80

[1] For each PVC over 1, up to and including 50, add this rate to the monthly rate for 1 PVC.
[2] For each PVC over 50, up to and including 140, add this rate to the total monthly rate for 50 PVCs.
[3] For each PVC over 140, up to and including 240, add this rate to the total monthly rate for 140 PVCs.
[4] For each PVC over 240, up to and including 500, add this rate to the total monthly rate for 240 PVCs. (M)

Certain material on this page formerly appeared on Page 8-206.
Certain material previously found on this page can now be found on Pages 8-254 and 8-255.

8. ADVANCED COMMUNICATIONS NETWORKS

8.3 FRAME RELAY SERVICE (T)(M)
8.3.5 RATES AND CHARGES (T)

F. 60 Months (Cont'd)

4. Network-To-Network Information Transfer (NNIT)

	USOC	NONRECURRING CHARGE
• 56 or 64 kbps		
- First PVC	NRBF1	$ 50.00
- Each additional PVC	NRBF2	20.00
- Subsequent PVC(s) order charge, per order[1]	NRBFO	75.00
• 112 or 128 kbps, 224 or 256 kbps, 336 or 384 kbps, 448 or 512 kbps, and 672 or 768 kbps		
- First PVC	NRBF1	250.00
- Each additional PVC	NRBF2	20.00
- Subsequent PVC(s) order charge, per order[1]	NRBFO	75.00
• 1.544 Mbps		
- First PVC	NRBF1	50.00
- Each additional PVC	NRBF2	20.00
- Subsequent PVC(s) order charge, per order[1]	NRBFO	75.00

[1] When appropriate, the "Each additional PVC" nonrecurring charge applies in addition to the "Subsequent PVC order charge". (M)

Certain material on this page formerly appeared on Page 8-207.
Certain material previously found on this page can now be found on Pages 8-256 and 8-257.

8. ADVANCED COMMUNICATIONS NETWORKS

8.3 FRAME RELAY SERVICE (T)(M)

8.3.5 RATES AND CHARGES

F. 60 Months

4. Network-To-Network Information Transfer (NNIT) (Cont'd) (T)

	USOC	NONRECURRING CHARGE
• 44.736 Mbps		
- First PVC	NRBF1	$250.00
- Each additional PVC	NRBF2	50.00
- Subsequent PVC(s) order charge, per order[1]	NRBFO	75.00

[1] When appropriate, the "Each additional PVC" nonrecurring charge applies in addition to the "Subsequent PVC order charge". (M)

Certain material on this page formerly appeared on Page 8-207.1.
Certain material previously found on this page can now be found on Page 8-258.

8. ADVANCED COMMUNICATIONS NETWORKS

Certain material previously found on this page can now be found on Page 8-259.

8. ADVANCED COMMUNICATIONS NETWORKS

8.3 FRAME RELAY SERVICE
8.3.5 RATES AND CHARGES

F. 60 Months

4. Network-To-Network Information Transfer (NNIT) (Cont'd)

	USOC	MONTHLY RATE	
• 56 or 64 kbps - NNIT, per Port			
- 1 PVC	17TA5	$34.20	(D)
- 2 PVCs	17TB5	38.10	(D)
- 3 PVCs	17TC5	42.05	(D)
- 4 PVCs	17TD5	45.95	(D)
- 5 PVCs	17TE5	49.85	(D)
- 6 PVCs through 14[1], per PVC	17TG5	0.45	(T)
- 15 PVCs through 24[2], per PVC	17TH5	0.25	(T)
- Each additional PVC over 24[3], per PVC	17TJ5	0.25	(T)

(D)

[1] For each PVC over 5, up to and including 14, add this rate to the monthly rate for 5 PVCs. (T)

[2] For each PVC over 14, up to and including 24, add this rate to the total monthly rate for 14 PVCs. (T)

[3] For each PVC over 24 add this rate to the total monthly rate for 24 PVCs. (T)

8. ADVANCED COMMUNICATIONS NETWORKS

8.3 FRAME RELAY SERVICE
8.3.5 RATES AND CHARGES

F. 60 Months

4. Network-To-Network Information Transfer (NNIT) (Cont'd)

	USOC	MONTHLY RATE	
• 112 or 128 kbps - NNIT, per Port			
- 1 PVC	17TA5	$76.50	(D)
- 2 PVCs	17TB5	79.20	(D)
- 3 PVCs	17TC5	81.90	(D)
- 4 PVCs	17TD5	84.60	(D)
- 5 PVCs	17TE5	87.30	(D)
- 6 PVCs through 14[1], per PVC	17TG5	1.10	(T)
- 15 PVCs through 24[2], per PVC	17TH5	0.75	(T)
- Each additional PVC over 24[3], per PVC	17TJ5	0.45	(D)

(D)

[1] For each PVC over 5, up to and including 14, add this rate to the monthly rate for 5 PVCs. (T)

[2] For each PVC over 14, up to and including 24, add this rate to the total monthly rate for 14 PVCs. (T)

[3] For each PVC over 24 add this rate to the total monthly rate for 24 PVCs. (T)

8. ADVANCED COMMUNICATIONS NETWORKS

8.3 FRAME RELAY SERVICE
8.3.5 RATES AND CHARGES

F. 60 Months

4. Network-To-Network Information Transfer (NNIT) (Cont'd)

	USOC	MONTHLY RATE	
• 224 or 256 kbps - NNIT, per Port			
- 1 PVC	17TA5	$112.50	(D)
- 2 PVCs	17TB5	117.90	(D)
- 3 PVCs	17TC5	123.30	(D)
- 4 PVCs	17TD5	128.70	(D)
- 5 PVCs	17TE5	134.10	(D)
- 6 PVCs through 14[1], per PVC	17TG5	2.10	(T)
- 15 PVCs through 24[2], per PVC	17TH5	1.50	(T)
- Each additional PVC over 24[3], per PVC	17TJ5	0.45	(D) (T) (D)

(D)

[1] For each PVC over 5, up to and including 14, add this rate to the monthly rate for 5 PVCs. (T)

[2] For each PVC over 14, up to and including 24, add this rate to the total monthly4rate for 14 PVCs. (T)

[3] For each PVC over 24 add this rate to the total monthly rate for 24 PVCs. (T)

8. ADVANCED COMMUNICATIONS NETWORKS

8.3 FRAME RELAY SERVICE
8.3.5 RATES AND CHARGES

F. 60 Months

4. Network-To-Network Information Transfer (NNIT) (Cont'd)

	USOC	MONTHLY RATE	
• 336 or 384 kbps - NNIT, per Port			
- 1 PVC	17TA5	$153.00	(D)
- 2 PVCs	17TB5	160.90	(D)
- 3 PVCs	17TC5	168.75	(D)
- 4 PVCs	17TD5	176.65	(D)
- 5 PVCs	17TE5	184.50	(D)
- 6 PVCs through 14[1], per PVC	17TG5	3.15	(T)
- 15 PVCs through 24[2], per PVC	17TH5	2.25	(T)
- Each additional PVC over 24[3], per PVC	17TJ5	0.45	(D) (T) (D)

(D)

[1] For each PVC over 5, up to and including 14, add this rate to the monthly rate for 5 PVCs. (T)

[2] For each PVC over 14, up to and including 24, add this rate to the total monthly4rate for 14 PVCs. (T)

[3] For each PVC over 24 add this rate to the total monthly rate for 24 PVCs. (T)

8. ADVANCED COMMUNICATIONS NETWORKS

8.3 FRAME RELAY SERVICE
8.3.5 RATES AND CHARGES

F. 60 Months

4. Network-To-Network Information Transfer (NNIT) (Cont'd)

	USOC	MONTHLY RATE	
• 448 or 512 kbps - NNIT, per Port			
- 1 PVC	17TA5	$184.50	(D)
- 2 PVCs	17TB5	193.05	(D)
- 3 PVCs	17TC5	201.60	(D)
- 4 PVCs	17TD5	210.15	(D)
- 5 PVCs	17TE5	218.70	(D)
- 6 PVCs through 14[1], per PVC	17TG5	3.40	(T)
- 15 PVCs through 24[2], per PVC	17TH5	2.25	(T)
- Each additional PVC over 24[3], per PVC	17TJ5	0.45	(D) (T) (D)

(D)

[1] For each PVC over 5, up to and including 14, add this rate to the monthly rate for 5 PVCs. (T)

[2] For each PVC over 14, up to and including 24, add this rate to the total monthly rate for 14 PVCs. (T)

[3] For each PVC over 24 add this rate to the total monthly rate for 24 PVCs. (T)

8. ADVANCED COMMUNICATIONS NETWORKS

8.3 FRAME RELAY SERVICE
8.3.5 RATES AND CHARGES

F. 60 Months

4. Network-To-Network Information Transfer (NNIT) (Cont'd)

	USOC	MONTHLY RATE	
• 672 or 768 kbps - NNIT, per Port			
- 1 PVC	17TA5	$252.00	(D)
- 2 PVCs	17TB5	263.70	(D)
- 3 PVCs	17TC5	275.40	(D)
- 4 PVCs	17TD5	287.10	(D)
- 5 PVCs	17TE5	298.80	(D)
- 6 PVCs through 14[1], per PVC	17TG5	3.40	(D) (T)
- 15 PVCs through 24[2], per PVC	17TH5	2.25	(T)
- Each additional PVC over 24[3], per PVC	17TJ5	0.45	(T)

(D)

[1] For each PVC over 5, up to and including 14, add this rate to the monthly rate for 5 PVCs. (T)

[2] For each PVC over 14, up to and including 24, add this rate to the total monthly rate for 14 PVCs. (T)

[3] For each PVC over 24 add this rate to the total monthly rate for 24 PVCs. (T)

8. ADVANCED COMMUNICATIONS NETWORKS

8.3 FRAME RELAY SERVICE
8.3.5 RATES AND CHARGES

F. 60 Months

4. Network-To-Network Information Transfer (NNIT) (Cont'd)

	USOC	MONTHLY RATE	
• 1.544 Mbps - NNIT, per Port			
- 1 PVC	17TA5	$189.00	(D)
- 2 PVCs	17TB5	222.30	(D)
- 3 PVCs	17TC5	255.60	(D)
- 4 PVCs	17TD5	288.90	(D)
- 5 PVCs	17TE5	322.20	(D)
- 6 PVCs through 14[1], per PVC	17TG5	17.10	(T)
- 15 PVCs through 24[2], per PVC	17TH5	4.50	(T)
- Each additional PVC over 24[3], per PVC	17TJ5	0.45	(D)

(D)

[1] For each PVC over 5, up to and including 14, add this rate to the monthly rate for 5 PVCs. (T)

[2] For each PVC over 14, up to and including 24, add this rate to the total monthly rate for 14 PVCs. (T)

[3] For each PVC over 24 add this rate to the total monthly rate for 24 PVCs. (T)

8. ADVANCED COMMUNICATIONS NETWORKS

8.3 FRAME RELAY SERVICE (T)(M)

8.3.5 RATES AND CHARGES

F. 60 Months

4. Network-To-Network Information Transfer (NNIT) (Cont'd) (T)

	USOC	MONTHLY RATE
• 44.736 Mbps - NNIT, per Port		
- 1 PVC	17TU5	$3,420.00
- 2 PVCs through 50[1], per PVC	17TV5	27.00
- 51 PVCs through 140[2], per PVC	17TW5	7.20
- 141 PVCs through 240[3], per PVC	17TY5	3.60
- 241 PVCs through 500[4], per PVC	17TZ5	1.80

[1] For each PVC over 1, up to and including 50, add this rate to the monthly rate for 1 PVC.
[2] For each PVC over 50, up to and including 140, add this rate to the total monthly rate for 50 PVCs.
[3] For each PVC over 140, up to and including 240, add this rate to the total monthly rate for 140 PVCs.
[4] For each PVC over 240, up to and including 500, add this rate to the total monthly rate for 240 PVCs. (M)

Certain material on this page formerly appeared on Page 8-211.1.
Certain material previously found on this page can now be found on Pages 8-271 and 8-272.

8. ADVANCED COMMUNICATIONS NETWORKS

8.3 FRAME RELAY SERVICE
8.3.5 RATES AND CHARGES

F. 60 Months (Cont'd)

	USOC	NONRECURRING CHARGE	MONTHLY RATE
5. Central Office Connecting Channel			
• Per connection between a Multiplexer and FRS Port or between a Company facility port and an FRS Port			
- For speeds up to 1.544 Mbps	CU5WR	$25.00	$ 0.59
- For speeds up to 44.736 Mbps	CU5WR	50.00	9.00
6. Transport Channels	N/A	[1]	[1]
7. Optional Features and Functions			
• Customer Network Management (CNM)			
- Per workstation registered address initial setup	NM6X5	15.00	60.30
- Subsequent CNM order charge, per workstation registered address change or addition of CNM to existing FRS[2]	NR9FM	38.00	–

[1] See Section 7 and/or 17 for Transport Channel rates and regulations. (C)

[2] When adding CNM to existing FRS, the Subsequent CNM Order Charge applies in addition to the Nonrecurring Charge for the initial setup of CNM.

8. ADVANCED COMMUNICATIONS NETWORKS

8.3 FRAME RELAY SERVICE (T)(M)
8.3.5 RATES AND CHARGES
F. 60 Months
7. Optional Features and Functions (Cont'd) (T)

	USOC	NONRECURRING CHARGE	MONTHLY RATE
• Priority UNIT PVC[1], per PVC			
- 56 or 64 kbps	PV7X5	$50.00	$4.50
- 112 or 128 kbps	PV7X5	50.00	5.25
- 224 or 256 kbps	PV7X5	50.00	6.00
- 336 or 384 kbps	PV7X5	50.00	6.75
- 448 or 512 kbps	PV7X5	50.00	7.50
- 672 or 768 kbps	PV7X5	50.00	8.25
- 1.544 Mbps	PV7X5	50.00	9.00
- 44.736 Mbps	PV7X5	50.00	9.00

[1] Priority PVC rates and charges apply in addition to the UNIT PVC rates and charges set forth preceding. (M)

Certain material on this page formerly appeared on Page 8-213.
Certain material previously found on this page can now be found on Page 8-274.

8. ADVANCED COMMUNICATIONS NETWORKS

8.3 FRAME RELAY SERVICE (S-y)
8.3.5 RATES AND CHARGES (Cont'd) (T-y)

(D-y)

(y) Reissued matter filed under Transmittal No. 28, to become effective December 6, 2000.

(Filed under Transmittal 30.)

8. ADVANCED COMMUNICATIONS NETWORKS

Certain material previously found on this page can now be found on Page 8-276.

8. ADVANCED COMMUNICATIONS NETWORKS

8.3 FRAME RELAY SERVICE
8.3.5 RATES AND CHARGES (Cont'd)

G. 72 Months

	USOC	NONRECURRING CHARGE	MONTHLY RATE	
1. Access Link, per Access Link				
• 56 or 64 kbps	L7AX6	$450.00	$ 65.00	
- Vintage				(T)
				(D)
11/14/94 through 12/13/96			36.68	(T)
12/14/96 through 12/13/01			42.30	(T)
• 1.544 Mbps[1]	L7AX6	450.00	113.85	
				(D)
2. Stand-Alone Access Link, per Access Link				
• 56 or 64 kbps	NNLX6	450.00	65.00	
- Vintage				(T)
11/14/94 through 12/13/96			36.68	
12/14/96 through 12/13/01			42.30	
• 1.544 Mbps[1]	NNLX6	450.00	113.85	(T)

(D)

[1] The nonrecurring charge will not apply to customers who qualify for the Volume NRC Waiver as set forth in 8.3.4.A., preceding. (T)

8. ADVANCED COMMUNICATIONS NETWORKS

8.3 FRAME RELAY SERVICE (T)(M)
8.3.5 RATES AND CHARGES
G. 72 Months (Cont'd) (T)

3. User-To-Network Information Transfer (UNIT)

	USOC	NONRECURRING CHARGE	
• 56 or 64 kbps			
- First PVC	NRBF1	$50.00	
- Each additional PVC	NRBF2	20.00	
- Subsequent PVC(s) order charge, per order[1]	NRBFO	75.00	(T)

[1] When appropriate, the "Each additional PVC" nonrecurring charge applies in addition to the "Subsequent PVC order charge". (T) (M)

Certain material on this page formerly appeared on Page 8-215.
Certain material previously found on this page can now be found on Pages 8-279 and 8-280.

8. ADVANCED COMMUNICATIONS NETWORKS

8.3 FRAME RELAY SERVICE
8.3.5 RATES AND CHARGES

G. 72 Months

3. User-To-Network Information Transfer (UNIT) (Cont'd)

	USOC	NONRECURRING CHARGE	
• 112 or 128 kbps, 224 or 256 kbps, 336 or 384 kbps, 448 or 512 kbps, and 672 or 768 kbps			
- First PVC	NRBF1	$250.00	
- Each additional PVC	NRBF2	20.00	
- Subsequent PVC(s) order charge, per order[1]	NRBFO	75.00	
• 1.544 Mbps			
- First PVC[2]	NRBF1	50.00	(C)
- Each additional PVC[2]	NRBF2	20.00	(C)
- Subsequent PVC(s) order charge, per order[1]	NRBFO	75.00	

[1] When appropriate, the "Each additional PVC" nonrecurring charge applies in addition to the "Subsequent PVC order charge".

[2] This nonrecurring charge will not apply to customers who qualify for the Volume NRC Waiver as set forth in 8.3.4.A., preceding. (N) (N)

8. ADVANCED COMMUNICATIONS NETWORKS

8.3 FRAME RELAY SERVICE
8.3.5 RATES AND CHARGES

G. 72 Months

3. User-To-Network Information Transfer (UNIT) (Cont'd)

	USOC	NONRECURRING CHARGE	
• 44.736 Mbps			
- First PVC[2]	NRBF1	$250.00	(C)
- Each additional PVC[2]	NRBF2	50.00	(C)
- Subsequent PVC(s) order charge, per order[1]	NRBFO	75.00	
• Fault Tolerant Service (Grandfathered), per UNIT			
- Initial Service Establishment	NRBF4	500.00	
- Subsequent Service Establishment	NRBF5	50.00	
- Activation and Restoral	NRBF6	500.00	

[1] When appropriate, the "Each additional PVC" nonrecurring charge applies in addition to the "Subsequent PVC order charge".

[2] This nonrecurring charge will not apply to customers who qualify for the Volume NRC Waiver as set forth in 8.3.4.A., preceding. (N) (N)

8. ADVANCED COMMUNICATIONS NETWORKS

Certain material previously found on this page can now be found on Page 8-284.

8. ADVANCED COMMUNICATIONS NETWORKS

8.3 FRAME RELAY SERVICE
8.3.5 RATES AND CHARGES

G. 72 Months

3. User-To-Network Information Transfer (UNIT) (Cont'd)

	USOC	MONTHLY RATE	
• 56 or 64 kbps - UNIT, per Port			
- 0 PVCs, used with Fault Tolerant Service	17T96	$31.50	
- 1 PVC	17TA6	35.35	
- 2 PVCs	17TB6	40.08	
- 3 PVCs	17TC6	43.01	
- 4 PVCs	17TD6	45.95	
- 5 PVCs	17TE6	48.86	
- 6 PVCs through 14[1], per PVC	17TG6	1.12	(D)
- 15 PVCs through 24[2], per PVC	17TH6	0.24	(T) (D)
- Each additional PVC over 24[3], per PVC	17TJ6	0.25	(T)
- Vintage			(T) (D)
11/14/94 through 12/13/96		0.10	(T)

[1] For each PVC over 5, up to and including 14, add this rate to the monthly rate for 5 PVCs. (D)

[2] For each PVC over 14, up to and including 24, add this rate to the total monthly rate for 14 PVCs. (T)

[3] For each PVC over 24 add this rate to the total monthly rate for 24 PVCs. (T)

8. ADVANCED COMMUNICATIONS NETWORKS

8.3 FRAME RELAY SERVICE
8.3.5 RATES AND CHARGES

G. 72 Months

3. User-To-Network Information Transfer (UNIT) (Cont'd)

	USOC	MONTHLY RATE	
• 112 or 128 kbps - UNIT, per Port			
- 1 PVC	17TA6	$108.00	
- Vintage			(T)
11/14/94 through 12/13/96		63.82	(T)
- 2 PVCs	17TB6	110.70	
- Vintage			(T)
11/14/94 through 12/13/96		66.97	(T)
- 3 PVCs	17TC6	113.40	
- Vintage			(T)
11/14/94 through 12/13/96		70.12	(T)
- 4 PVCs	17TD6	116.10	
- Vintage			(T)
11/14/94 through 12/13/96		73.28	(T)
- 5 PVCs	17TE6	118.80	(T)
- Vintage			
11/14/94 through 12/13/96		76.42	
- 6 PVCs through 14[1], per PVC	17TG6	1.10	
- 15 PVCs through 24[2], per PVC	17TH6	0.75	
- Vintage			
11/14/94 through 12/13/96		0.41	
- Each additional PVC over 24[3], per PVC	17TJ6	0.45	
- Vintage			
11/14/94 through 12/13/96		0.17	(T)

[1] For each PVC over 5, up to and including 14, add this rate to the monthly rate for 5 PVCs. (T)

[2] For each PVC over 14, up to and including 24, add this rate to the total monthly rate for 14 PVCs. (T)

[3] For each PVC over 24 add this rate to the total monthly rate for 24 PVCs. (T)

8. ADVANCED COMMUNICATIONS NETWORKS

8.3 FRAME RELAY SERVICE
8.3.5 RATES AND CHARGES

G. 72 Months

3. User-To-Network Information Transfer (UNIT) (Cont'd)

	USOC	MONTHLY RATE	
• 224 or 256 kbps - UNIT, per Port			
- 1 PVC	17TA6	$144.00	
- Vintage			(T)
11/14/94 through 12/13/96		86.15	(T)
- 2 PVCs	17TB6	149.40	
- Vintage			(T)
11/14/94 through 12/13/96		92.19	(T)
- 3 PVCs	17TC6	154.80	
- Vintage			(T)
11/14/94 through 12/13/96		98.22	(T)
- 4 PVCs	17TD6	160.20	
- Vintage			(T)
11/14/94 through 12/13/96		104.25	(T)
- 5 PVCs	17TE6	165.60	
- Vintage			(T)
11/14/94 through 12/13/96		110.27	(T)
- 6 PVCs through 14[1], per PVC	17TG6	2.10	(T)
- 15 PVCs through 24[2], per PVC	17TH6	1.50	
- Vintage			
11/14/94 through 12/13/96		0.92	
- Each additional PVC over 24[3], per PVC	17TJ6	0.45	
- Vintage			
11/14/94 through 12/13/96		0.34	(T)

[1] For each PVC over 5, up to and including 14, add this rate to the monthly rate for 5 PVCs. (T)

[2] For each PVC over 14, up to and including 24, add this rate to the total monthly rate for 14 PVCs. (T)

[3] For each PVC over 24 add this rate to the total monthly rate for 24 PVCs. (T)

8. ADVANCED COMMUNICATIONS NETWORKS

8.3 FRAME RELAY SERVICE
8.3.5 RATES AND CHARGES

G. 72 Months

3. User-To-Network Information Transfer (UNIT) (Cont'd)

	USOC	MONTHLY RATE	
• 336 or 384 kbps - UNIT, per Port			
- 1 PVC	17TA6	$180.00	
- Vintage			(T)
11/14/94 through 12/13/96		108.48	(T)
- 2 PVCs	17TB6	187.90	
- Vintage			(T)
11/14/94 through 12/13/96		117.39	(T)
- 3 PVCs	17TC6	195.75	
- Vintage			(T)
11/14/94 through 12/13/96		126.30	(T)
- 4 PVCs	17TD6	203.65	
- Vintage			(T)
11/14/94 through 12/13/96		135.99	(T)
- 5 PVCs	17TE6	211.50	
- Vintage			(T)
11/14/94 through 12/13/96		145.68	
- 6 PVCs through 14[1], per PVC	17TG6	3.15	
- 15 PVCs through 24[2], per PVC	17TH6	2.25	
- Vintage			
11/14/94 through 12/13/96		1.37	
- Each additional PVC over 24[3], per PVC	17TJ6	0.45	(T)

[1] For each PVC over 5, up to and including 14, add this rate to the monthly rate for 5 PVCs. (T)

[2] For each PVC over 14, up to and including 24, add this rate to the total monthly rate for 14 PVCs. (T)

[3] or each PVC over 24 add this rate to the total monthly rate for 24 PVCs. (T)

8. ADVANCED COMMUNICATIONS NETWORKS

Certain material previously found on this page can now be found on Page 8-307.

8. ADVANCED COMMUNICATIONS NETWORKS

8.3 FRAME RELAY SERVICE
8.3.5 RATES AND CHARGES

G. 72 Months

3. User-To-Network Information Transfer (UNIT) (Cont'd)

	USOC	MONTHLY RATE	
• 448 or 512 kbps - UNIT, per Port			
- 1 PVC	17TA6	$211.50	
- Vintage			(T)
11/14/94 through 12/13/96		130.82	(T)
- 2 PVCs	17TB6	220.05	
- Vintage			(T)
11/14/94 through 12/13/96		142.60	(T)
- 3 PVCs	17TC6	228.60	
- Vintage			(T)
11/14/94 through 12/13/96		154.38	(T)
- 4 PVCs	17TD6	237.15	
- Vintage			(T)
11/14/94 through 12/13/96		168.68	(T)
- 5 PVCs	17TE6	245.70	
- Vintage			(T)
11/14/94 through 12/13/96		182.97	
- 6 PVCs through 14[1], per PVC	17TG6	3.40	
- 15 PVCs through 24[2], per PVC	17TH6	2.25	
Vintage			
11/14/94 through 12/13/96		1.83	
- Each additional PVC over 24[3], per PVC	17TJ6	0.45	(T)

[1] For each PVC over 5, up to and including 14, add this rate to the monthly rate for 5 PVCs. (T)

[2] For each PVC over 14, up to and including 24, add this rate to the total monthly rate for 14 PVCs. (T)

[3] For each PVC over 24 add this rate to the total monthly rate for 24 PVCs. (T)

8. ADVANCED COMMUNICATIONS NETWORKS

8.3 FRAME RELAY SERVICE
8.3.5 RATES AND CHARGES

G. 72 Months

3. User-To-Network Information Transfer (UNIT) (Cont'd)

	USOC	MONTHLY RATE	
• 672 or 768 kbps - UNIT, per Port			
- 1 PVC	17TA6	$279.00	
- Vintage			(T)
11/14/94 through 12/13/96		176.14	(T)
- 2 PVCs	17TB6	291.60	
- Vintage			(T)
11/14/94 through 12/13/96		194.32	(T)
- 3 PVCs	17TC6	304.20	
- Vintage			(T)
11/14/94 through 12/13/96		212.49	(T)
- 4 PVCs	17TD6	316.80	
- Vintage			(T)
11/14/94 through 12/13/96		233.38	(T)
- 5 PVCs	17TE6	329.40	
- Vintage			(T)
11/14/94 through 12/13/96		254.29	
- 6 PVCs through 14[1], per PVC	17TG6	3.60	
- 15 PVCs through 24[2], per PVC	17TH6	2.50	
- Each additional PVC over 24[3], per PVC	17TJ6	0.75	(T)

[1] For each PVC over 5, up to and including 14, add this rate to the monthly rate for 5 PVCs. (T)

[2] For each PVC over 14, up to and including 24, add this rate to the total monthly rate for 14 PVCs. (T)

[3] For each PVC over 24 add this rate to the total monthly rate for 24 PVCs. (T)

8. ADVANCED COMMUNICATIONS NETWORKS

Certain material previously found on this page can now be found on Page 8-310.

8. ADVANCED COMMUNICATIONS NETWORKS

8.3 FRAME RELAY SERVICE
8.3.5 RATES AND CHARGES

G. 72 Months

3. User-To-Network Information Transfer (UNIT) (Cont'd)

	USOC	MONTHLY RATE	
• 1.544 Mbps - UNIT, per Port			
- 0 PVCs, used with Fault Tolerant Service	17T96	$193.50	
- 1 PVC	17TA6	216.00	
- Vintage			(T)
11/14/94 through 12/13/96		123.77	(T)
- 2 PVCs	17TB6	249.30	
- Vintage			(T)
11/14/94 through 12/13/96		173.89	(T)
- 3 PVCs	17TC6	282.60	
- Vintage			(T)
11/14/94 through 12/13/96		224.02	(T)
- 4 PVCs	17TD6	315.90	
- Vintage			(T)
11/14/94 through 12/13/96		273.44	(T)
- 5 PVCs	17TE6	349.20	
- Vintage			(T)
11/14/94 through 12/13/96		322.86	
- 6 PVCs through 14[1], per PVC	17TG6	17.10	(T)
			(D)
- 15 PVCs through 24[2], per PVC	17TH6	4.50	(T)
- Each additional PVC over 24[3], per PVC	17TJ6	0.45	
- Vintage			
11/14/94 through 12/13/96		0.23	(T)

[1] For each PVC over 5, up to and including 14, add this rate to the monthly rate for 5 PVCs. (T)

[2] For each PVC over 14, up to and including 24, add this rate to the total monthly rate for 14 PVCs. (T)

(D)

[3] For each PVC over 24 add this rate to the total monthly rate for 24 PVCs. (T)

8. ADVANCED COMMUNICATIONS NETWORKS

8.3 FRAME RELAY SERVICE (T)(M)

8.3.5 RATES AND CHARGES

G. 72 Months

3. User-To-Network Information Transfer (UNIT) (Cont'd) (T)

	USOC	MONTHLY RATE
• 44.736 Mbps - UNIT, per Port		
- 0 PVCs, used with Fault Tolerant Service	17T96	$3,150.00
- 1 PVC	17TU6	3,420.00
- 2 PVCs through 50[1], per PVC	17TV6	27.00
- 51 PVCs through 140[2], per PVC	17TW6	7.20
- 141 PVCs through 240[3], per PVC	17TY6	3.60
- 241 PVCs through 500[4], per PVC	17TZ6	1.80

[1] For each PVC over 1, up to and including 50, add this rate to the monthly rate for 1 PVC.
[2] For each PVC over 50, up to and including 140, add this rate to the total monthly rate for 50 PVCs.
[3] For each PVC over 140, up to and including 240, add this rate to the total monthly rate for 140 PVCs.
[4] For each PVC over 240, up to and including 500, add this rate to the total monthly rate for 240 PVCs. (M)

Certain material on this page formerly appeared on Page 8-221.
Certain material previously found on this page can now be found on Pages 8-312 and 8-313.

8. ADVANCED COMMUNICATIONS NETWORKS

8.3 FRAME RELAY SERVICE (T)(M)
8.3.5 RATES AND CHARGES (T)

G. 72 Months (Cont'd)

4. Network-To-Network Information Transfer (NNIT)

	USOC	NONRECURRING CHARGE
• 56 or 64 kbps		
- First PVC	NRBF1	$ 50.00
- Each additional PVC	NRBF2	20.00
- Subsequent PVC(s) order charge, per order[1]	NRBFO	75.00
• 112 or 128 kbps, 224 or 256 kbps, 336 or 384 kbps, 448 or 512 kbps, and 672 or 768 kbps		
- First PVC	NRBF1	250.00
- Each additional PVC	NRBF2	20.00
- Subsequent PVC(s) order charge, per order[1]	NRBFO	75.00
• 1.544 Mbps		
- First PVC	NRBF1	50.00
- Each additional PVC	NRBF2	20.00
- Subsequent PVC(s) order charge, per order[1]	NRBFO	75.00

[1] When appropriate, the "Each additional PVC" nonrecurring charge applies in addition to the "Subsequent PVC order charge". (M)

Certain material on this page formerly appeared on Page 8-222.
Certain material previously found on this page can now be found on Pages 8-313 and 8-314.

8. ADVANCED COMMUNICATIONS NETWORKS

8.3 FRAME RELAY SERVICE (T)(M)

8.3.5 RATES AND CHARGES

G. 72 Months

4. Network-To-Network Information Transfer (NNIT) (Cont'd) (T)

	USOC	NONRECURRING CHARGE
• 44.736 Mbps		
- First PVC	NRBF1	$250.00
- Each additional PVC	NRBF2	50.00
- Subsequent PVC(s) order charge, per order[1]	NRBFO	75.00

[1] When appropriate, the "Each additional PVC" nonrecurring charge applies in addition to the "Subsequent PVC order charge". (M)

Certain material on this page formerly appeared on Page 8-222.1.
Certain material previously found on this page can now be found on Page 8-315.

8. ADVANCED COMMUNICATIONS NETWORKS

8.3 FRAME RELAY SERVICE
8.3.5 RATES AND CHARGES

G. 72 Months

4. Network-To-Network Information Transfer (NNIT) (Cont'd)

	USOC	MONTHLY RATE	
• 56 or 64 kbps - NNIT, per Port			
- 1 PVC	17TA6	$34.20	
- Vintage			(T)
11/14/94 through 12/13/96		34.19	(T)
- 2 PVCs	17TB6	38.10	
- Vintage			(T)
11/14/94 through 12/13/96		35.85	(T)
- 3 PVCs	17TC6	42.05	
- Vintage			(T)
11/14/94 through 12/13/96		37.51	(T)
- 4 PVCs	17TD6	45.95	
- Vintage			(T)
11/14/94 through 12/13/96		39.18	(T)
- 5 PVCs	17TE6	49.85	
- Vintage			(T)
11/14/94 through 12/13/96		40.83	
- 6 PVCs through 14[1], per PVC	17TG6	0.45	
- 15 PVCs through 24[2], per PVC	17TH6	0.25	
- Vintage			
11/14/94 through 12/13/96		0.14	
- Each additional PVC over 24[3], per PVC	17TJ6	0.25	
- Vintage			
11/14/94 through 12/13/96		0.06	

[1] For each PVC over 5, up to and including 14, add this rate to the monthly rate for 5 PVCs. (T)

[2] For each PVC over 14, up to and including 24, add this rate to the total monthly rate for 14 PVCs. (T)

[3] For each PVC over 24 add this rate to the total monthly rate for 24 PVCs. (T)

8. ADVANCED COMMUNICATIONS NETWORKS

8.3 FRAME RELAY SERVICE
8.3.5 RATES AND CHARGES

G. 72 Months

4. Network-To-Network Information Transfer (NNIT) (Cont'd)

	USOC	MONTHLY RATE	
• 112 or 128 kbps - NNIT, per Port			
- 1 PVC	17TA6	$76.50	
- Vintage			(T)
11/14/94 through 12/13/96		44.77	(T)
- 2 PVCs	17TB6	79.20	
- Vintage			(T)
11/14/94 through 12/13/96		47.92	(T)
- 3 PVCs	17TC6	81.90	
- Vintage			(T)
11/14/94 through 12/13/96		51.08	(T)
- 4 PVCs	17TD6	84.60	
- Vintage			(T)
11/14/94 through 12/13/96		54.23	(T)
- 5 PVCs	17TE6	87.30	
- Vintage			(T)
11/14/94 through 12/13/96		57.37	
- 6 PVCs through 14[1], per PVC	17TG6	1.10	
- 15 PVCs through 24[2], per PVC	17TH6	0.75	
- Vintage			
11/14/94 through 12/13/96		0.30	
- Each additional PVC over 24[3], per PVC	17TJ6	0.45	
- Vintage			
11/14/94 through 12/13/96		0.11	

[1] For each PVC over 5, up to and including 14, add this rate to the monthly rate for 5 PVCs. (T)

[2] For each PVC over 14, up to and including 24, add this rate to the total monthly rate for 14 PVCs. (T)

[3] For each PVC over 24 add this rate to the total monthly rate for 24 PVCs. (T)

8. ADVANCED COMMUNICATIONS NETWORKS

8.3 FRAME RELAY SERVICE
8.3.5 RATES AND CHARGES

G. 72 Months

4. Network-To-Network Information Transfer (NNIT) (Cont'd)

	USOC	MONTHLY RATE	
• 224 or 256 kbps - NNIT, per Port			
- 1 PVC	17TA6	$112.50	
- Vintage			(T)
11/14/94 through 12/13/96		67.10	(T)
- 2 PVCs	17TB6	117.90	
- Vintage			(T)
11/14/94 through 12/13/96		73.15	(T)
- 3 PVCs	17TC6	123.30	
- Vintage			(T)
11/14/94 through 12/13/96		79.17	(T)
- 4 PVCs	17TD6	128.70	
- Vintage			(T)
11/14/94 through 12/13/96		85.20	(T)
- 5 PVCs	17TE6	134.10	
- Vintage			(T)
11/14/94 through 12/13/96		91.22	
- 6 PVCs through 14[1], per PVC	17TG6	2.10	
- 15 PVCs through 24[2], per PVC	17TH6	1.50	
- Vintage			
11/14/94 through 12/13/96		0.55	
- Each additional PVC over 24[3], per PVC	17TJ6	0.45	
- Vintage			
11/14/94 through 12/13/96		0.21	

[1] For each PVC over 5, up to and including 14, add this rate to the monthly rate for 5 PVCs. (T)

[2] For each PVC over 14, up to and including 24, add this rate to the total monthly rate for 14 PVCs. (T)

[3] For each PVC over 24 add this rate to the total monthly rate for 24 PVCs. (T)

8. ADVANCED COMMUNICATIONS NETWORKS

8.3 FRAME RELAY SERVICE
8.3.5 RATES AND CHARGES

G. 72 Months

4. Network-To-Network Information Transfer (NNIT) (Cont'd)

	USOC	MONTHLY RATE	
• 336 or 384 kbps - NNIT, per Port			
- 1 PVC	17TA6	$153.00	
- Vintage			(T)
11/14/94 through 12/13/96		89.43	(T)
- 2 PVCs	17TB6	160.90	
- Vintage			(T)
11/14/94 through 12/13/96		98.34	(T)
- 3 PVCs	17TC6	168.75	
- Vintage			(T)
11/14/94 through 12/13/96		107.24	(T)
- 4 PVCs	17TD6	176.65	
- Vintage			(T)
11/14/94 through 12/13/96		116.15	(T)
- 5 PVCs	17TE6	184.50	
- Vintage			(T)
11/14/94 through 12/13/96		125.04	
- 6 PVCs through 14[1], per PVC	17TG6	3.15	
- 15 PVCs through 24[2], per PVC	17TH6	2.25	
- Vintage			
11/14/94 through 12/13/96		0.83	
- Each additional PVC over 24[3], per PVC	17TJ6	0.45	
- Vintage			
11/14/94 through 12/13/96		0.30	

[1] For each PVC over 5, up to and including 14, add this rate to the monthly rate for 5 PVCs. (T)

[2] For each PVC over 14, up to and including 24, add this rate to the total monthly rate for 14 PVCs. (T)

[3] For each PVC over 24 add this rate to the total monthly rate for 24 PVCs. (T)

8. ADVANCED COMMUNICATIONS NETWORKS

8.3 FRAME RELAY SERVICE
8.3.5 RATES AND CHARGES

G. 72 Months

4. Network-To-Network Information Transfer (NNIT) (Cont'd)

	USOC	MONTHLY RATE	
• 448 or 512 kbps - NNIT, per Port			
- 1 PVC	17TA6	$184.50	
- Vintage			(T)
11/14/94 through 12/13/96		111.76	(T)
- 2 PVCs	17TB6	193.05	
- Vintage			(T)
11/14/94 through 12/13/96		123.55	(T)
- 3 PVCs	17TC6	201.60	
- Vintage			(T)
11/14/94 through 12/13/96		135.33	(T)
- 4 PVCs	17TD6	210.15	
- Vintage			(T)
11/14/94 through 12/13/96		147.11	(T)
- 5 PVCs	17TE6	218.70	
- Vintage			(T)
11/14/94 through 12/13/96		158.89	
- 6 PVCs through 14[1], per PVC	17TG6	3.40	
- 15 PVCs through 24[2], per PVC	17TH6	2.25	
- Vintage			
11/14/94 through 12/13/96		1.10	
- Each additional PVC over 24[3], per PVC	17TJ6	0.45	
- Vintage			
11/14/94 through 12/13/96		0.41	

[1] For each PVC over 5, up to and including 14, add this rate to the monthly rate for 5 PVCs. (T)

[2] For each PVC over 14, up to and including 24, add this rate to the total monthly rate for 14 PVCs. (T)

[3] For each PVC over 24 add this rate to the total monthly rate for 24 PVCs. (T)

8. ADVANCED COMMUNICATIONS NETWORKS

8.3 FRAME RELAY SERVICE
8.3.5 RATES AND CHARGES

G. 72 Months

4. Network-To-Network Information Transfer (NNIT) (Cont'd)

	USOC	MONTHLY RATE	
• 672 or 768 kbps - NNIT, per Port			
- 1 PVC	17TA6	$252.00	
- Vintage			(T)
11/14/94 through 12/13/96		157.09	(T)
- 2 PVCs	17TB6	263.70	
- Vintage			(T)
11/14/94 through 12/13/96		175.27	(T)
- 3 PVCs	17TC6	275.40	
- Vintage			(T)
11/14/94 through 12/13/96		193.45	(T)
- 4 PVCs	17TD6	287.10	
- Vintage			(T)
11/14/94 through 12/13/96		211.62	(T)
- 5 PVCs	17TE6	298.80	
- Vintage			(T)
11/14/94 through 12/13/96		229.80	
- 6 PVCs through 14[1], per PVC	17TG6	3.40	
- 15 PVCs through 24[2], per PVC	17TH6	2.25	
- Each additional PVC over 24[3], per PVC	17TJ6	0.45	

[1] For each PVC over 5, up to and including 14, add this rate to the monthly rate for 5 PVCs. (T)

[2] For each PVC over 14, up to and including 24, add this rate to the total monthly rate for 14 PVCs. (T)

[3] For each PVC over 24 add this rate to the total monthly rate for 24 PVCs. (T)

8. ADVANCED COMMUNICATIONS NETWORKS

8.3 FRAME RELAY SERVICE
8.3.5 RATES AND CHARGES

G. 72 Months

4. Network-To-Network Information Transfer (NNIT) (Cont'd)

	USOC	MONTHLY RATE	
• 1.544 Mbps - NNIT, per Port			
- 1 PVC	17TA6	$189.00	
- Vintage			(T)
11/14/94 through 12/13/96		104.72	(T)
- 2 PVCs	17TB6	222.30	
- Vintage			(T)
11/14/94 through 12/13/96		154.14	(T)
- 3 PVCs	17TC6	255.60	
- Vintage			(T)
11/14/94 through 12/13/96		203.57	(T)
- 4 PVCs	17TD6	288.90	
- Vintage			(T)
11/14/94 through 12/13/96		252.98	(T)
- 5 PVCs	17TE6	322.20	
- Vintage			(T)
11/14/94 through 12/13/96		302.41	
- 6 PVCs through 14[1], per PVC	17TG6	17.10	
- 15 PVCs through 24[2], per PVC	17TH6	4.50	
- Vintage			
11/14/94 through 12/13/96		4.06	
- Each additional PVC over 24[3], per PVC	17TJ6	0.45	
- Vintage			
11/14/94 through 12/13/96		0.14	

[1] For each PVC over 5, up to and including 14, add this rate to the monthly rate for 5 PVCs. (T)

[2] For each PVC over 14, up to and including 24, add this rate to the total monthly rate for 14 PVCs. (T)

[3] For each PVC over 24 add this rate to the total monthly rate for 24 PVCs. (T)

8. ADVANCED COMMUNICATIONS NETWORKS

8.3 FRAME RELAY SERVICE (T)(M)

8.3.5 RATES AND CHARGES

G. 72 Months

4. Network-To-Network Information Transfer (NNIT) (Cont'd) (T)

	USOC	MONTHLY RATE
• 44.736 Mbps - NNIT, per Port		
- 1 PVC	17TU6	$3,420.00
- 2 PVCs through 50[1], per PVC	17TV6	27.00
- 51 PVCs through 140[2], per PVC	17TW6	7.20
- 141 PVCs through 240[3], per PVC	17TY6	3.60
- 241 PVCs through 500[4], per PVC	17TZ6	1.80

[1] For each PVC over 1, up to and including 50, add this rate to the monthly rate for 1 PVC.
[2] For each PVC over 50, up to and including 140, add this rate to the total monthly rate for 50 PVCs.
[3] For each PVC over 140, up to and including 240, add this rate to the total monthly rate for 140 PVCs.
[4] For each PVC over 240, up to and including 500, add this rate to the total monthly rate for 240 PVCs. (M)

Certain material on this page formerly appeared on Page 8-226.1.
Certain material previously found on this page can now be found on Pages 8-354 and 8-355.

8. ADVANCED COMMUNICATIONS NETWORKS

8.3 FRAME RELAY SERVICE
8.3.5 RATES AND CHARGES

G. 72 Months (Cont'd)

	USOC	NONRECURRING CHARGE	MONTHLY RATE
5. Central Office Connecting Channel			
• Per connection between a Multiplexer and FRS Port or between a Company facility port and an FRS Port			
- For speeds up to 1.544 Mbps	CU8AR	$25.00	$ 0.59
- For speeds up to 44.736 Mbps	CU8AR	50.00	9.00
6. Transport Channels	N/A	[1]	[1]
7. Optional Features and Functions			
• Customer Network Management (CNM)			
- Per workstation registered address initial setup	NM6X6	15.00	60.30
- Subsequent CNM order charge, per workstation registered address change or addition of CNM to existing FRS[2]	NR9FM	38.00	–

[1] See Section 7 and/or 17 for Transport Channel rates and regulations. (C)

[2] When adding CNM to existing FRS, the Subsequent CNM Order Charge applies in addition to the Nonrecurring Charge for the initial setup of CNM.

8. ADVANCED COMMUNICATIONS NETWORKS

8.3 FRAME RELAY SERVICE (S-y)

8.3.5 RATES AND CHARGES

G. 72 Months

7. Optional Features and Functions (Cont'd)

	USOC	NONRECURRING CHARGE	MONTHLY RATE	
• Priority UNIT PVC[1] (Grandfathered), per PVC				(S-y) (C-y)
- 56 or 64 kbps	PV7X6	$50.00	$4.50	(S-y)
- 112 or 128 kbps	PV7X6	50.00	5.25	
- 224 or 256 kbps	PV7X6	50.00	6.00	
- 336 or 384 kbps	PV7X6	50.00	6.75	
- 448 or 512 kbps	PV7X6	50.00	7.50	
- 672 or 768 kbps	PV7X6	50.00	8.25	
- 1.544 Mbps	PV7X6	50.00	9.00	
- 44.736 Mbps	PV7X6	50.00	9.00	

[1] Priority PVC rates and charges apply in addition to the UNIT PVC rates and charges set forth preceding. (S-y)

(y) Reissued matter filed under Transmittal No. 28, to become effective December 6, 2000.

(Filed under Transmittal 30.)

8. ADVANCED COMMUNICATIONS NETWORKS

8.3 FRAME RELAY SERVICE (T-y)
8.3.5 RATES AND CHARGES (Cont'd) (T-y)

(D-y)

(y) Reissued matter filed under Transmittal No. 28, to become effective December 6, 2000.

(Filed under Transmittal 30.)

8. ADVANCED COMMUNICATIONS NETWORKS

8.3 FRAME RELAY SERVICE
8.3.5 RATES AND CHARGES (Cont'd)

H. 84 Months

	USOC	NONRECURRING CHARGE	MONTHLY RATE	
1. Access Link, per Access Link				
• 56 or 64 kbps	L7AX7	$450.00	$ 65.00	
- Vintage				(T)
11/14/94 through 12/13/96			36.68	(T)
				(D)
12/14/96 through 12/13/01			42.30	(T)
• 1.544 Mbps[1]	L7AX7	450.00	113.85	(T)
				(D)
2. Stand-Alone Access Link per Access Link				
• 56 or 64 kbps	NNLX7	450.00	65.00	
- Vintage				(T)
11/14/94 through 12/13/96			36.68	
12/14/96 through 12/13/01			42.30	
• 1.544 Mbps[1]	NNLX7	450.00	113.85	(T)

(D)

[1] The nonrecurring charge will not apply to customers who qualify for the Volume NRC Waiver as set forth in 8.3.4.A., preceding. (T)

8. ADVANCED COMMUNICATIONS NETWORKS

8.3 FRAME RELAY SERVICE (T)(M)
8.3.5 RATES AND CHARGES
H. 84 Months (Cont'd) (T)

3. User-To-Network Information Transfer (UNIT)

	USOC	NONRECURRING CHARGE	
• 56 or 64 kbps			
- First PVC	NRBF1	$50.00	
- Each additional PVC	NRBF2	20.00	
- Subsequent PVC(s) order charge, per order[1]	NRBFO	75.00	(T)

[1] When appropriate, the "Each additional PVC" nonrecurring charge applies in addition to the "Subsequent PVC order charge". (T) (M)

Certain material on this page formerly appeared on Page 8-230.
Certain material previously found on this page can now be found on Pages 8-365 and 8-366.

8. ADVANCED COMMUNICATIONS NETWORKS

8.3 FRAME RELAY SERVICE
8.3.5 RATES AND CHARGES

H. 84 Months

3. User-To-Network Information Transfer (UNIT) (Cont'd)

	USOC	NONRECURRING CHARGE	
• 112 or 128 kbps, 224 or 256 kbps, 336 or 384 kbps, 448 or 512 kbps, and 672 or 768 kbps			
- First PVC	NRBF1	$250.00	
- Each additional PVC	NRBF2	20.00	
- Subsequent PVC(s) order charge, per order[1]	NRBFO	75.00	
• 1.544 Mbps			
- First PVC[2]	NRBF1	50.00	(C)
- Each additional PVC[2]	NRBF2	20.00	(C)
- Subsequent PVC(s) order charge, per order[1]	NRBFO	75.00	

[1] When appropriate, the "Each additional PVC" nonrecurring charge applies in addition to the "Subsequent PVC order charge".

[2] This nonrecurring charge will not apply to customers who qualify for the Volume NRC Waiver as set forth in 8.3.4.A., preceding. (N) (N)

8. ADVANCED COMMUNICATIONS NETWORKS

8.3 FRAME RELAY SERVICE
8.3.5 RATES AND CHARGES

H. 84 Months

3. User-To-Network Information Transfer (UNIT) (Cont'd)

	USOC	NONRECURRING CHARGE	
• 44.736 Mbps			
- First PVC[2]	NRBF1	$250.00	(C)
- Each additional PVC[2]	NRBF2	50.00	(C)
- Subsequent PVC(s) order charge, per order[1]	NRBFO	75.00	
• Fault Tolerant Service (Grandfathered), per UNIT			
- Initial Service Establishment	NRBF4	500.00	
- Subsequent Service Establishment	NRBF5	50.00	
- Activation and Restoral	NRBF6	500.00	

[1] When appropriate, the "Each additional PVC" nonrecurring charge applies in addition to the "Subsequent PVC order charge".

[2] This nonrecurring charge will not apply to customers who qualify for the Volume NRC Waiver as set forth in 8.3.4.A., preceding. (N) (N)

8. ADVANCED COMMUNICATIONS NETWORKS

8.3 FRAME RELAY SERVICE
8.3.5 RATES AND CHARGES

H. 84 Months

3. User-To-Network Information Transfer (UNIT) (Cont'd)

	USOC	MONTHLY RATE	
• 56 or 64 kbps - UNIT, per Port			
- 0 PVCs, used with Fault Tolerant Service	17T97	$31.50	
- 1 PVC	17TA7	35.35	
- 2 PVCs	17TB7	40.08	
- 3 PVCs	17TC7	43.01	
- 4 PVCs	17TD7	45.95	
- 5 PVCs	17TE7	48.86	
- 6 PVCs through 14[1], per PVC	17TG7	1.12	(D)
- 15 PVCs through 24[2], per PVC	17TH7	0.24	(T) (D)
- Each additional PVC over 24[3], per PVC	17TJ7	0.25	(T)
- Vintage			(T) (D)
11/14/94 through 12/13/96		0.10	(T)

[1] For each PVC over 5, up to and including 14, add this rate to the monthly rate for 5 PVCs. (D)

[2] For each PVC over 14, up to and including 24, add this rate to the total monthly rate for 14 PVCs. (T)

[3] For each PVC over 24 add this rate to the total monthly rate for 24 PVCs. (T)

8. ADVANCED COMMUNICATIONS NETWORKS

8.3 FRAME RELAY SERVICE
8.3.5 RATES AND CHARGES

H. 84 Months

3. User-To-Network Information Transfer (UNIT) (Cont'd)

	USOC	MONTHLY RATE	
• 112 or 128 kbps - UNIT, per Port			
- 1 PVC	17TA7	$108.00	
- Vintage			(T)
11/14/94 through 12/13/96		63.82	(T)
- 2 PVCs	17TB7	110.70	
- Vintage			(T)
11/14/94 through 12/13/96		66.97	(T)
- 3 PVCs	17TC7	113.40	
- Vintage			(T)
11/14/94 through 12/13/96		70.12	(T)
- 4 PVCs	17TD7	116.10	
- Vintage			(T)
11/14/94 through 12/13/96		73.28	(T)
- 5 PVCs	17TE7	118.80	
- Vintage			(T)
11/14/94 through 12/13/96		76.42	
- 6 PVCs through 14[1], per PVC	17TG7	1.10	
- 15 PVCs through 24[2], per PVC	17TH7	0.75	
- Vintage			
11/14/94 through 12/13/96		0.41	
- Each additional PVC over 24[3], per PVC	17TJ7	0.45	
- Vintage			
11/14/94 through 12/13/96		0.17	

[1] For each PVC over 5, up to and including 14, add this rate to the monthly rate for 5 PVCs. (T)

[2] For each PVC over 14, up to and including 24, add this rate to the total monthly rate for 14 PVCs. (T)

[3] For each PVC over 24 add this rate to the total monthly rate for 24 PVCs. (T)

8. ADVANCED COMMUNICATIONS NETWORKS

8.3 FRAME RELAY SERVICE
8.3.5 RATES AND CHARGES

H. 84 Months

3. User-To-Network Information Transfer (UNIT) (Cont'd)

	USOC	MONTHLY RATE	
• 224 or 256 kbps - UNIT, per Port			
- 1 PVC	17TA7	$144.00	
- Vintage			(T)
11/14/94 through 12/13/96		86.15	(T)
- 2 PVCs	17TB7	149.40	
- Vintage			(T)
11/14/94 through 12/13/96		92.19	(T)
- 3 PVCs	17TC7	154.80	
- Vintage			(T)
11/14/94 through 12/13/96		98.22	(T)
- 4 PVCs	17TD7	160.20	
- Vintage			(T)
11/14/94 through 12/13/96		104.25	(T)
- 5 PVCs	17TE7	165.60	
- Vintage			(T)
11/14/94 through 12/13/96		110.27	
- 6 PVCs through 14[1], per PVC	17TG7	2.10	
- 15 PVCs through 24[2], per PVC	17TH7	1.50	
- Vintage			
11/14/94 through 12/13/96		0.92	
- Each additional PVC over 24[3], per PVC	17TJ7	0.45	
- Vintage			
11/14/94 through 12/13/96		0.34	

[1] For each PVC over 5, up to and including 14, add this rate to the monthly rate for 5 PVCs. (T)

[2] For each PVC over 14, up to and including 24, add this rate to the total monthly rate for 14 PVCs. (T)

[3] For each PVC over 24 add this rate to the total monthly rate for 24 PVCs. (T)

8. ADVANCED COMMUNICATIONS NETWORKS

8.3 FRAME RELAY SERVICE
8.3.5 RATES AND CHARGES

H. 84 Months

3. User-To-Network Information Transfer (UNIT) (Cont'd)

	USOC	MONTHLY RATE	
• 336 or 384 kbps - UNIT, per Port			
- 1 PVC	17TA7	$180.00	
- Vintage			(T)
11/14/94 through 12/13/96		108.48	(T)
- 2 PVCs	17TB7	187.90	
- Vintage			(T)
11/14/94 through 12/13/96		117.39	(T)
- 3 PVCs	17TC7	195.75	
- Vintage			(T)
11/14/94 through 12/13/96		126.30	(T)
- 4 PVCs	17TD7	203.65	
- Vintage			(T)
11/14/94 through 12/13/96		135.99	(T)
- 5 PVCs	17TE7	211.50	
- Vintage			(T)
11/14/94 through 12/13/96		145.68	
- 6 PVCs through 14[1], per PVC	17TG7	3.15	
- 15 PVCs through 24[2], per PVC	17TH7	2.25	
- Vintage			
11/14/94 through 12/13/96		1.37	
- Each additional PVC over 24[3], per PVC	17TJ7	0.45	

[1] For each PVC over 5, up to and including 14, add this rate to the monthly rate for 5 PVCs. (T)

[2] For each PVC over 14, up to and including 24, add this rate to the total monthly rate for 14 PVCs. (T)

[3] For each PVC over 24 add this rate to the total monthly rate for 24 PVCs. (T)

8. ADVANCED COMMUNICATIONS NETWORKS

8.3 FRAME RELAY SERVICE
8.3.5 RATES AND CHARGES

H. 84 Months

3. User-To-Network Information Transfer (UNIT) (Cont'd)

	USOC	MONTHLY RATE	
• 448 or 512 kbps - UNIT, per Port			
- 1 PVC	17TA7	$211.50	
- Vintage			(T)
11/14/94 through 12/13/96		130.82	(T)
- 2 PVCs	17TB7	220.05	
- Vintage			(T)
11/14/94 through 12/13/96		142.60	(T)
- 3 PVCs	17TC7	228.60	
- Vintage			(T)
11/14/94 through 12/13/96		154.38	(T)
- 4 PVCs	17TD7	237.15	
- Vintage			(T)
11/14/94 through 12/13/96		168.68	(T)
- 5 PVCs	17TE7	245.70	
- Vintage			(T)
11/14/94 through 12/13/96		182.97	
- 6 PVCs through 14[1], per PVC	17TG7	3.40	
- 15 PVCs through 24[2], per PVC	17TH7	2.25	
- Vintage			
11/14/94 through 12/13/96		1.83	
- Each additional PVC over 24[3], per PVC	17TJ7	0.45	

[1] For each PVC over 5, up to and including 14, add this rate to the monthly rate for 5 PVCs. (T)

[2] For each PVC over 14, up to and including 24, add this rate to the total monthly rate for 14 PVCs. (T)

[3] For each PVC over 24 add this rate to the total monthly rate for 24 PVCs. (T)

8. ADVANCED COMMUNICATIONS NETWORKS

8.3 FRAME RELAY SERVICE
8.3.5 RATES AND CHARGES

H. 84 Months

3. User-To-Network Information Transfer (UNIT) (Cont'd)

	USOC	MONTHLY RATE	
• 672 or 768 kbps - UNIT, per Port			
- 1 PVC	17TA7	$279.00	
- Vintage			(T)
11/14/94 through 12/13/96		176.14	(T)
- 2 PVCs	17TB7	291.60	
- Vintage			(T)
11/14/94 through 12/13/96		194.32	(T)
- 3 PVCs	17TC7	304.20	
- Vintage			(T)
11/14/94 through 12/13/96		212.49	(T)
- 4 PVCs	17TD7	316.80	
- Vintage			(T)
11/14/94 through 12/13/96		233.38	(T)
- 5 PVCs	17TE7	329.40	
- Vintage			(T)
11/14/94 through 12/13/96		254.29	
- 6 PVCs through 14[1], per PVC	17TG7	3.60	
- 15 PVCs through 24[2], per PVC	17TH7	2.50	
- Each additional PVC over 24[3], per PVC	17TJ7	0.75	

[1] For each PVC over 5, up to and including 14, add this rate to the monthly rate for 5 PVCs. (T)

[2] For each PVC over 14, up to and including 24, add this rate to the total monthly rate for 14 PVCs. (T)

[3] For each PVC over 24 add this rate to the total monthly rate for 24 PVCs. (T)

8. ADVANCED COMMUNICATIONS NETWORKS

8.3 FRAME RELAY SERVICE
8.3.5 RATES AND CHARGES

H. 84 Months

3. User-To-Network Information Transfer (UNIT) (Cont'd)

	USOC	MONTHLY RATE	
• 1.544 Mbps - UNIT, per Port			
- 0 PVCs, used with Fault Tolerant Service	17T97	$193.50	
- 1 PVC	17TA7	216.00	
- Vintage			(T)
11/14/94 through 12/13/96		123.77	(T)
- 2 PVCs	17TB7	249.30	
- Vintage			(T)
11/14/94 through 12/13/96		173.89	(T)
- 3 PVCs	17TC7	282.60	
- Vintage			(T)
11/14/94 through 12/13/96		224.02	(T)
- 4 PVCs	17TD7	315.90	
- Vintage			(T)
11/14/94 through 12/13/96		273.44	(T)
- 5 PVCs	17TE7	349.20	
- Vintage			(T)
11/14/94 through 12/13/96		322.86	
- 6 PVCs through 14[1], per PVC	17TG7	17.10	(T)
			(D)
- 15 PVCs through 24[2], per PVC	17TH7	4.50	(T)
- Each additional PVC over 24[3], per PVC	17TJ7	0.45	
- Vintage			
11/14/94 through 12/13/96		0.23	

[1] For each PVC over 5, up to and including 14, add this rate to the monthly rate for 5 PVCs. (T)

(D)

[2] For each PVC over 14, up to and including 24, add this rate to the total monthly rate for 14 PVCs. (T)

[3] For each PVC over 24 add this rate to the total monthly rate for 24 PVCs. (T)

8. ADVANCED COMMUNICATIONS NETWORKS

8.3 FRAME RELAY SERVICE (T)(M)

8.3.5 RATES AND CHARGES

H. 84 Months

3. User-To-Network Information Transfer (UNIT) (Cont'd) (T)

	USOC	MONTHLY RATE
• 44.736 Mbps - UNIT, per Port		
- 0 PVCs, used with Fault Tolerant Service	17T97	$3,150.00
- 1 PVC	17TU7	3,420.00
- 2 PVCs through 50[1], per PVC	17TV7	27.00
- 51 PVCs through 140[2], per PVC	17TW7	7.20
- 141 PVCs through 240[3], per PVC	17TY7	3.60
- 241 PVCs through 500[4], per PVC	17TZ7	1.80

[1] For each PVC over 1, up to and including 50, add this rate to the monthly rate for 1 PVC.
[2] For each PVC over 50, up to and including 140, add this rate to the total monthly rate for 50 PVCs.
[3] For each PVC over 140, up to and including 240, add this rate to the total monthly rate for 140 PVCs.
[4] For each PVC over 240, up to and including 500, add this rate to the total monthly rate for 240 PVCs. (M)

Certain material on this page formerly appeared on Page 8-236.
Certain material previously found on this page can now be found on Pages 8-388 and 8-389.

8. ADVANCED COMMUNICATIONS NETWORKS

8.3 FRAME RELAY SERVICE (T)(M)
8.3.5 RATES AND CHARGES (T)

H. 84 Months (Cont'd)

4. Network-To-Network Information Transfer (NNIT)

	USOC	NONRECURRING CHARGE
• 56 or 64 kbps		
- First PVC	NRBF1	$50.00
- Each additional PVC	NRBF2	20.00
- Subsequent PVC(s) order charge, per order[1]	NRBFO	75.00
• 112 or 128 kbps, 224 or 256 kbps, 336 or 384 kbps, 448 or 512 kbps, and 672 or 768 kbps		
- First PVC	NRBF1	250.00
- Each additional PVC	NRBF2	20.00
- Subsequent PVC(s) order charge, per order[1]	NRBFO	75.00
• 1.544 Mbps		
- First PVC	NRBF1	50.00
- Each additional PVC	NRBF2	20.00
- Subsequent PVC(s) order charge, per order[1]	NRBFO	75.00

[1] When appropriate, the "Each additional PVC" nonrecurring charge applies in addition to the "Subsequent PVC order charge". (M)

Certain material on this page formerly appeared on Page 8-237.
Certain material previously found on this page can now be found on Pages 8-389, 8-390, 8-391 and 8-392.

8. ADVANCED COMMUNICATIONS NETWORKS

8.3 FRAME RELAY SERVICE (T)(M)

8.3.5 RATES AND CHARGES

H. 84 Months

4. Network-To-Network Information Transfer (NNIT) (Cont'd) (T)

	USOC	NONRECURRING CHARGE
• 44.736 Mbps		
- First PVC	NRBF1	$250.00
- Each additional PVC	NRBF2	50.00
- Subsequent PVC(s) order charge, per order[1]	NRBFO	75.00

[1] When appropriate, the "Each additional PVC" nonrecurring charge applies in addition to the "Subsequent PVC order charge". (M)

Certain material on this page formerly appeared on Page 8-237.1.
Certain material previously found on this page can now be found on Pages 8-393, 8-394, and 8-395.

8. ADVANCED COMMUNICATIONS NETWORKS

8.3 FRAME RELAY SERVICE
8.3.5 RATES AND CHARGES

H. 84 Months

4. Network-To-Network Information Transfer (NNIT) (Cont'd)

	USOC	MONTHLY RATE	
• 56 or 64 kbps - NNIT, per Port			
- 1 PVC	17TA7	$34.20	
- Vintage			(T)
11/14/94 through 12/13/96		34.19	(T)
- 2 PVCs	17TB7	38.10	
- Vintage			(T)
11/14/94 through 12/13/96		35.85	(T)
- 3 PVCs	17TC7	42.05	
- Vintage			(T)
11/14/94 through 12/13/96		37.51	(T)
- 4 PVCs	17TD7	45.95	
- Vintage			(T)
11/14/94 through 12/13/96		39.18	(T)
- 5 PVCs	17TE7	49.85	
- Vintage			(T)
11/14/94 through 12/13/96		40.83	(T)
- 6 PVCs through 14[1], per PVC	17TG7	0.45	(T)
- 15 PVCs through 24[2], per PVC	17TH7	0.25	
- Vintage			
11/14/94 through 12/13/96		0.14	
- Each additional PVC over 24[3], per PVC	17TJ7	0.25	
- Vintage			
11/14/94 through 12/13/96		0.06	

[1] For each PVC over 5, up to and including 14, add this rate to the monthly rate for 5 PVCs. (T)

[2] For each PVC over 14, up to and including 24, add this rate to the total monthly rate for 14 PVCs. (T)

[3] For each PVC over 24 add this rate to the total monthly rate for 24 PVCs. (T)

8. ADVANCED COMMUNICATIONS NETWORKS

8.3 FRAME RELAY SERVICE
8.3.5 RATES AND CHARGES

H. 84 Months

4. Network-To-Network Information Transfer (NNIT) (Cont'd)

	USOC	MONTHLY RATE	
• 112 or 128 kbps - NNIT, per Port			
- 1 PVC	17TA7	$76.50	
- Vintage			(T)
11/14/94 through 12/13/96		44.77	(T)
- 2 PVCs	17TB7	79.20	
- Vintage			(T)
11/14/94 through 12/13/96		47.92	(T)
- 3 PVCs	17TC7	81.90	
- Vintage			(T)
11/14/94 through 12/13/96		51.08	(T)
- 4 PVCs	17TD7	84.60	
- Vintage			(T)
11/14/94 through 12/13/96		54.23	(T)
- 5 PVCs	17TE7	87.30	
- Vintage			(T)
11/14/94 through 12/13/96		57.37	
- 6 PVCs through 14[1], per PVC	17TG7	1.10	
- 15 PVCs through 24[2], per PVC	17TH7	0.75	
- Vintage			
11/14/94 through 12/13/96		0.30	
- Each additional PVC over 24[3], per PVC	17TJ7	0.45	
- Vintage			
11/14/94 through 12/13/96		0.11	

[1] For each PVC over 5, up to and including 14, add this rate to the monthly rate for 5 PVCs. (T)

[2] For each PVC over 14, up to and including 24, add this rate to the total monthly rate for 14 PVCs. (T)

[3] For each PVC over 24 add this rate to the total monthly rate for 24 PVCs. (T)

8. ADVANCED COMMUNICATIONS NETWORKS

8.3 FRAME RELAY SERVICE
8.3.5 RATES AND CHARGES

H. 84 Months

4. Network-To-Network Information Transfer (NNIT) (Cont'd)

	USOC	MONTHLY RATE	
• 224 or 256 kbps - NNIT, per Port			
- 1 PVC	17TA7	$112.50	
- Vintage			(T)
11/14/94 through 12/13/96		67.10	(T)
- 2 PVCs	17TB7	117.90	
- Vintage			(T)
11/14/94 through 12/13/96		73.15	(T)
- 3 PVCs	17TC7	123.30	
- Vintage			(T)
11/14/94 through 12/13/96		79.17	(T)
- 4 PVCs	17TD7	128.70	
- Vintage			(T)
11/14/94 through 12/13/96		85.20	(T)
- 5 PVCs	17TE7	134.10	
- Vintage			(T)
11/14/94 through 12/13/96		91.22	
- 6 PVCs through 14[1], per PVC	17TG7	2.10	
- 15 PVCs through 24[2], per PVC	17TH7	1.50	
- Vintage			
11/14/94 through 12/13/96		0.55	
- Each additional PVC over 24[3], per PVC	17TJ7	0.45	
- Vintage			
11/14/94 through 12/13/96		0.21	

[1] For each PVC over 5, up to and including 14, add this rate to the monthly rate for 5 PVCs. (T)

[2] For each PVC over 14, up to and including 24, add this rate to the total monthly rate for 14 PVCs. (T)

[3] For each PVC over 24 add this rate to the total monthly rate for 24 PVCs. (T)

8. ADVANCED COMMUNICATIONS NETWORKS

8.3 FRAME RELAY SERVICE
8.3.5 RATES AND CHARGES

H. 84 Months

4. Network-To-Network Information Transfer (NNIT) (Cont'd)

	USOC	MONTHLY RATE	
• 336 or 384 kbps - NNIT, per Port			
- 1 PVC	17TA7	$153.00	
- Vintage			(T)
11/14/94 through 12/13/96		89.43	(T)
- 2 PVCs	17TB7	160.90	
- Vintage			(T)
11/14/94 through 12/13/96		98.34	(T)
- 3 PVCs	17TC7	168.75	
- Vintage			(T)
11/14/94 through 12/13/96		107.24	(T)
- 4 PVCs	17TD7	176.65	
- Vintage			(T)
11/14/94 through 12/13/96		116.15	(T)
- 5 PVCs	17TE7	184.50	
- Vintage			(T)
11/14/94 through 12/13/96		125.04	
- 6 PVCs through 14[1], per PVC	17TG7	3.15	
- 15 PVCs through 24[2], per PVC	17TH7	2.25	
- Vintage			
11/14/94 through 12/13/96		0.83	
- Each additional PVC over 24[3], per PVC	17TJ7	0.45	
- Vintage			
11/14/94 through 12/13/96		0.30	

[1] For each PVC over 5, up to and including 14, add this rate to the monthly rate for 5 PVCs. (T)

[2] For each PVC over 14, up to and including 24, add this rate to the total monthly rate for 14 PVCs. (T)

[3] For each PVC over 24 add this rate to the total monthly rate for 24 PVCs. (T)

8. ADVANCED COMMUNICATIONS NETWORKS

8.3 FRAME RELAY SERVICE
8.3.5 RATES AND CHARGES

H. 84 Months

4. Network-To-Network Information Transfer (NNIT) (Cont'd)

	USOC	MONTHLY RATE	
• 448 or 512 kbps - NNIT, per Port			
- 1 PVC	17TA7	$184.50	
- Vintage			(T)
11/14/94 through 12/13/96		111.76	(T)
- 2 PVCs	17TB7	193.05	
- Vintage			(T)
11/14/94 through 12/13/96		123.55	(T)
- 3 PVCs	17TC7	201.60	
- Vintage			(T)
11/14/94 through 12/13/96		135.33	(T)
- 4 PVCs	17TD7	210.15	
- Vintage			(T)
11/14/94 through 12/13/96		147.11	(T)
- 5 PVCs	17TE7	218.70	
- Vintage			(T)
11/14/94 through 12/13/96		158.89	
- 6 PVCs through 14[1], per PVC	17TG7	3.40	
- 15 PVCs through 24[2], per PVC	17TH7	2.25	
- Vintage			
11/14/94 through 12/13/96		1.10	
- Each additional PVC over 24[3], per PVC	17TJ7	0.45	
- Vintage			
11/14/94 through 12/13/96		0.41	

[1] For each PVC over 5, up to and including 14, add this rate to the monthly rate for 5 PVCs. (T)

[2] For each PVC over 14, up to and including 24, add this rate to the total monthly rate for 14 PVCs. (T)

[3] For each PVC over 24 add this rate to the total monthly rate for 24 PVCs. (T)

8. ADVANCED COMMUNICATIONS NETWORKS

8.3 FRAME RELAY SERVICE
8.3.5 RATES AND CHARGES

H. 84 Months

4. Network-To-Network Information Transfer (NNIT) (Cont'd)

	USOC	MONTHLY RATE	
• 672 or 768 kbps - NNIT, per Port			
- 1 PVC	17TA7	$252.00	
- Vintage			(T)
11/14/94 through 12/13/96		157.09	(T)
- 2 PVCs	17TB7	263.70	
- Vintage			(T)
11/14/94 through 12/13/96		175.27	(T)
- 3 PVCs	17TC7	275.40	
- Vintage			(T)
11/14/94 through 12/13/96		193.45	(T)
- 4 PVCs	17TD7	287.10	
- Vintage			(T)
11/14/94 through 12/13/96		211.62	(T)
- 5 PVCs	17TE7	298.80	
- Vintage			(T)
11/14/94 through 12/13/96		229.80	
- 6 PVCs through 14[1], per PVC	17TG7	3.40	
- 15 PVCs through 24[2], per PVC	17TH7	2.25	
- Each additional PVC over 24[3], per PVC	17TJ7	0.45	

[1] For each PVC over 5, up to and including 14, add this rate to the monthly rate for 5 PVCs. (T)

[2] For each PVC over 14, up to and including 24, add this rate to the total monthly rate for 14 PVCs. (T)

[3] For each PVC over 24 add this rate to the total monthly rate for 24 PVCs. (T)

8. ADVANCED COMMUNICATIONS NETWORKS

8.3 FRAME RELAY SERVICE
8.3.5 RATES AND CHARGES

H. 84 Months

4. Network-To-Network Information Transfer (NNIT) (Cont'd)

	USOC	MONTHLY RATE	
• 1.544 Mbps - NNIT, per Port			
- 1 PVC	17TA7	$189.00	
- Vintage			(T)
11/14/94 through 12/13/96		104.72	(T)
- 2 PVCs	17TB7	222.30	
- Vintage			(T)
11/14/94 through 12/13/96		154.14	(T)
- 3 PVCs	17TC7	255.60	
- Vintage			(T)
11/14/94 through 12/13/96		203.57	(T)
- 4 PVCs	17TD7	288.90	
- Vintage			(T)
11/14/94 through 12/13/96		252.98	(T)
- 5 PVCs	17TE7	322.20	
- Vintage			(T)
11/14/94 through 12/13/96		302.41	
- 6 PVCs through 14[1], per PVC	17TG7	17.10	
- 15 PVCs through 24[2], per PVC	17TH7	4.50	
- Vintage			
11/14/94 through 12/13/96		4.06	
- Each additional PVC over 24[3], per PVC	17TJ7	0.45	
- Vintage			
11/14/94 through 12/13/96		0.14	

[1] For each PVC over 5, up to and including 14, add this rate to the monthly rate for 5 PVCs. (T)

[2] For each PVC over 14, up to and including 24, add this rate to the total monthly rate for 14 PVCs. (T)

[3] For each PVC over 24 add this rate to the total monthly rate for 24 PVCs. (T)

8. ADVANCED COMMUNICATIONS NETWORKS

8.3 FRAME RELAY SERVICE (T)(M)

8.3.5 RATES AND CHARGES

H. 84 Months

4. Network-To-Network Information Transfer (NNIT) (Cont'd) (T)

	USOC	MONTHLY RATE
• 44.736 Mbps - NNIT, per Port		
- 1 PVC	17TU7	$3,420.00
- 2 PVCs through 50[1], per PVC	17TV7	27.00
- 51 PVCs through 140[2], per PVC	17TW7	7.20
- 141 PVCs through 240[3], per PVC	17TY7	3.60
- 241 PVCs through 500[4], per PVC	17TZ7	1.80

[1] For each PVC over 1, up to and including 50, add this rate to the monthly rate for 1 PVC.
[2] For each PVC over 50, up to and including 140, add this rate to the total monthly rate for 50 PVCs.
[3] For each PVC over 140, up to and including 240, add this rate to the total monthly rate for 140 PVCs.
[4] For each PVC over 240, up to and including 500, add this rate to the total monthly rate for 240 PVCs. (M)

Certain material on this page formerly appeared on Page 8-241.1.
Certain material previously found on this page can now be found on Pages 8-410 and 8-411.

8. ADVANCED COMMUNICATIONS NETWORKS

8.3 FRAME RELAY SERVICE
8.3.5 RATES AND CHARGES

H. 84 Months (Cont'd)

	USOC	NONRECURRING CHARGE	MONTHLY RATE
5. Central Office Connecting Channel			
• Per connection between a Multiplexer and FRS Port or between a Company facility port and an FRS Port			
- For speeds up to 1.544 Mbps	CU8BR	$25.00	$ 0.59
- For speeds up to 44.736 Mbps	CU8BR	50.00	9.00
6. Transport Channels	N/A	[1]	[1]
7. Optional Features and Functions			
• Customer Network Management (CNM)			
- Per workstation registered address initial setup	NM6X7	15.00	60.30
- Subsequent CNM order charge, per workstation registered address change or addition of CNM to existing FRS[2]	NR9FM	38.00	–

[1] See Section 7 and/or 17 for Transport Channel rates and regulations. (C)

[2] When adding CNM to existing FRS, the Subsequent CNM Order Charge applies in addition to the Nonrecurring Charge for the initial setup of CNM.

8. ADVANCED COMMUNICATIONS NETWORKS

8.3 FRAME RELAY SERVICE (S-y)

8.3.5 RATES AND CHARGES

H. 84 Months

7. Optional Features and Functions (Cont'd)

	USOC	NONRECURRING CHARGE	MONTHLY RATE	
• Priority UNIT PVC[1] (Grandfathered), per PVC				(S-y) (C-y)
- 56 or 64 kbps	PV7X7	$50.00	$4.50	(S-y)
- 112 or 128 kbps	PV7X7	50.00	5.25	
- 224 or 256 kbps	PV7X7	50.00	6.00	
- 336 or 384 kbps	PV7X7	50.00	6.75	
- 448 or 512 kbps	PV7X7	50.00	7.50	
- 672 or 768 kbps	PV7X7	50.00	8.25	
- 1.544 Mbps	PV7X7	50.00	9.00	
- 44.736 Mbps	PV7X7	50.00	9.00	

[1] Priority PVC rates and charges apply in addition to the UNIT PVC rates and charges set forth preceding. (S-y)

(y) Reissued matter filed under Transmittal No. 28, to become effective December 6, 2000.

(Filed under Transmittal 30.)

8. ADVANCED COMMUNICATIONS NETWORKS

8.3 FRAME RELAY SERVICE (Cont'd) (T-y)

(D-y)

(y) Reissued matter filed under Transmittal No. 28, to become effective December 6, 2000.

8. ADVANCED COMMUNICATIONS NETWORKS

8.4 *QWEST DSL* SERVICE

8.4.1 GENERAL

A. Description

QWEST DSL Service utilizes Asynchronous Transfer Mode (ATM) technology over dedicated transport facilities, Asymmetrical Digital Subscriber Line (ADSL) technology over a Company-provided metallic local loop at a single physical location and *QWEST DSL* ISDN Digital Subscriber Line Service (IDSL) technology over Company-provided 2-wire, private line facilities to provide customers with high speed data services. Qwest DSL Service is comprised of *QWEST DSL* Service, *QWEST DSL HOST* Service and *QWEST IDSL*.

QWEST DSL Service[1] utilizes customer-provided equipment, located at the (S-y)
customer's premises, and Company-provided equipment, at Company Central
Offices. This equipment allows the Company to accept traffic from the customer (S-y)
and send it bi-directionally. *QWEST DSL* Service is available as one of the
following:

- Standard DSL Service where the Company provides local exchange service and *QWEST DSL* Service on the same local loop. Standard DSL Service is comprised of *Qwest Choice DSL, Qwest DSL 640k, Qwest Choice DSL Deluxe, QWEST DSL PRO DELUXE, QWEST DSL PRO 640KBPS, QWEST DSL PRO 1 MBPS, QWEST DSL PRO 4 MBPS* and *QWEST DSL PRO 7 MBPS* or all Company offered speeds. or

- Stand Alone *Qwest DSL* Service where the Company provides *QWEST DSL* (S-y)
  Service over the local loop. Stand Alone *Qwest DSL* Service is not available as (C-x)
  part of the *QWEST DSL* Volume Plans. (C-x)

Each *QWEST DSL* Service must be connected to a *QWEST DSL HOST* Service. The data connection from the *QWEST DSL* location to the *QWEST DSL HOST* location is a dedicated virtual point-to-point connection across a shared backbone network, ATM Service.

[1] With the deployment of "Discrete Multitone" (DMT) technology April 4, 2001 and (S-y)
with the grandfathering *QWEST DSL SELECT* on June 14, 2001, "Carrierless
Amplitude/Phase Modulation Protocol" (CAP) technology will no longer be
offered as new service. (S-y)

(x) Issued under the authority of Special Permission No. 04-014.
(y) Reissued matter filed under Transmittal No. 186, to become effective February 28, 2004.

8. ADVANCED COMMUNICATIONS NETWORKS

8.4 *QWEST DSL* SERVICE
8.4.1 GENERAL

A. Description (Cont'd)

QWEST IDSL provides a data only, 2-wire, private line service with a bi-directional data transmission capacity of 128 kbps or 144 kbps. Each *QWEST IDSL* must be connected to a *QWEST DSL HOST* Service. The data connection from the *QWEST IDSL* location to the *QWEST DSL HOST* location is a dedicated virtual point-to-point connection across a shared backbone network, ATM Service. (T)

QWEST DSL HOST Service aggregates multiple data streams into a single host site using peak transmission speeds of 1.544 Mbps, and 3 Mbps up to 45 Mbps, in 3 Mbps increments.

Technical Specifications for *QWEST DSL* Service are delineated in Qwest Corporation Technical Publications PUB 77392 and PUB 77399.

The offering of *QWEST DSL* Service contemplates the use of existing ADSL, IDSL and ATM facilities. There may be occasions where *QWEST DSL* Service is not available due to facility limitations or where it may be necessary to construct such facilities. If Special Construction is involved the regulations as set forth in Tariff F.C.C. No. 2 apply. (T)

8. ADVANCED COMMUNICATIONS NETWORKS

8.4 *QWEST DSL* SERVICE
8.4.1 GENERAL

A. Description (Cont'd)

During the Company's network maintenance and software update period, it may be necessary to temporarily place *QWEST DSL* Service central office equipment out of service. The Company also reserves the right to temporarily interrupt *QWEST DSL* Service at other times in emergency situations.

QWEST DSL Service is available in specific wire center locations where the Company has established ADSL, IDSL and ATM technology as specified in the National Exchange Carrier Association Tariff F.C.C. No. 4. Availability of ADSL or IDSL in a wire center does not guarantee customer access to any or all speeds. (T)

The Company will qualify copper facilities to determine the suitability of such facilities for *QWEST DSL* Service. The Company will not provide *QWEST DSL* Service on copper facilities that are unsuitable for the Service. Nor will the Company provide *QWEST DSL* Service if it determines that such provision will produce interference to other services.

QWEST DSL Service and *QWEST IDSL* Service will be provided subject to the availability and limitations of Company wire centers and outside plant facilities.

The customer is responsible for providing and installing all compatible customer provided equipment (CPE). Compatibility requirements are delineated in Qwest Corporation Technical Publication PUB 77392 and 77399. The modem must support customer-selected services.

8. ADVANCED COMMUNICATIONS NETWORKS

8.4 *QWEST DSL* SERVICE
8.4.1 GENERAL (CONT'D)

B. Service Elements

1. *QWEST DSL* Service Dedicated Connection (C)

   QWEST DSL Service Dedicated Connection provides a communications path between the CO modem and the modem provided by the customer at the customer's premises using ADSL technology. (C)

8. ADVANCED COMMUNICATIONS NETWORKS

8.4 *QWEST DSL* SERVICE
8.4.1 GENERAL

B.1 (Cont'd)

Customers who purchase *QWEST DSL* Service will receive DMT protocol. All *CAP QWEST DSL* Services are grandfathered as of April 4, 2001, except CAP *QWEST DSL SELECT* which is grandfathered as of June 14, 2001. Customers who purchased *QWEST DSL* Service with CAP protocol prior to the respective grandfather dates will retain this service. CAP protocol is not capable of providing the precise service speeds as defined below for DMT protocol.

DMT *QWEST DSL* is available in 5 categories: *Qwest Choice DSL*, *Qwest DSL 640k*, *Qwest Choice DSL Deluxe*, *QWEST DSL PRO* (Professional) and Stand Alone *Qwest DSL*. *QWEST DSL PRO* is available from 256 kbps up to 7 Mbps (Down Stream) and includes Installation and Service Guarantees as set forth in D. and E., following. (C) | (C)

DMT RATE ELEMENTS	DOWN STREAM CONNECTION SPEED	UP STREAM CONNECTON SPEED	TYPE[1]	
Qwest Choice DSL	256 kbps	128 kbps up to 256 kbps	Dedicated	
Qwest DSL 640k	256 up to 640 kbps	128 kbps up to 256 kbps	Dedicated	
Qwest Choice DSL Deluxe	up to 1.5 Mbps	128 kbps up to 1 Mbps	Dedicated	
QWEST DSL PRO DELUXE	256 up to 640 kbps	128 kbps up to 256 kbps	Dedicated	
QWEST DSL PRO 640 KBPS	640 kbps	128 kbps up to 640 kbps	Dedicated	
QWEST DSL PRO 1 MBPS	1.024 Mbps	128 kbps up to 1.024 Mbps	Dedicated	
QWEST DSL PRO 4 MBPS	4.0 Mbps	128 kbps up to 1.024 Mbps	Dedicated	
QWEST DSL PRO 7 MBPS	7.0 Mbps	128 kbps up to 1.024 Mbps	Dedicated	
Stand Alone *Qwest DSL*	up to 1.5 Mbps	128 kbps up to 1 Mbps	Dedicated	(N) (N)

[1] Upstream speeds will be set to allow the maximum speed within the range. Actual connection speed may be limited by the physical condition of the customer's line.

8. ADVANCED COMMUNICATIONS NETWORKS

8.4 *QWEST DSL* SERVICE
8.4.1 GENERAL

B.1 (Cont'd)

CAP *Qwest DSL 640k* and CAP *QWEST DSL PRO* are grandfathered service categories as of April 4, 2001, and CAP *QWEST DSL SELECT* [1] is grandfathered as of June 14, 2001. Existing customers of CAP *QWEST DSL* Services will be able to change the destination of their service, however any other changes, including speed changes, will require the customer to migrate to DMT *QWEST DSL* or completely disconnect service. CAP *QWEST DSL PRO* for existing customers includes Service Guarantees as set forth in 8.4.1. (T)

CAP RATE ELEMENTS	DOWN STREAM CONNECTION SPEED	UP STREAM CONNECTON SPEED	TYPE	
QWEST DSL SELECT	256 up to 640 kbps	272	Per Session	
Qwest DSL 640k	256 up to 640 kbps	272	Dedicated	(T)
QWEST DSL PRO DELUXE	256 up to 640 kbps	272	Dedicated	
QWEST DSL PRO 640 KBPS	640 kbps	544	Dedicated	
QWEST DSL PRO 960 KBPS	960 kbps	816	Dedicated	
QWEST DSL PRO 1.2 MBPS	1.280 Mbps	1088	Dedicated	
QWEST DSL PRO 4 MBPS	4.480 Mbps	1088	Dedicated	
QWEST DSL PRO 7 MBPS	7.168 Mbps	1088	Dedicated	

CAP *QWEST DSL Services* are provided as either dedicated or per session connections. Dedicated connections provide a modem devoted specifically to the customer while per session connections utilize pooled modems, both services while connected offer equivalent performance. (T)

QWEST DSL SELECT is a per session connection. Per session connection customers must vie for a modem in the pool and the potential for a busy state exists. The Company will limit each session connect time, but will ensure a session of no less than one hour but no more than four hours, with all customers having the same maximum session time. The Company will not change the maximum session time more than once a month. A per session connection customer can expect to establish a connection within one to two hours of the initial attempt. (T)

[1] *QWEST DSL SELECT* is provisioned independent of DMT capacity and cannot use Dedicated DMT-based capacity. In the event an order for *QWEST DSL SELECT* Service is delayed for Company reasons, the customer will have the option of subscribing to a new DMT dedicated service and receiving a onetime credit of $30. The $30 credit will only be available if the *QWEST DSL SELECT* is delayed for Company reasons and the order is placed on or before June 13, 2001. This offer may be combined with other *DSL* Promotion.

8. ADVANCED COMMUNICATIONS NETWORKS

8.4 *QWEST DSL* SERVICE
8.4.1 GENERAL

B. Service Elements (Cont'd)

2. *QWEST DSL HOST* Service

a. *QWEST DSL HOST* Ports (BSE) [1]

The *QWEST DSL HOST* Port is a Port on an ATM switch at the serving wire center or *QWEST DSL HOST* Service Point. This element applies in conjunction with the 1.544 Mbps, IMA Ports (3, 4.6, 6.1, 7.7, 9.2, 10.7 & 12.3 Mbps) or 44.736 Mbps Private Line Transport *QWEST DSL HOST* Access Link, and the 44.736 Mbps, 155.52 Mbps or 622 Mbps ATM Optical Access Link. (C)

The types of Ports which may be used with *QWEST DSL HOST* Service are:

- 10BaseT Interface

  A 10BaseT interface connects a customer's *QWEST DSL HOST* (hub) location to a *QWEST DSL HOST* Services Access Link. 10BaseT interfaces are available with peak Port speeds of 1.544 Mbps, 3 Mbps, 6 Mbps, or 9 Mbps.

- 100BaseT Interface

  A 100BaseT interface connects a customer's *QWEST DSL HOST* (hub) location to a *QWEST DSL HOST* Services Access Link. 100BaseT interfaces are available with peak port speeds of 3 Mbps to 44.736 Mbps, in 3 Mbps increments.

[1] A 44.736 Mbps, 155.52 Mbps or 622 Mbps ATM Port may be used by customers with existing ATM Service for a *QWEST DSL HOST* Port. (C)

8. ADVANCED COMMUNICATIONS NETWORKS

8.4 *QWEST DSL* SERVICE
8.4.1 GENERAL

B.2.a.[1] (Cont'd)

- 1.544 Mbps *QWEST DSL HOST* Port

- IMA Ports[1]
  - 3 Mbps
  - 4.6 Mbps
  - 6.1 Mbps
  - 7.7 Mbps
  - 9.2 Mbps
  - 10.7 Mbps
  - 12.3 Mbps

- 44.736 Mbps *QWEST DSL HOST* Port. This port is capable of terminating *QWEST DSL HOST* Access Links with a bandwidth of 3 Mbps up through 44.736 Mbps, in 3 Mbps increments. [2]

  - A 44.736 Mbps ATM Port [1,2]
  - 155.52 Mbps ATM Port [1,2]
  - 622 Mbps ATM Port [1,2] (N)

[1] An ATM IMA Port, ATM 44.736 Mbps Port, ATM 155.52 Mbps Port or ATM 622 (C)
Mbps Port may be used by customers with existing ATM Service for a *QWEST* (C)
DSL HOST Port.

[2] A minimum of one 3 Mbps bandwidth increment applies for each 44.736 Mbps
QWEST DSL HOST Port, and for each 44.736 Mbps, 155.52 Mbps or 622 ATM (C)
Port used for *QWEST DSL HOST* Port. (C)

8. ADVANCED COMMUNICATIONS NETWORKS

8.4 *QWEST DSL* SERVICE
8.4.1 GENERAL

B.2. (Cont'd)

b. *QWEST DSL HOST* Access Links

QWEST DSL HOST Access Links are a physical transport facility that transmits data from the customer site to a *QWEST DSL HOST* Service Point within the ATM Network. *QWEST DSL HOST* Access Links can be comprised of ATM Optical Access Links or Private Line Transport Services. If the serving wire center of the *QWEST DSL HOST* customer location is a *QWEST DSL HOST* Service Point, then Private Line Transport Mileage does not apply. Private Line Transport Services Mileage applies if the serving wire center of the *QWEST DSL HOST* customer location is not a *QWEST DSL HOST* Service Point. If the *QWEST DSL HOST* Access Link is a Meet Point arrangement the Transport Mileage will be calculated to the actual ATM switch location.

The types of *QWEST DSL HOST* Access Links are following:

- A 1.544 Mbps, Clear Channel DS1 Private Line Transport Services Channel Termination, as set forth in Section 7, preceding.

- A 44.736 Mbps DS3 Private Line Transport Services Channel Termination, as set forth in Section 7, preceding.

- A 44.736 Mbps, 155.52 Mbps or 622 Mbps ATM Optical Access Link (OAL). (C)

8. ADVANCED COMMUNICATIONS NETWORKS

8.4 *QWEST DSL* SERVICE
8.4.1 GENERAL

B.2. (Cont'd)

c. Central Office Connecting Channel (COCC)

A COCC provides the ongoing interconnection from the *QWEST DSL HOST* Port to a DS1 or DS3 Service Channel Termination.

d. Service Points

Service Points are geographic locations designated by the Company where the *QWEST DSL HOST* Port can be accessed. The *QWEST DSL HOST* Port utilizes the ATM Service Points, which are listed in the National Exchange Carrier Association Tariff F.C.C. No. 4.

e. Bandwidth

Bandwidth transports *QWEST DSL HOST* data transmission through the ATM Network, at rates from 3 Mbps to 44.736 Mbps, in 3 Mbps increments. A minimum of one 3 Mbps increment of *QWEST DSL HOST* bandwidth is required for each IMA *QWEST DSL HOST* Port, 44.736 Mbps *QWEST DSL HOST* Port or for each 44.736 Mbps ATM Port, 155.52 Mbps ATM Port or 622 (C)
Mbps ATM Port used as a *QWEST DSL HOST* Port. (C)

QWEST DSL HOST Service can terminate/aggregate both DMT and CAP protocol based *QWEST DSL*, ADSL, traffic.

8. ADVANCED COMMUNICATIONS NETWORKS

8.4 *QWEST DSL* SERVICE (T)
8.4.1 GENERAL
B. Service Elements (Cont'd)

3. *QWEST IDSL* (T)

a. Channel Termination

The Channel Termination provides for a data only, 2-wire, private line path between the Customer designated premises and the serving wire center of that premises. Included as a part of the Channel Termination is a standard interface arrangement which defines the technical characteristics associated with the type of facilities to which the access service is to be connected at the Point of Termination (POT) and the type of signaling capability. One Channel Termination charge applies at the serving wire center of the Customer's designated premises where the channel terminates.

8. ADVANCED COMMUNICATIONS NETWORKS

8.4 *QWEST DSL* SERVICE (Cont'd) (T)

8.4.2 REGULATIONS

A. *QWEST DSL HOST* Service (T)

QWEST DSL HOST Service must be initially ordered as one of the fixed service periods as set forth in 8.4.4; however, at the completion of the initial fixed period, the customer may elect the month-to-month option for that service configuration, or may elect any of the fixed service periods. (T)

8. ADVANCED COMMUNICATIONS NETWORKS

8.4 *QWEST DSL* SERVICE
8.4.2 REGULATIONS (CONT'D)

B. Obligations of the Customer

1. When a customer orders *QWEST DSL* Service, the customer must provide compatible customer premises equipment (CPE). In addition, the customer must specify the Company-provided local exchange Telecommunications Number (TN) or service address to be used. A Telecommunications Number is not (C)
required with Stand Alone *Qwest DSL*. (C)

2. When a customer orders *QWEST DSL HOST* Service, the customer must provide the necessary information (e.g., Data Link Connection Identifier(s), and/or Internet Protocol) to provision *QWEST DSL HOST* Service using Company ATM Service.

3. The customer may request a design change to the service ordered. A design change is any change which requires engineering review. Design changes do not include a change of customer premises, end user premises or *QWEST DSL HOST* Access Link speeds. Changes of this nature will require the issuance of a new order and a cancellation of the original order. Cancellation charges are set forth in 5.2.3, preceding. Changes in *QWEST DSL* Service and *QWEST IDSL* which result in the service(s) pointing to a different *QWEST DSL HOST* Access Link are design changes and subject to the Design Change charge as set forth in 5.2.2, preceding. Changes requested on the Plant Test Date (PTD) or later will require the issuance of a new order.

4. Changes in *QWEST DSL* Service and *QWEST IDSL* Service speeds will result in a Speed Change Charge as set forth in 8.4.5.A., following.

8. ADVANCED COMMUNICATIONS NETWORKS

8.4 *QWEST DSL* SERVICE (T)
8.4.2 REGULATIONS (Cont'd)

C. Installation Guarantee *QWEST DSL PRO* (T)

In the event network difficulties develop during the installation of *QWEST DSL PRO* offerings, the Company guarantees resolution within five business days. Inability to resolve the problem within five business days will afford the customer a credit for one month of recurring charges. The credit will appear on the customer's next month's bill. (T)

D. Service Guarantee *QWEST DSL PRO* (T)

1. Satisfaction Assurance

The Company is committed to providing the customer with a satisfactory experience when subscribing to the *QWEST DSL PRO* offerings. If the customer cancels service within 30 days after installation due to dissatisfaction, the Company will refund any recurring and nonrecurring charges accrued and waive Termination Liability. (T)

2. Service Assurance

In the event the *QWEST DSL PRO* offerings are out of service 3 times in a 30 day period and the trouble is found to be in the customer's line, the customer may request to cancel service without having to pay any Termination Liability. This Service Assurance is not inclusive of service issues associated with the customer's modem or Internet Service Provider. (T)

3. Line Connect Speed Assurance

QWEST DSL PRO offerings are designed to deliver the line speed ordered by the subscriber. However, if the *QWEST DSL PRO* line connection speed cannot be maintained to the customer's satisfaction, the Company will at the customer's request, change the customer's speed to a lower speed without assessing the Speed/Destination Channel Change Charge. (T) (T)

8. ADVANCED COMMUNICATIONS NETWORKS

8.4 *QWEST DSL* SERVICE (Cont'd) (T)

8.4.3 RATE ELEMENTS

A. *QWEST DSL* Service Charge (T)

A nonrecurring charge and a monthly rate apply per termination. If a customer requests a different ADSL speed and/or a change in their designated *QWEST DSL* (T)
HOST location, a change charge for Speed/Destination Channel Change applies (T)
per order. If a customer changes from a dedicated connection to a per session connection or vice versa, a change charge for Change from Dedicated to Per Session Connection applies.

When a change in speed or destination channel is requested at the same time as a change from a dedicated to a shared connection, or vice versa, only the higher of the *QWEST DSL* Change Charges applies. (T)

8. ADVANCED COMMUNICATIONS NETWORKS

8.4 *QWEST DSL* SERVICE
8.4.3 RATE ELEMENTS SERVICE (Cont'd)

B. *QWEST DSL HOST* Service

1. Port (BSE)

   A nonrecurring charge and monthly rate apply for each 1.5 Mbps *QWEST DSL HOST* Port. For a 44.736 Mbps *QWEST DSL HOST* Port, a nonrecurring charge and monthly rate apply for the initial Port and an additional recurring rate applies for each bandwidth increment of 3 Mbps.

2. Access Link

   The rates and charges for other Company-provided services used as access links for *QWEST DSL HOST* Service are in addition to the rates and charges for the *QWEST DSL HOST* Port. A DS1 Service and/or DS3 Service channel termination may be purchased by the customer, as set forth in Private Line Transport Services Section 7 and/or 17. ATM Optical Access Links may be purchased by the customer at either 44.736 Mbps or 155 Mbps with up to 4 Host names associated with a single link, as set forth in 8.5.1.

3. Port Change Charge

   A nonrecurring charge applies each time a customer changes bandwidth on a *QWEST DSL HOST* or ATM Port, subsequent to the initial installation, e.g., for a change from 3 Mbps to 9 Mbps, one change charge applies. A nonrecurring charge also applies when adding or changing QWEST DSL HOST bandwidth increments to an existing 44.736 Mbps or 155.52 Mbps ATM Port.

   An upgrade of port speeds 1.544 Mbps, IMA port speeds, 44.736 Mbps, or 155.52 Mbps requires a change of Access Link as well and will be considered a discontinuance of one service and establishment of new service. (C)

   Downgrades in port speeds 1.544 Mbps, IMA port speeds, 44.736 Mbps, or 155.52 Mbps requires a change of Access Link as well and will be considered a discontinuance of one service and establishment of new service. In addition Termination Liability and Waiver Policy will be applicable for downgrades. (C)

8. ADVANCED COMMUNICATIONS NETWORKS

8.4 *QWEST DSL* SERVICE
8.4.3 RATE ELEMENTS SERVICE

B. *QWEST DSL HOST* Service (Cont'd)

4. Central Office Connecting Channel (COCC)

   One Central Office Connecting Channel nonrecurring charge and monthly rate applies per connection. The rates and charges for a DS1 Service and DS3 Service (C)
   COCC are set forth in Section 7 and/or 17. (C)

5. Bandwidth

   A monthly rate applies for each 3 Mbps increment of Bandwidth, up through 45 Mbps. A minimum of one 3 Mbps increment of Bandwidth applies for each 45 Mbps *QWEST DSL HOST* Port.

8. ADVANCED COMMUNICATIONS NETWORKS

8.4 *QWEST DSL* SERVICE (Cont'd)

8.4.4 PRICING PLANS

A. Pricing Plan Terms and Conditions

1. *QWEST DSL* Service may be ordered on a month-to-month or on a Fixed Period Service Rate Plan for 12, 36 or 60 months at the rates set forth in 8.4.5, following. Exception: as of August 7, 2001, *Qwest DSL 640k* will no longer offer Fixed Period Service Rate Plans for 12, 36, or 60 months to new customers or for renewal once existing plans reach termination.

2. *QWEST DSL* Volume Plan provides discounted monthly rates for selected *QWEST DSL* speeds as set forth in 8.4.5.A and 8.4.5.B, following, if they agree to the conditions of the Starter Option, the Basic Discount Option or one of the Volume Commitment Options. (C) (C)

   - The Starter Option is for the customer who commits to having a minimum of 2,500 active and billable *QWEST DSL* lines by the end of their initial 12 month period. The initial 12 month period will start on the date the customer has the first *QWEST DSL* line installed. (N) (N)

   - The Basic Discount Option is for the customer who commits to having a minimum of 15,000 active and billable *QWEST DSL* lines by the end of their initial 12 month period. The initial 12 month period will start on the date the customer has the first *QWEST DSL* line installed. (T)

     The nonrecurring charge associated with all Basic Discount Option *QWEST DSL* lines will be waived when the service is connected. However, for each *QWEST DSL* line that disconnects without being in service for at least 12 months, a nonrecurring charge will be assessed as set forth in 8.4.5.A, following.

   - The Volume Commitment Option I plan allows the customer to choose the number of *QWEST DSL* lines they will acquire over the 36 month Fixed Period Service Rate Plan with a subscription range of 60,001 lines to 400,000 lines.

8. ADVANCED COMMUNICATIONS NETWORKS

8.4 *QWEST DSL* SERVICE
8.4.4 PRICING PLANS

A.2. (Cont'd)

- The Volume Commitment Option II plan allows the customer to choose a 5-year Fixed Period Service Rate Plan with a minimum commitment of 150,000 subscription lines by the end of the first year and a minimum 200,001 subscription lines as of the end of the third, fourth and fifth year periods. If the Company has billed the customer for 4 million months of service by the end of the third year, the customer will be considered to have met all commitment levels. The months of service are calculated as follows:

  - Number of DSL lines times the number of months the services are active and billing, equals months of service.

  - Example: 25,000 DSL lines per month times 12 months equals 300,000 months of service during a year.

- The Volume Commitment Option III plan allows the customer to choose the number of *QWEST DSL* lines they will acquire over the 60-month Fixed Period Service Rate Plan with a subscription range of 120,000 lines to 500,000 lines.

(M) Certain material previously found on this page can now be found on Page 8-304.2.

8. ADVANCED COMMUNICATIONS NETWORKS

8.4 *QWEST DSL* SERVICE
8.4.4 PRICING PLANS

A.2. (Cont'd)

- Volume Commitment Option IV provides existing *QWEST DSL* Volume Plan customer(s) or former *QWEST DSL* Volume Plan customer(s) with a minimum of 5,000 DSL subscribers discounted rates and a maximum period of time to terminate *QWEST DSL* Service. Customers who choose Option IV prior to the expiration of their existing Volume Commitment Fixed Period Service Rate Plan will be subject to TLA and/or shortfall charges, as set forth in 8.1.5, preceding, which must be paid prior to activation of Option IV. (N)

  Customers who choose Option IV will receive the applicable discount on the DSL monthly rates, as set forth in 8.4.5.A & B, following, during their participation in Option IV. The discount percentage shall be based on the number of active DSL ports in service when Option IV goes into effect, as set forth in 8.4.5.C, following. The customer's participation in Option IV will terminate when the earlier of the following occurs:

  - The date that the customer disconnects the last DSL line that existed or was purchased under this option.

  - The expiration of 24 months following the customer's written election to participate in Option IV. At the conclusion of Option IV, the customer's remaining active DSL lines will be billed the monthly rates, as set forth in 8.4.5.A & B, following. (N)

Section 8.1.5, preceding, provides other specific terms and conditions for the *QWEST DSL* Volume Plans. (C)(M) (C)(M)

(M) Certain material on this page formerly appeared on Page 8-304.1.

(M) Certain material previously found on this page can now be found on Page 8-304.3.

8. ADVANCED COMMUNICATIONS NETWORKS

8.4 *QWEST DSL* SERVICE
8.4.4 PRICING PLANS

A.2. (Cont'd)

Volume discounts for the Starter Option, the Basic Discount Option and Volume Commitment Options I, II, III and IV are applicable to monthly rates only. The discounts are applied to the monthly rates for selected *QWEST DSL* speeds as set forth in 8.4.5.A and 8.4.5.B, following. Nonrecurring charges will not be discounted for Volume Commitment Option I and nonrecurring charges for Volume Commitment Option II will not apply. The Starter Option, Basic Discount Option and Volume Commitment Option I are available on a 36 month Fixed Period Rate Plan, Volume Commitment Options II and III are available on a 60 month Fixed Period Service Rate and Volume Commitment Option IV is available for 24 months or less, as set forth above. (C) (C) (C) (C)

- Obligations of customers who subscribe to *QWEST DSL* Volume Plans:
  - Must establish *QWEST DSL HOST* Service in all LATAs where the customer subscribes to *QWEST DSL* Service. This may be satisfied by purchasing *QWEST DSL HOST* Service or by utilizing *QWEST DSL HOST* Service purchased by another customer.
  - Must submit orders to the Company electronically in a format and manner designated by the Company
  - Must provide customer premises equipment to its end users
  - Must deal directly with its end users and be solely liable with respect to all matters relating to the service, including marketing, ordering, technical support, billing and collections
  - Must direct end users not to contact the Company regarding any aspect of the service
  - Must communicate an end user's request to disconnect *QWEST DSL* Service to the Company within two business days of end user's notification to the customer purchasing under any *QWEST DSL* Volume Plan

- The telecommunications services offered under the *QWEST DSL* Volume Plan are provided at wholesale to carriers and non-carriers. The telecommunications services offered under the *QWEST DSL* Volume Plan are not services that the Company provides at retail, and, accordingly, are not subject to the rate provisions of Sections 251 (c) (4) and 252 (d) (3) of the Communications Act, 47 U.S.C.§§ 251 (c) (4), 252 (d) (3).

8. ADVANCED COMMUNICATIONS NETWORKS

8.4 *QWEST DSL* SERVICE
8.4.4 PRICING PLANS

A. Pricing Plan Terms and Conditions (Cont'd)

3. *QWEST DSL HOST* Service and *QWEST IDSL* must be initially ordered under a Fixed Period Service Rate Plan. At the end of the initial service period, the service may be obtained on a month-to-month basis or any of the specified fixed period service rate periods. The customer may order a Fixed Period Service Rate Plan for 12, 36 or 60 months at the rates set forth in 8.4.5, following.

4. Monthly rates for the entire fixed period will be stabilized from Company-initiated increases, at the rates in effect for the fixed period on the service date. The customer must specify the length of the fixed period at the time the service is ordered. The minimum service period for a *QWEST DSL*, *QWEST IDSL* or *QWEST DSL HOST* fixed period service rate plan is 12 months.

5. *QWEST DSL HOST* Service rate elements may be ordered under any optional rate plan. For example, the customer may order the Access Link under the 36-month fixed period service rate plan and the *QWEST DSL HOST* Port under the 60-month fixed period service rate plan.

6. When a customer with ISDN or *QWEST IDSL* Service migrates to a *QWEST DSL* Service at the same address of record a nonrecurring charge will not apply. In addition, TLA will be waived if a *QWEST IDSL* customer migrates to *QWEST DSL* at the same address of record.

7. Fixed Period Rate Plans established on or before August 31, 1998, will automatically receive a rate decrease if the Company decreases rates during the term of the plan. Effective September 1, 1998, customers establishing a Fixed Period Rate Plan, will not receive a rate decrease if the Company decreases rates during the term of the plan.

Certain material previously found on this page can now be found on Page 305.1.

8. ADVANCED COMMUNICATIONS NETWORKS

8.4 *QWEST DSL* SERVICE
8.4.4 PRICING PLANS

A. Pricing Plan Terms and Conditions (Cont'd)

8. For Volume Commitment Option I at the end of the fixed period, the customer may select a new fixed period, convert to monthly rates (month-to-month) or terminate the service. The rates will be those in effect at the time the new fixed period begins. Should the customer not make a choice by the end of a fixed period, the service will automatically revert to the effective monthly (month-to-month) rates. If service is continued, nonrecurring charges will not apply. (M) (M)

9. For Volume Commitment Option II upon mutual agreement at least 6 months prior to the expiration of the Initial Term, the plan may be renewed for one additional 12-month term with the same terms and conditions. (N)

10. For Volume Commitment Option III at least 30 days notice prior to the expiration of the Initial Term, the plan may be renewed for three additional 12-month terms with the same terms and conditions. (N)

Certain material on this page formerly appeared on Page 305.

8. ADVANCED COMMUNICATIONS NETWORKS

8.4 *QWEST DSL* SERVICE
8.4.4 PRICING PLANS

B. Changes to Rate Plans

Services rated under the month-to-month plan or an existing fixed period service rate plan may be upgraded to a fixed period service rate plan at any time the customer chooses without incurring nonrecurring charges or Termination Liability. This upgrade will be allowed provided the channel interface and the customer-designated premises remain the same. Additionally, the new fixed period service rate plan must meet or exceed the fixed period service rate plan being upgraded.

The monthly rates will be those in effect at the time the new fixed period begins. New minimum service periods apply to upgrades in rate plans.

If a customer chooses to change an existing service provided under a fixed period service rate plan to month-to-month billing, the change will be treated as a discontinuance of the existing service and an establishment of new service. Termination Liability, as set forth in 8.1.5, and a new minimum period will apply in addition to the new monthly rates for the service.

C. Termination Liability and Waiver Policy (T)

If the customer chooses to discontinue all or a portion of the service prior to the expiration of the fixed period service, Termination Liability and Waiver Policy, as (T)
set forth in 8.1.5, will apply.

8. ADVANCED COMMUNICATIONS NETWORKS

8.4 *QWEST DSL* SERVICE (Cont'd)

8.4.5 RATES AND CHARGES

A. *QWEST DSL* Service

Fixed Period Service Rate Plans for 12, 36, and 60 months are grandfathered as set forth in 8.4.4, preceding, for *Qwest Choice DSL Deluxe.*

1. DMT *QWEST DSL* Service Charge, per termination

	USOC	NONRECURRING CHARGE	MONTHLY RATE	
a. DMT *Qwest Choice DSL*,				
• Dedicated connection				
- Monthly	GRLSM	$99.00	$15.00	
b. DMT *Qwest DSL 640k*,				(T)
• Dedicated connection				
- Monthly	GRLAM	99.00	28.00	
- 12 Months	GRLA1	99.00	28.00	
- 36 Months	GRLA3	99.00	29.95	
- 60 Months	GRLA5	99.00	29.95	

8. ADVANCED COMMUNICATIONS NETWORKS

8.4 *QWEST DSL* SERVICE
8.4.5 RATES AND CHARGES

A. *QWEST DSL* Service

1. DMT *QWEST DSL* Service Charge, (Cont'd)
   per termination

	USOC	NONRECURRING CHARGE	MONTHLY RATE	
c. DMT *Qwest Choice DSL Deluxe*,				(N)
• Dedicated connection				
- Monthly	GRLZM	$99.00	$28.00	(N)
d. DMT *QWEST DSL PRO DELUXE*,				(T)
• Dedicated connection				
- Monthly	GRLGM	99.00	55.00	
- 12 Months	GRLG1	99.00	55.00	
- 36 Months	GRLG3	99.00	55.00	
- 60 Months	GRLG5	99.00	55.00	

8. ADVANCED COMMUNICATIONS NETWORKS

8.4 *QWEST DSL* SERVICE
8.4.5 RATES AND CHARGES

A.1. (Cont'd)

	USOC	NONRECURRING CHARGE	MONTHLY RATE	
e. DMT *QWEST DSL PRO 640 KBPS*				(T)
• Dedicated connection				
- Monthly	GRLBM	$99.00	$66.00	
- 12 Months	GRLB1	99.00	64.00	
- 36 Months	GRLB3	99.00	62.00	
- 60 Months	GRLB5	99.00	60.00	
f. DMT *QWEST DSL PRO 1 MBPS*				(T)
• Dedicated connection				
- Monthly	GRLDM	99.00	88.00	
- 12 Months	GRLD1	99.00	84.00	
- 36 Months	GRLD3	99.00	80.00	
- 60 Months	GRLD5	99.00	76.00	

8. ADVANCED COMMUNICATIONS NETWORKS

8.4 *QWEST DSL* SERVICE
8.4.5 RATES AND CHARGES

A.1. (Cont'd)

	USOC	NONRECURRING CHARGE	MONTHLY RATE	
g. DMT *QWEST DSL PRO 4 MBPS*				(T)
• Dedicated connection				
- Monthly	GRLEM	$99.00	$165.00	
- 12 Months	GRLE1	99.00	160.00	
- 36 Months	GRLE3	99.00	155.00	
- 60 Months	GRLE5	99.00	150.00	
h. DMT *QWEST DSL PRO 7 MBPS*				(T)
• Dedicated connection				
- Monthly	GRLFM	99.00	275.00	
- 12 Months	GRLF1	99.00	269.00	
- 36 Months	GRLF3	99.00	263.00	
- 60 Months	GRLF5	99.00	257.00	

8. ADVANCED COMMUNICATIONS NETWORKS

8.4 *QWEST DSL* SERVICE
8.4.5 RATES AND CHARGES

A. *QWEST DSL* Service (Cont'd)

2. DMT Stand Alone *Qwest DSL* Service Charge, per termination (N)

	USOC	NONRECURRING CHARGE	MONTHLY RATE	
DMT Stand Alone *Qwest DSL*,				
• Dedicated connection				
- Monthly	GRLZS	$99.00	$33.00	(N)

8. ADVANCED COMMUNICATIONS NETWORKS

8.4 *QWEST DSL* SERVICE
8.4.5 RATES AND CHARGES

A. *QWEST DSL* Service (Cont'd) (T)

	USOC	NONRECURRING CHARGE	
3. DMT *QWEST DSL* Change Charge, per order			(T)
• Speed/Destination Channel Change[1]	REAKM	$9.99	

[1] The Speed/Destination Channel Change Charge will not apply for speed changes when upgrading speeds or changing within DMT *QWEST DSL PRO*.

8. ADVANCED COMMUNICATIONS NETWORKS

8.4 *QWEST DSL* SERVICE (Cont'd)

8.4.5 RATES AND CHARGES

B. CAP *QWEST DSL* Service[1]

1. CAP *QWEST DSL* Service Charge, per termination

	USOC	NONRECURRING CHARGE	MONTHLY RATE
a. CAP *QWEST DSL SELECT*,			
• Per session connection			
- Monthly	HRCAM	$69.00	$15.00
- 12 Months	HRCA1	69.00	15.00
- 36 Months	HRCA3	69.00	19.95
- 60 Months	HRCA5	69.00	19.95
b. CAP *Qwest DSL 640k*,			
• Dedicated connection			
- Monthly	HRLAM	69.00	28.00
- 12 Months	HRLA1	69.00	28.00
- 36 Months	HRLA3	69.00	29.95
- 60 Months	HRLA5	69.00	29.95

(T)

[1] All CAP *QWEST DSL* Services are grandfathered as of April 4, 2001, except CAP *QWEST DSL SELECT* which is grandfathered as of June 14, 2001.

8. ADVANCED COMMUNICATIONS NETWORKS

8.4 *QWEST DSL* SERVICE
8.4.5 RATES AND CHARGES

B.1. (Cont'd)

	USOC	NONRECURRING CHARGE	MONTHLY RATE
c. CAP *QWEST DSL PRO DELUXE*			
• Dedicated connection			
- Monthly	H5LGM	$69.00	$55.00 (I)
- 12 Months	H5LG1	69.00	55.00
- 36 Months	H5LG3	69.00	55.00
- 60 Months	H5LG5	69.00	55.00 (I)
d. CAP *QWEST DSL PRO 640 KBPS*			
• Dedicated connection			
- Monthly	HRLBM	69.00	66.00 (I)
- 12 Months	HRLB1	69.00	64.00
- 36 Months	HRLB3	69.00	62.00
- 60 Months	HRLB5	69.00	60.00 (I)

8. ADVANCED COMMUNICATIONS NETWORKS

8.4 *QWEST DSL* SERVICE
8.4.5 RATES AND CHARGES

B.1. (Cont'd)

	USOC	NONRECURRING CHARGE	MONTHLY RATE
e. CAP *QWEST DSL PRO 960 KBPS*			
• Dedicated connection			
- Monthly	HRLCM	$69.00	$77.00 (I)
- 12 Months	HRLC1	69.00	74.00
- 36 Months	HRLC3	69.00	71.00
- 60 Months	HRLC5	69.00	68.00 (I)
f. CAP *QWEST DSL PRO 1.2 MBPS*			
• Dedicated connection			
- Monthly	HRLDM	69.00	88.00 (I)
- 12 Months	HRLD1	69.00	84.00
- 36 Months	HRLD3	69.00	80.00
- 60 Months	HRLD5	69.00	76.00 (I)

8. ADVANCED COMMUNICATIONS NETWORKS

8.4 *QWEST DSL* SERVICE
8.4.5 RATES AND CHARGES

B.1. (Cont'd)

	USOC	NONRECURRING CHARGE	MONTHLY RATE
g. CAP *QWEST DSL PRO 4 MBPS*			
• Dedicated connection			
- Monthly	HRLEM	$69.00	$165.00 (I)
- 12 Months	HRLE1	69.00	160.00
- 36 Months	HRLE3	69.00	155.00
- 60 Months	HRLE5	69.00	150.00 (I)
h. CAP *QWEST DSL PRO 7 MBPS*			
• Dedicated connection			
- Monthly	HRLFM	69.00	275.00 (I)
- 12 Months	HRLF1	69.00	269.00
- 36 Months	HRLF3	69.00	263.00
- 60 Months	HRLF5	69.00	257.00 (I)

8. ADVANCED COMMUNICATIONS NETWORKS

8.4 *QWEST DSL* SERVICE
8.4.5 RATES AND CHARGES

B. CAP *QWEST DSL* Service (Cont'd)

	USOC	NONRECURRING CHARGE
2. CAP *QWEST DSL* Change Charge, [1] per order		
• Destination Channel Change[2]	REAKM	$9.99 (R)

[1] All CAP *QWEST DSL* Services are grandfathered as of April 4, 2001, except CAP *QWEST DSL SELECT* which is grandfathered as of June 14, 2001.

[2] TheDestination Channel Change Charge will not apply for CAP *QWEST DSL PRO*.

8. ADVANCED COMMUNICATIONS NETWORKS

8.4 *QWEST DSL* SERVICE
8.4.5 RATES AND CHARGES

C. *QWEST DSL* Volume Plan

The following discount percentages apply to the respective month-to-month recurring rate for the *QWEST DSL* service available to the option chosen by the customer as set forth in 8.4.5.A, preceding.

TOTAL DSL ACTIVE PORTS IN SERVICE	DISCOUNT % OF MONTHLY RATE	
• Starter Option[1]		(N)
- 0 to 2,499	0%	
- 2,500 to 4,999	2%	
- 5,000 to 9,999	4%	
- 10,000 to 14,999	7%	
- 15,000 to 29,999	11%	(N)
• Basic Discount Option[1]		
- Up to 15,000	11%	
- 15,001 to 30,000	12%	
- 30,001 to 60,000	13%	
- 60,001 to 120,000	14%	
- 120,001 to 200,000	15%	
- 200,001 to 400,000	17%	
• Volume Commitment Option I[2]		
- 60,001 to 120,000	14%	
- 120,001 to 200,000	15%	
- 200,001 to 400,000	17%	

[1] The nonrecurring charge associated with all Starter Option and Basic Discount Option *QWEST DSL* lines will be waived when the service is connected. However, for each *QWEST DSL* line that disconnects without being in service for at least 12 months, a nonrecurring charge will be assessed as set forth in 8.4.5.A, preceding. (C)

[2] The nonrecurring rates for *QWEST DSL* service as set forth in 8.4.5.A, preceding, will apply to this Plan, but not at a discounted rate.

8. ADVANCED COMMUNICATIONS NETWORKS

8.4 *QWEST DSL* SERVICE
8.4.5 RATES AND CHARGES

C. *QWEST DSL* Volume Plan (Cont'd)

TOTAL DSL ACTIVE PORTS IN SERVICE	DISCOUNT % OF MONTHLY RATE	
• Volume Commitment Option II[1]		
- 1 and greater:		
Qwest Choice DSL	25%	
QWEST DSL SELECT	17%	
Qwest DSL 640k	17%	(T)
- 1 and greater[2]:		
Qwest Choice DSL	32%	
QWEST DSL SELECT	25%	
Qwest DSL 640k	25%	(T)
• Volume Commitment Option III[3]		
- Up to 120,000 – 18 months	24.9%	
- Up to 260,000 – 30 months	24.9%	
- Up to 400,000 – 42 months	24.9%	
- Up to 500,000 – 54 months	24.9%	

[1] The nonrecurring rates for *QWEST DSL* service as set forth in 8.4.5.A, preceding, will not apply to this Plan.

[2] Applies only to years 4 and 5 of the Plan once the customer has paid the Company for 4 million months of service.

[3] Volume Commitment Option III has an Activation Fee of $35.00 per end user subscriber line, in lieu of the nonrecurring rates set forth in 8.4.5.A, preceding. This fee will be waived if the Company fails to activate service by Due Date.

8. ADVANCED COMMUNICATIONS NETWORKS

8.4 *QWEST DSL* SERVICE
8.4.5 RATES AND CHARGES

C. *QWEST DSL* Volume Plan (Cont'd)

TOTAL DSL ACTIVE PORTS IN SERVICE	DISCOUNT % OF MONTHLY RATE
• Volume Commitment Option IV[1]	
- 0 - 4,999	1%
- 5,000 - 9,999	2.5%
- 10,000 - 14,999	5%
- 15,000 - 24,999	10%
- 25,000 +	19.65%

(N)

[1] Customers who choose Volume Commitment Option IV and add new subscribers will be billed the Activation Fee that was associated with their original Volume Plan. (N)

8. ADVANCED COMMUNICATIONS NETWORKS

8.4 *QWEST DSL* SERVICE
8.4.5 RATES AND CHARGES (Cont'd)

D. *QWEST DSL HOST* Access Link

	USOC	NONRECURRING CHARGE	MONTHLY RATE
• 1.544 Mbps	N/A	[1]	[1]
• 44.736 Mbps	N/A	[2]	[2]
• 155.52 Mbps	N/A	[2]	[2]

E. *QWEST DSL HOST* Port (BSE)

1. 1.5 Mbps, per Port

• Monthly	HPRGM	$500.00	$910.00	(T)
• 12 Months	HPRG1	500.00	455.00	
• 36 Months	HPRG3	500.00	409.50	
• 60 Months	HPRG5	500.00	364.00	(T)

2. IMA Ports, per Port (N)

• 3 Mbps	-	[3]	[3]	
• 4.6 Mbps	-	[3]	[3]	
• 6.1 Mbps	-	[3]	[3]	
• 7.7 Mbps	-	[3]	[3]	
• 9.2 Mbps	-	[3]	[3]	
• 10.7 Mbps	-	[3]	[3]	
• 12.3 Mbps	-	[3]	[3]	(N)

[1] DS1 Service Channel Termination rates and charges are as set forth in Sections 7 and 17.

[2] ATM Optical Access Link rates and charges are as set forth in 8.5.5, following and DS3 Service Channel Termination rates and charges are as set forth in Sections 7 and 17.

[3] See ATM Service Rates and Charges, IMA Ports, per port as set forth in 8.5.5, following. (N) (N)

8. ADVANCED COMMUNICATIONS NETWORKS

8.4 *QWEST DSL* SERVICE
8.4.5 RATES AND CHARGES

E. *QWEST DSL HOST* Port (Cont'd)

3. 44.736 Mbps, per Port (T)

A minimum of one 3 Mbps Bandwidth increment applies for each 44.736 Mbps *QWEST DSL HOST* Port. The nonrecurring charge includes the installation of the Bandwidth increment(s) installed at the same time as the *QWEST DSL HOST* Port.

	USOC	NONRECURRING CHARGE	MONTHLY RATE
• Monthly	HPRKM	$200.00	$600.00
• 12 Months	HPRK1	200.00	570.00
- Vintage 9/07/99 through 1/28/02			418.00
• 36 Months	HPRK3	200.00	510.00
- Vintage[1] 9/07/99 through 1/28/02			407.00
• 60 Months	HPRK5	200.00	480.00
- Vintage 9/07/99 through 1/28/02			396.00

4. 155.52 Mbps, per Port [1] [1] (T)

[1] See ATM Service Fixed Rate, per Port, 155.52 Mbps, 8.5.5, following.

8. ADVANCED COMMUNICATIONS NETWORKS

8.4 *QWEST DSL* SERVICE
8.4.5 RATES AND CHARGES (Cont'd)

F. Bandwidth

Applicable only to the 44.736 Mbps *QWEST DSL HOST* Port or ATM Port used in lieu of a *QWEST DSL HOST* Port. A minimum of one increment applies for each 44.736 Mbps *QWEST DSL HOST* Port or ATM Port used in lieu of a *QWEST DSL HOST* Port. (T) (T)

1. Each 3 Mbps Increment, up to 44.736 Mbps, per increment

	USOC	NONRECURRING CHARGE	MONTHLY RATE
• Monthly	HB1HM	–	$478.00
• 12 Months	HB1H1	–	239.00
• 36 Months	HB1H3	–	232.00
• 60 Months	HB1H5	–	227.00

2. *QWEST DSL HOST* Port Bandwidth Change Charge

• 3 to 45 Mbps port speed bandwidth change, per speed change	REAKN	$100.00	–

8. ADVANCED COMMUNICATIONS NETWORKS

8.4 *QWEST DSL* SERVICE
8.4.5 RATES AND CHARGES (Cont'd)

	NONRECURRING CHARGE	MONTHLY RATE
G. Central Office Connecting Channel		
• Per connection	[1]	[1]

[1] COCC rates and charges are as set forth in Sections 7 and 17. (C)

8. ADVANCED COMMUNICATIONS NETWORKS

8.4 *QWEST DSL* SERVICE
8.4.5 RATES AND CHARGES (Cont'd)

H. *QWEST IDSL* Service (T)

1. Channel Termination, per termination

	USOC	MONTHLY RATE	NONRECURRING CHARGE
• Monthly	T8XYX	$69.95	$250.00
• 12 Months	T8XY1	69.95	250.00
• 36 Months	T8XY3	65.95	250.00
• 60 Months	T8XY5	59.95	250.00
2. Speed Change Charge, per order	REALY	–	30.00

8. ADVANCED COMMUNICATIONS NETWORKS

8.5 ATM SERVICE (T)

8.5.1 GENERAL

A. Description

ATM Service is a connection-oriented communications service that uses Asynchronous Transfer Mode (ATM) technology. The service provides customers with high-speed, low-delay information transfer capacity, which supports applications that require near-real-time mixed media (data, video, image, voice) communications among multiple locations. ATM Service supports transmission speeds of 1.544 Mbps, 45 Mbps, 155 Mbps and 622 Mbps. (T) (T) (C)

ATM Service offers Inverse Multiplexing over ATM (IMA). This allows a bandwidth option between DS1 (1.544 Mbps) and DS3 (45 Mbps) levels. IMA utilizes 2 to 8 DS1s and bundles them together to create a solid bandwidth increment of 3 Mbps, 4.6 Mbps, 6.1 Mbps, 7.7 Mbps, 9.2 Mbps, 10.7 Mbps or 12.3 Mbps. IMA is available over the following Service Classes Constant Bit Rate (CBR), Variable Bit Rate – non-real time (VBR-nrt) and Unspecified Bit Rate (UBR) as set forth in B.10, following. (N) (N)

ATM Service requires the use of customer terminal equipment that functions as a multiplexer/router/hub or ATM switch. This terminal equipment must be purchased separately from the ATM Service and must conform to industry standards. The terminal equipment accumulates customer traffic and puts it into a an ATM format suitable for transmission over the ATM Service Network. (T) (T) (T)

Interworking PVC (IPVC) is an available option that creates a connection between the ATM and Frame Relay Networks. Frame Relay to ATM interworking allows customers to complement the high-bandwidth transport capabilities of ATM with Frame Relay in order to provide a seamless transition to a single or multi-service network. (N) (N)

8. ADVANCED COMMUNICATIONS NETWORKS

8.5 ATM SERVICE (T)

8.5.1 GENERAL

A. Description (Cont'd)

ATM Service conforms to industry standards and is only provided over fiber optic facilities or other compatible private line facilities, such as Synchronous Service Transport (SST), DS3 Service or DS1 Service. Technical Specifications for ATM Service are delineated in Qwest Corporation Technical Publication PUB 77378. (T) (T)

A customer may request that the facilities used to provide ATM Service be specially routed. The regulations, rates and charges for Special Facilities Routing (i.e., Diversity) are as set forth in Section 11, following. (T)

ATM connectivity between two separate LSS networks and/or between LSS and ATM Service locations can be used for LSS provisioning. The connection between the LSS/LSS or LSS/ATM Service locations can be an ATM Service virtual channel connection (VCC). VCCs for the LSS/LSS or LSS to ATM Service option are only available as Unspecified Bit Rate (UBR) for monthly or fixed period service rate plans of 12, 36 and 60 months. The VCC and UBR rate regulations and rates are as set forth in 8.5.3 and 8.5.5., following. (T) (T) (T)

8. ADVANCED COMMUNICATIONS NETWORKS

8.5 ATM SERVICE (T)
8.5.1 GENERAL (Cont'd)

B. Service Elements

1. Network Interface

The network interface is the point at which a customer's data transmissions first enters the network supporting ATM Service. It is the point of interconnection between Company communication facilities and customer terminal equipment. (T)

2. ATM Access Links (C)

a. DS1 Access Link

An ATM DS1 Access Link provides DS1 physical access to the ATM Service Network, connecting customer facilities at the User-Network Interface (UNI) over DS1 Private Line Transport facilities. The transport facilities transfer information through the network over logical connections at speeds selected by the customer. (N)

b. IMA Access Link

An IMA Access Link utilizes 2 to 8 DS1s bundled for physical access to the ATM Service Network, connecting customer facilities at the User-Network Interface (UNI) over DS1 Private Line Transport facilities. The transport facilities transfer information through the network over logical connections at speeds selected by the customer. (N)

c. Optical Access Link (OAL) (T)

An ATM Service Optical Access Link provides access to the ATM Service Network, connecting customer facilities at the network interface with a corresponding ATM Service Cell Transfer element. An ATM Service Optical Access Link is only available at ATM Service Points. An ATM Service Optical Access Link may be optioned with 45 or 155 Mbps OAL Protection as set forth in 9., following. (T) (T) (T) (T)

Certain material previously found on this page can now be found on Page 8-319.

8. ADVANCED COMMUNICATIONS NETWORKS

8.5 ATM SERVICE (T)

8.5.1 GENERAL

B. 2. ATM Access Links (Cont'd)

d. Stand-Alone Optical Access Link (SAOAL) (T)(M)

An ATM Service Stand-Alone Optical Access Link connects customer facilities (T) to ATM networks provided by service providers other than the Company. (T) Private line transport mileage and/or a Central Office Connecting Channel (COCC) may be required in conjunction with a SAOAL in order to connect the customer's serving wire center, or node, with the serving wire center, or node of (T) another ATM Service provider. A SAOAL may be optioned with 45 or 155 Mbps OAL Protection as set forth in 10., following. (M)

3. ATM and IMA Ports (C)

ATM and IMA ports are the physical entry points into the ATM Service Network (C) for Optical Access Links or other compatible private line facilities, such as Synchronous Service Transport (SST), DS3 Service or DS1 Service. They are the originating and terminating points for Virtual Path Connections and Virtual Channel Connections. Ports include the electronic equipment used in connecting these service elements to the ATM Service Network. They enable customers to allocate bandwidth to applications at customer-designated transmission speeds of up to 1.544 Mbps, 3 Mbps, 4.6 Mbps, 6.1 Mbps, 7.7 Mbps, 9.2 Mbps, 10.7 Mbps, (C) 12.3 Mbps, 45 Mbps, 155 Mbps or 622 Mbps. (C)

The customer may also utilize a 44.736 Mbps *QWEST DSL HOST* Port in lieu of a 44.736 Mbps ATM Service Port, as set forth in 8.4.5. Customers will be able to allocate ATM bandwidth to applications at customer-designated transmission speed of 44.736 Mbps for their *QWEST DSL HOST* Port.

4. Service Points (T)

Service Points are geographic locations designated by the Company where the ATM Service Network can be accessed. The ATM Service Points are listed in the National Exchange Carrier Association Tariff FCC No. 4.

Certain material on this page formerly appeared on Page 8-318.

8. ADVANCED COMMUNICATIONS NETWORKS

8.5 ATM SERVICE
8.5.1 GENERAL

B. Service Elements (Cont'd)

5. Logical Connections

ATM Service logical connections function as bidirectional Permanent Virtual Connections (PVCs). ATM Service supports a point-to-point logical connection configuration between two ports. Logical Connections (PVCs) may be any of five Service Classes: Constant Bit Rate (CBR), Variable Bit Rate – real time (VBR-rt) and Variable Bit Rate – non-real time (VBR-nrt), Available Bit Rate (ABR) or Unspecified Bit Rate (UBR).

a. Virtual Channel Connections (VCC)

A VCC is a logical connection from one ATM Service Port to another ATM Service Port within the ATM Network.

VCCs are available with all Service Classes at selected Cell Transfer speed(s) depending on the customer's networking requirements which include appropriate overheads.

b. Virtual Path Connections (VPC)

A VPC is a collection of VCCs routed together as one unit, for which the customer has the ability to manage the speeds of the individual VCCs within the customer-designated Cell Transfer element.

VPCs are available as Constant Bit Rate (CBR), Variable Bit Rate – real time (C)
(VBR-rt) and Variable Bit Rate – non-real time (VBR-nrt) at customer-selected (C)
Cell Transfer speed(s), depending on the customer's networking requirements, which include appropriate overheads.

8. ADVANCED COMMUNICATIONS NETWORKS

8.5 ATM SERVICE (T)

8.5.1 GENERAL

B.5. (Cont'd) (T)

c. Logical connections are available at base speeds (64 kbps, 75 kbps, 1 Mbps or 1.787 Mbps) determined by the speed of the ATM and IMA Ports and the Service Classes selected (1.544 Mbps, 3 Mbps, 4.6 Mbps, 6.1 Mbps, 7.7 Mbps, 9.2 Mbps, 10.7 Mbps, 12.3 Mbps, 45 Mbps, 155 Mbps or 622 Mbps). The customer selects a base speed for each VCC or VPC they purchase which includes appropriate overheads. The bandwidth for each VCC or VPC is determined by multiplying the base speed by the number of increments of the base speed selected by the customer, 64 kbps is available up to 1.544 Mbps only. Technical Specifications for ATM Service are delineated in Qwest Corporation Technical Publication PUB 77378. (C) (C) (C) (T)

Logical connections are available at the following incremental base speeds:

CELL TRANSFER RATES OF SPEED: (C)

- Constant Bit Rate (CBR)

  - 64 kbps
  - 75 kbps
  - 1 Mbps
  - 1.787 Mbps

- Variable Bit Rate – real time (VBR-rt), Variable Bit Rate – non-real time (VBR-nrt), and Available Bit Rate (ABR) and Unspecified Bit Rate (UBR)

  - 64 kbps
  - 1 Mbps (C)

8. ADVANCED COMMUNICATIONS NETWORKS

8.5 ATM SERVICE
8.5.1 GENERAL

B.5.c. (Cont'd)

(C)(M)

GRANDFATHERED AVAILABLE BASE SPEEDS AS OF NOVEMBER 16, 2001:

On a 1.544 Mbps Port:
Increments of 64 kbps
Increments of 75 kbps
Increments of 1 Mbps

On a 45 Mbps Port:
Increments of 64 kbps
Increments of 75 kbps
Increments of 1 Mbps
Increments of 1.544 Mbps
Increments of 1.787 Mbps
Increments of 40.7 Mbps (M)

On a 155 Mbps Port:
Increments of 64 kbps
Increments of 75 kbps
Increments of 1 Mbps
Increments of 1.544 Mbps
Increments of 1.787 Mbps
Increments of 40.7 Mbps
Increments of 149 Mbps

Unspecified Bit Rate Service offers bandwidth increments of 64 kbps and 1 Mbps.

Certain material on this page formerly appeared on Page 8-321.

8. ADVANCED COMMUNICATIONS NETWORKS

8.5 ATM SERVICE (T)

8.5.1 GENERAL

B.5.c. (Cont'd) (T)

A customer may select multiple logical connections of different service classes on an ATM Service Port. The maximum speed of a single logical connection may not exceed 40.7 Mbps on a 45 Mbps port, 149 Mbps on a 155 Mbps port, or 149 Mbps on a 622 Mbps port. (M) (C) (C)(M)

8. ADVANCED COMMUNICATIONS NETWORKS

8.5 ATM SERVICE
8.5.1 GENERAL

B. Service Elements (Cont'd)

6. Service Classes

ATM Service logical connections are provided as Constant Bit Rate (CBR), Variable Bit Rate – real time (VBR-rt), Variable Bit Rate – non-real time (VBR-nrt), Available Bit Rate (ABR) or Unspecified Bit Rate (UBR).

- Available Service Classes as of November 16, 2001

  - Constant Bit Rate (CBR)

    CBR supports a constant flow of information (Constant Bit Rate traffic). The Peak Cell Rate is the customer-selected upper limit for cell traffic on a logical connection, which includes appropriate overheads. When cells exceed the Peak Cell Rate for CBR logical connections, the cells are discarded upon entry into the ATM Service Network. The Peak Cell Rate of a CBR logical connection must be less than the speed of the associated port. (C)

  - Variable Bit Rate – real time (VBR-rt)

    Supports bursty data traffic, with average and peak traffic parameters (e.g. voice and video applications). The VBR-rt is described by values representing a Sustained Cell Rate (SCR) and Peak Cell Rate (PCR). The SCR is the maximum average cell transmission rate on a given VCC. It allows the network to allocate sufficient network resources to guarantee network performance objectives. The SCR applies only to VBR traffic. The PCR is the maximum cell transmission rate (cells per second) per VCC. Maximum Burst Size (MBS) is used to define the maximum number of cells that can be sent at the PCR on an SCR connection at one time.

8. ADVANCED COMMUNICATIONS NETWORKS

8.5 ATM SERVICE (T)

8.5.1 GENERAL

B. Service Elements (T)

6. Service Classes (Cont'd)

- Variable Bit Rate – non real time (VBR-nrt) (N)

Supports bursty data traffic, with average and peak traffic parameters, which is transported immediately (e.g. LAN and video applications). The VBR-rt is described by values representing a Sustained Cell Rate (SCR) and Peak Cell Rate (PCR). The SCR is the maximum average cell transmission rate on a given VCC. It allows the network to allocate sufficient network resources to guarantee network performance objectives. The SCR applies only to VBR traffic. The PCR is the maximum cell transmission rate (cells per second) per VCC. Maximum Burst Size (MBS) is used to define the maximum number of cells that can be sent at the PCR on an SCR connection at one time.

The Maximum Burst Size (MBS) is the maximum number of cells that can be sent at the peak cell rate on a Variable Bit Rate – real time (VBR-rt) or Variable Bit Rate – non real time (VBR-nrt) connection at one time. Sending a burst at MBS will require the connection to reduce its data rate below the sustained cell rate for a fixed period of time before the next burst can be sent. The maximum burst size levels available are:

- 100 Cells
- 200 Cells

The 100 cell burst size will be assigned unless the customer requests 200 cell burst. (N)

Certain material previously found on this page can now be found on Page 8-327.

8. ADVANCED COMMUNICATIONS NETWORKS

8.5 ATM SERVICE (T)

8.5.1 GENERAL

B. Service Elements

6. Service Classes (Cont'd) (T)

- Available Bit Rate (ABR) (N)

  ATM layer transfer characteristics provided by the network may change subsequent to connection establishment, suitable for bursty data applications. A Minimum Cell Rate (MCR) and PCR will be applied to facilitate the bandwidth management based on a feedback mechanism. (N)

- Unspecified Bit Rate (UBR) (T)(M)

  UBR is a best-effort service designed to support a connection carrying (T) information at variable rates, over VCCs. The UBR Service does not (T) provide traffic related service guarantees, specifically, per-connection bandwidth, cell loss, cell transfer delay and cell delay variation. The peak (T) cell rate, which includes appropriate overheads, is the customer-selected, upper limit of cell traffic on a logical connection. The peak cell rate (T) specifies the highest cell rate that will be allowed on a connection, but not guaranteed. When cells exceed the peak cell rate for UBR logical (T) connections, the cells are discarded upon entry into the ATM Network. The peak cell rate of a UBR logical connection may equal, but not exceed, the (T) speed of the associated port. (M)

Certain material on this page formerly appeared on Page 8-328.
Certain material previously found on this page can now be found on Page 8-328.

8. ADVANCED COMMUNICATIONS NETWORKS

8.5 ATM SERVICE (T)

8.5.1 GENERAL

B. Service Elements

6. Service Classes (Cont'd) (T)

- Grandfathered Service Classes as of November 16, 2001 (N)

  - Peak Cell Rate Service (PCRS) (M)

    PCRS supports VCCs and VPCs carrying a constant flow of information (Constant Bit Rate traffic). The Peak Cell Rate is the customer-selected upper limit for cell traffic on a logical connection, which includes appropriate overheads. When cells exceed the Peak Cell Rate for PCRS logical connections, the cells are discarded upon entry into the ATM Service Network. The Peak Cell Rate of a PCRS logical connection must be less than the speed of the associated port. (M)

Certain material on this page formerly appeared on Pages 8-325.
Certain material previously found on this page can now be found on Page 8-329.

8. ADVANCED COMMUNICATIONS NETWORKS

8.5 ATM SERVICE (T)

8.5.1 GENERAL

B. Service Elements

6. Service Classes (Cont'd) (T)

- Grandfathered Service Classes as of November 16, 2001 (Cont'd)

  - Sustained Cell Rate Service (SCRS) (M)

    SCRS supports VCCs carrying information at variable rates (Variable Bit Rate traffic). The Sustained Cell Rate is the average cell rate, including bursts above the average, that can be sustained over an SCRS logical connection. The customer selects the bandwidth characteristics of an SCRS logical connection by choosing the appropriate Sustained Cell Rate, which includes appropriate overheads. A customer may also select maximum burst size levels of 32 cells, 100 cells or 200 cells over a SCRS logical connection at a rate equal to a Peak Cell Rate chosen by the customer, or the port speed when no Peak Cell Rate is chosen. However, the average cell rate transmitted for that logical connection must equal the chosen Sustained Cell Rate. The Peak Cell Rate of an SCRS logical connection may equal, but not exceed, the speed of the associated port. (M)

Certain material on this page formerly appeared on Page 8-326.
Certain material previously found on this page can now be found on Page 8-326.

8. ADVANCED COMMUNICATIONS NETWORKS

8.5 ATM SERVICE (T)

8.5.1 GENERAL

B. Service Elements

6. Service Classes (Cont'd) (T)

- Grandfathered Service Classes as of November 16, 2001 (Cont'd)

  - Maximum Burst Size (M)

    The Maximum Burst Size (MBS) is the maximum number of cells that can be sent at the Peak Cell Rate on a SCRS connection at one time. Sending a burst at MBS will require the connection to reduce its data rate below the SCR for a fixed period of time before the next burst can be sent. The maximum burst size levels available are:

    - 32 Cells - accommodating one Ethernet Frame
    - 100 Cells - accommodating one Token Ring Frame
    - 200 Cells - accommodating one FDDI Frame

    The 32 cell burst size will be assigned unless the customer requests a different level. The MBS of 200 Cells will require the customer to purchase a minimum of 4 Mbps of SCRS service for each VCC. (M)

Certain material on this page formerly appeared on Pages 8-327.
Certain material previously found on this page can now be found on Page 8-330.

8. ADVANCED COMMUNICATIONS NETWORKS

8.5 ATM SERVICE (T)

8.5.1 GENERAL

B. Service Elements (Cont'd)

7. Cell Transfer (T)(M)

The Cell Transfer service element transfers information between Network Interfaces connected to the ATM Service network at speed(s) selected by the customer for VCCs or VPCs. The customer must designate whether the Cell Transfer for each logical connection is CBR, VBR-rt, VBR-nrt, ABR or UBR. (C)

The total speed of Cell Transfer elements on a customer's ATM Service configuration may not exceed the associated Cell Transfer port speed (1.544 Mbps, 45 Mbps, 155 Mbps or 622 Mbps). (C)

8. Central Office Connecting Channel (COCC) (T)

A COCC provides the ongoing interconnection from the multiplexer or other Company facility port to an ATM Service port when a customer accesses ATM Service via a *QWEST DSL HOST* Port or a private line transport facility which requires multiplexing to be compatible with ATM Service transmission speeds or requires port-to-port connectivity. A COCC may be used to connect a Stand-Alone Optical Access Link to a private line transport facility. The COCC provides connectivity up to 1.544 Mbps, or up to 45 Mbps, or up to 155 Mbps or up to 622 Mbps. (C)(M)

Certain material on this page formerly appeared on Pages 8-329.
Certain material previously found on this page can now be found on Page 8-331.

8. ADVANCED COMMUNICATIONS NETWORKS

8.5 ATM SERVICE (T)

8.5.1 GENERAL

B. Service Elements

(T)

9. 45 or 155 Mbps OAL Protection Option

(M)

45 or 155 Mbps OAL Protection provides added reliability to ATM Service transported over fiber optic facilities. This feature provides a separate facility path within the same conduit, cable, sheath, etc. for the protection system between the Serving Wire Center and the network interface. The 45 or 155 Mbps OAL Protection does not provide for diverse facilities into the building. A customer may request that the facilities used to provide ATM Service be specially routed. The regulations, rates and charges for Special Facilities Routing (i.e., Diversity) are as set forth in Section 11, following. (M)

This added protection is provided by ensuring that backup electronics and two logically separate facility paths are used in the provisioning of the service. One primary (or working) service path is established between the Serving Wire Center and the customer designated premises. In addition, a protect path is provisioned between the customer designated premises and the Serving Wire Center. In the event that the working facility or electronics fail, or the service performance becomes impaired, i.e., the bit error rate degenerates to less than or equal to 10 to the minus 6, the facility automatically switches to the service protect path in order to maintain a near continuous flow of information between locations.

The offering of 45 or 155 Mbps OAL Protection contemplates the use of existing facilities. Facilities requiring Special Construction will be provided under Tariff F.C.C. No. 2.

Certain material on this page formerly appeared on Pages 8-330.

8. ADVANCED COMMUNICATIONS NETWORKS

8.5 ATM SERVICE (Cont'd) (T)

8.5.2 REGULATIONS

A. General

1. The initial order for ATM Service must be for a fixed period of 12, 24, 36, 48 or 60 months, as set forth in 8.5.4. At the end of the initial service period, the service may be obtained on a month-to-month basis or for any of the specified fixed service periods. Effective November 16, 2001, 72 and 84 month fixed period service rate plans will no longer be available to new customers or for renewal by existing customers. (T) (C) (C) (C)

   If an existing customer, with an existing Fixed Period Service Rate Plan, places a subsequent order to add an ATM Access Link at the same customer premises where fiber facilities are currently available, the new ATM Access Link may be initially ordered as month-to-month. (C) (C)

2. A subsequent order to add ATM Access Links and/or logical connections (VCCs or VPCs) to an existing fixed period service pricing plan must be for a fixed period of 12, 24, 36, 48 or 60 months, or for the remainder of the existing fixed period service pricing plan, provided the remainder of the existing plan is at least the minimum period for that plan, as set forth in 8.5.4.A. If the remaining term is less than the associated minimum period, the minimum term for the added Access Link and/or logical connections shall be the associated minimum period. (C) (C)

3. A customer may access ATM Service via an ATM Access Link or via Company-provided digital PLTS. A customer utilizing PLTS to access ATM Service does not incur a nonrecurring charge or monthly rate for an ATM Access Link, but does incur a monthly rate and a nonrecurring charge for a Central Office Connecting Channel and all other monthly rates and nonrecurring charges normally associated with the ordering, installing and provisioning of ATM Service, as set forth in 8.5.5. (C) (T) (T)

8. ADVANCED COMMUNICATIONS NETWORKS

8.5 ATM SERVICE (Cont'd)

8.5.3 RATE ELEMENTS

A. ATM Access Link

1. DS1 Access Link

   A nonrecurring charge and monthly rate apply per DS1.

2. IMA Access Link

   A nonrecurring charge and monthly rate apply per DS1 bundle. When increasing the number of existing Mbps, a subsequent order charge will apply per 1.544 Mbps increment added. (C) | (C)

3. Optical Access Link (OAL)

   - A nonrecurring charge and monthly rate, both based on the speed of the OAL (45 Mbps, 155 Mbps or 622 Mbps), apply per OAL for each physical connection to the ATM Service Network. The OAL may be optioned with 45 Mbps or 155 Mbps Protection.

4. Stand-Alone Optical Access Link (SAOAL)

   A nonrecurring charge and monthly rate, both based on the speed of the SAOAL (45 Mbps or 155 Mbps), apply per SAOAL. The SAOAL may be optioned with 45 Mbps or 155 Mbps Protection.

8. ADVANCED COMMUNICATIONS NETWORKS

8.5 ATM SERVICE
8.5.3 RATE ELEMENTS (Cont'd)

B. ATM and IMA Ports

A nonrecurring and recurring charge applies per port based on the transmission speed. ATM Port transmission speeds are 1.544 Mbps, 45 Mbps, 155 Mbps and 622 Mbps. IMA Port transmission speeds are 3 Mbps, 4.6 Mbps, 6.1 Mbps, 7.7 Mbps, 9.2 Mbps, 10.7 Mbps and 12.3 Mbps. When increasing the number of existing Mbps associated with an IMA Port, a subsequent order charge will apply per 1.544 Mbps increment added. (C) | (C)

C. Cell Transfer

A nonrecurring charge applies to each logical connection (VCC or VPC) on an ATM Service configuration. A monthly rate applies for the total bandwidth of all logical connections, based on the Service Classes, CBR, VBR-rt, VBR-nrt, ABR or UBR, the number of 64 kbps, 75 kbps 1 Mbps, 1.544 Mbps or 1.787 Mbps increments of bandwidth provided on the connections.

Bandwidth increments of 75 kbps and 1.787 Mbps are only available with the CBR Service Class.

8. ADVANCED COMMUNICATIONS NETWORKS

8.5 ATM SERVICE (T)
8.5.3 RATE ELEMENTS

D. Grandfathered Cell Transfer as of November 16, 2001 (C)(M)

1. A "First" nonrecurring charge per port applies for the first logical connection (VCC or VPC) on an ATM Service configuration. An "Each Additional" (T) nonrecurring charge applies for each additional logical connection ordered on the same ATM Service Port, installed at the same time (same due date) for the same (T) customer of record as the first logical connection. A Cell Transfer fixed nonrecurring charge also applies per port, based on the port speed. A Cell Transfer fixed monthly rate applies, based on the port speed, for each ATM (T) Service OAL, or Synchronous Service Transport (SST), or DS3 connection to the network supporting ATM Service. A variable, or incremental, monthly rate (T) applies per port for the total bandwidth of all logical connections, based on the service type (PCRS, SCRS or UBR) of the connections, the speed of the port and (T) the number of 64 kbps, 75 kbps 1 Mbps, 1.544 Mbps, 1.787 Mbps, 40.7 Mbps or 149 Mbps increments of bandwidth, or fraction thereof, provided on the connections.

2. Bandwidth increments of 75 kbps, 1.787 Mbps, 40.7 Mbps, and 149 Mbps are not available with SCRS. Bandwidth increments of 75 kbps, 1.544 Mbps, 1.787 Mbps, 40.7 Mbps and 149 Mbps are not available with UBR. (T)(M)

3. A SCRS Maximum Burst Size monthly rate applies per VCC based on the cell level of 100 or 200. In addition, the Maximum Burst Size of 200 Cells requires the customer to purchase a minimum of 4 Mbps of SCRS for each VCC.

4. A nonrecurring charge applies for each subsequent order to add or to change logical connections on an existing ATM Service configuration, in addition to the (T) "First" and "Each Additional" nonrecurring charges for the logical connections in the subsequent order.

Certain material on this page formerly appeared on Pages 8-334.
Certain material previously found on this page can now be found on Page 8-335.1.

8. ADVANCED COMMUNICATIONS NETWORKS

8.5 ATM SERVICE
8.5.3 RATE ELEMENTS

D. Grandfathered Cell Transfer (Cont'd)

5. "First" nonrecurring charge applies for the first logical connection VCC on an LSS/LSS or LSS/ATM Service configuration. "Each Additional" nonrecurring charge applies for each additional logical connection ordered on the same LSS/LSS or LSS/ATM Service configuration, installed at the same time (same due date) for the same customer of record as the first logical connection. A nonrecurring charge applies for each subsequent order to add or to change logical connections on an existing LSS/LSS or LSS/ATM Service configuration, in addition to the "First" and "Each Additional" nonrecurring charges for the logical connections in the subsequent order.

E. Central Office Connecting Channel (COCC)

A nonrecurring charge and a monthly rate apply per COCC, per speed of up to 1.544 Mbps, up to 45 Mbps, or up to 155 Mbps, or up to 622 Mbps. The COCC charges are applicable only if the ATM Access Link is provided by the customer or is provided out of Section 7, 17 or 15. (C)

8. ADVANCED COMMUNICATIONS NETWORKS

8.5 ATM SERVICE (Cont'd) (T)

8.5.4 PRICING PLANS

A. General

ATM Service must be initially ordered under a Fixed Period Service Rate Plan. (T)
The rate plan allows the ATM Service customer the assurance of no Company- (T)
initiated increases in rates during the fixed period. At the end of the initial service period, the service may be obtained on a month-to-month basis or any of the specified fixed period service rate periods.

If an existing customer, with an existing Fixed Period Service Rate Plan, places a subsequent order to add an ATM Access Link at the same customer premises (C)
where facilities are currently available, the new ATM Access Link may be initially (C)
ordered as month-to-month.

B. Fixed Period Service Rate Plan (T)

ATM customers may order 12, 24, 36, 48 or 60 month fixed period service rate (C)
plans for transmission speeds of 1.544 Mbps, 45 Mbps, 155 Mbps and 622 Mbps
at the rates set forth in 8.5.5, following. Effective November 16, 2001, 72 and 84
month fixed period service rate plans will no longer be available to new customers
or for renewal by existing customers. Rates for existing customers as of
November 16, 2001 are set forth in 8.5.6, following. (C)

8. ADVANCED COMMUNICATIONS NETWORKS

8.5 ATM SERVICE (T)
8.5.4 PRICING PLANS (Cont'd)

C. Terms and Conditions

1. Monthly rates for the entire fixed period will be frozen from Company-initiated increases, at the rates in effect for the fixed period on the service date.

2. The customer must specify the length of the fixed period at the time the service is ordered.

3. ATM Service rate elements may be ordered under any optional rate plan. For example, the customer may order the Access Link under the 36-month fixed period service rate plan and the Cell Transfer under the 60-month fixed period service rate plan. (T)

4. Fixed Period Rate Plans established on or before August 31, 1998, will automatically receive a rate decrease if the Company decreases rates during the term of the plan. Effective September 1, 1998, customers establishing a Fixed Period Rate Plan, will not receive a rate decrease if the Company decreases rates during the term of the plan.

8. ADVANCED COMMUNICATIONS NETWORKS

8.5 ATM SERVICE (T)

8.5.4 PRICING PLANS

C. Terms and Conditions (Cont'd) (T)

5. At the end of the fixed period, the customer may select a new fixed period, convert to monthly rates (month-to-month) or terminate the service. The rates will be those in effect at the time the new fixed period begins. Should the customer fail to make a choice by the end of a fixed period, the service will automatically revert to the effective monthly (month-to-month) rates. If service is continued under the pricing plans, nonrecurring charges will not apply.

6. The minimum service period for fixed period service rate plan is 12 months. When VCCs and VPCs are added to an existing ATM Service, the minimum (T) service period for the added VCCs and VPCs is one month. VCCs and VPCs' may be added to an existing fixed period on a month-to-month basis or under the same optional rate plan as the existing ATM Service but at the rates and charges (T) in effect at the time of the addition.

7. Phased-In Installation will apply to all ATM Service customers whose fixed-period service pricing plan began after April 7, 1998.

   Under Phased-In Installation, monthly rates and nonrecurring charges for all ATM Service elements installed during the first 12 months of a multiyear, fixed-period service plan, or installed at anytime during a 1-year, fixed-period service plan, will be those rates and charges which were in effect on the date the first element of the service configuration was installed; unless a decrease in a rate or charge occurs, in which case the lower rate or charge applies.

8. ADVANCED COMMUNICATIONS NETWORKS

8.5 ATM SERVICE
8.5.4 PRICING PLANS

D. ATM Service Renewal Discount Plan for Fixed Period Rate Plans (T)

ATM customers with an existing Fixed Period Rate Plan (Pricing Plan) which has expired or is within 3 months of the expiration date may subscribe to a new 12-Month or greater Pricing Plan and receive a discount on selected rate elements from the current Fixed Period Rate Plan monthly rates and at a reduced TLA%. The Termination Liability and Wavier Policy as set forth in 8.1.5, preceding, will not apply to the existing rate plan that is being renewed. (N)

The new discounted 12-Month or greater Fixed Period Rate Plan will be rated at the current tariff rates for the selected Pricing Plan less the applicable renewal discount as set forth below. The discount will only be applied to Pricing Plan recurring rates for selected rate elements and will not be applied to nonrecurring rates or rate elements on month-to-month. A new minimum service period does not apply to these renewals, however the Termination Liability and Wavier Policy as set forth in 8.1.5, preceding, will apply to the new Pricing Plan but with a 20% TLA in lieu of 40%.

This ATM Service Renewal Discount Plan is only available where facilities exist.

Discounted Rate Elements	**Discount** %
• ATM Ports:	
- 1.544 Mbps[1]	5%
- 44.736 Mbps to 622 Mbps	10%
• Cell Transfer:	
- 1.544 Mbps[1]	5%
- 44.736 Mbps to 622 Mbps	10%
• Central Office Connecting Channel COCC):	
- Up to 1.544 Mbps[1]	5%
- Up to 45, 155, or 622 Mbps	10%

[1] This discount is not available to IMA Ports. (N)

8. ADVANCED COMMUNICATIONS NETWORKS

8.5 ATM SERVICE
8.5.4 PRICING PLANS (Cont'd)

E. Changes to Rate Plans (T)

Services rated under the month-to-month plan or an existing fixed period service rate plan may be upgraded to a fixed period service rate plan at any time the customer chooses without incurring nonrecurring charges or Termination Liability. This upgrade will be allowed provided the channel interface and the customer designated premises remain the same. Additionally, the new fixed period service rate plan must meet or exceed the fixed period service rate plan being upgraded.

The monthly rates will be those in effect at the time the new fixed period begins. New minimum service periods apply to upgrades in rate plans.

If a customer chooses to change an existing service provided under a fixed period service rate plan to a month-to-month plan, the change will be treated as a discontinuance of the existing service and an establishment of new service. Appropriate Termination Liability, as set forth in 8.1.5, and a new minimum period will apply in addition to the new monthly rates for the service.

F. Discontinuance of Service (T)

If the customer chooses to discontinue all or a portion of the service (equaling more than 20% of the total monthly rate) prior to the expiration of the fixed period service, Termination Liability, as set forth in 8.1.5, will apply. A minimum billing level of 80% of the total monthly rates will be used to calculate Termination Liability. The minimum billing level is based on the monthly rate as of the service established date, plus any additions to the service after the service established date.

8. ADVANCED COMMUNICATIONS NETWORKS

8.5 ATM SERVICE (Cont'd)

8.5.5 RATES AND CHARGES

A. Monthly

ATM Service may be ordered as monthly once the initial requirement to order the service as a fixed period service rate plan has been satisfied.

	USOC	NONRECURRING CHARGE	MONTHLY RATE
1. ATM Access Links			
• DS1 Access Link, per Access Link			
- 1.544 Mbps	N7A1M	$ 500.00	$ 138.00
• IMA Access Link, per Access Link			
- 3 Mbps	N7A1M	1,000.00	276.00
- 4.6 Mbps	N7A1M	1,500.00	414.00
- 6.1 Mbps	N7A1M	2,000.00	552.00
- 7.7 Mbps	N7A1M	2,500.00	690.00
- 9.2 Mbps	N7A1M	3,000.00	828.00
- 10.7 Mbps	N7A1M	3,500.00	966.00
- 12.3 Mbps	N7A1M	4,000.00	1,104.00

	USOC	NONRECURRING CHARGE	
• Per Subsequent Order for IMA Access Link, per 1.544 Mbps, DS1	NHCBL	$500.00	(N)

(N)

8. ADVANCED COMMUNICATIONS NETWORKS

8.5 ATM SERVICE (T)
8.5.5 RATES AND CHARGES
A. Monthly (Cont'd)

	USOC	NONRECURRING CHARGE	MONTHLY RATE	
• Optical Access Link, per Access Link				(T)(M)
- 45 Mbps	N7AXM	$1,000.00 (I)	$ 914.00 (I)	
- 155 Mbps	N7AXM	1,000.00 (I)	1,371.00 (I)	(M)
- 622 Mbps	N7AXM	1,000.00	3,153.00	(N)
- 45 Mbps with protection	N7ARM	1,500.00 (I)	1,650.00 (I)	(T)(M)
- 155 Mbps with protection	N7ARM	1,500.00 (I)	3,504.00 (I)	(T)(M)
• Stand-Alone Optical Access Link, per Access Link				(T)
- 45 Mbps	N1AXM	1,000.00 (I)	914.00 (I)	
- 155 Mbps	N1AXM	1,000.00 (I)	1,371.00 (I)	
- 45 Mbps with protection	N1ARM	1,500.00 (I)	1,650.00 (I)	(T)
- 155 Mbps with protection	N1ARM	1,500.00 (I)	3,504.00 (I)	(T)
2. ATM Ports, per port				(T)(M)
• 1.544 Mbps	C3TXM	200.00 (I)	240.00 (R)	
• 45 Mbps	C3TXM	200.00 (I)	600.00 (I)	
• 155 Mbps	C3TXM	200.00 (I)	1,090.00 (I)	(M)
• 622 Mbps	C3TXM	200.00	2,500.00	(N)

Certain material on this page formerly appeared on pages 8-340 and 8-342.

8. ADVANCED COMMUNICATIONS NETWORKS

8.5 ATM SERVICE
8.5.5 RATES AND CHARGES

A. Monthly (Cont'd)

	USOC	NONRECURRING CHARGE	MONTHLY RATE
3. IMA Ports, per port			
• 3 Mbps	UUTAX	$ 400.00	$ 480.00
• 4.6 Mbps	UUTBX	600.00	720.00
• 6.1 Mbps	UUTCX	800.00	960.00
• 7.7 Mbps	UUTDX	1,000.00	1,200.00
• 9.2 Mbps	UUTEX	1,200.00	1,440.00
• 10.7 Mbps	UUTFX	1,400.00	1,680.00
• 12.3 Mbps	UUTGX	1,600.00	1,920.00

	USOC	NONRECURRING CHARGE	
• Per Subsequent Order for IMA Ports, per 1.544 Mbps, DS1	NHCBM	$200.00	(N) (N)
4. Cell Transfer			
• Per VCC	NHCNA	100.00	
• Per VPC	NHCNB	100.00	
• Per Subsequent Order for VCC or VPC	NR9AZ	160.00	(M) (M)

Certain material found on this page formerly appeared on Page 8-347.

8. ADVANCED COMMUNICATIONS NETWORKS

8.5 ATM SERVICE (T)

8.5.5 RATES AND CHARGES

A. Monthly

4. Cell Transfer (Cont'd)

	USOC	MONTHLY RATE	
• Constant Bit Rate (CBR), per 64 kbps [1] Increment of total bandwidth			(N)
- 1.544 Mbps port	CTNSM	$3.20	
- IMA Port, per port: 3, 4.6, 6.1, 7.7,9.2, 10.7, or 12.3 Mbps	CTNSM	3.20	
- 45 Mbps port	CTNSM	3.20	
- 155 Mbps port	CTNSM	3.20	
- 622 Mbps port	CTNSM	3.20	
• Constant Bit Rate (CBR), per 75 kbps [1] Increment of total bandwidth			
- 1.544 Mbps port	CTNWM	3.71	
- IMA Port, per port: 3, 4.6, 6.1, 7.7,9.2, 10.7, or 12.3 Mbps	CTNWM	3.71	
- 45 Mbps port	CTNWM	3.71	
- 155 Mbps port	CTNWM	3.71	
- 622 Mbps port	CTNWM	3.71	(N)

[1] 64 kbps and 75 kbps PVC increments are only available up to 1.536 Mbps.

Material previously found on this page is no longer available.

8. ADVANCED COMMUNICATIONS NETWORKS

8.5 ATM SERVICE (T)
8.5.5 RATES AND CHARGES
A. Monthly
4. Cell Transfer (Cont'd)

	USOC	MONTHLY RATE	
• Constant Bit Rate (CBR), per 1 Mbps Increment of total bandwidth			(N)
- 1.544 Mbps port	CTNUM	$45.00	
- IMA Port, per port: 3, 4.6, 6.1, 7.7,9.2, 10.7, or 12.3 Mbps	CTNUM	45.00	
- 45 Mbps port	CTNUM	45.00	
- 155 Mbps port	CTNUM	45.00	
- 622 Mbps port	CTNUM	45.00	
• Constant Bit Rate (CBR), per 1.787 Mbps Total bandwidth			
- IMA Port, per port: 3, 4.6, 6.1, 7.7,9.2, 10.7, or 12.3 Mbps	CTNYM	80.42	
- 45 Mbps port	CTNYM	80.42	
- 155 Mbps port	CTNYM	80.42	
- 622 Mbps port	CTNYM	80.42	(N)

Material previously found on this page is no longer available.

8. ADVANCED COMMUNICATIONS NETWORKS

8.5 ATM SERVICE (T)

8.5.5 RATES AND CHARGES

A. Monthly

4. Cell Transfer (Cont'd)

	USOC	MONTHLY RATE
• Variable Bit Rate - real time, (VBR-rt), per 64 kbps [1] Increment of total bandwidth		
- 45 Mbps port	CTNLM	$ 2.72
- 155 Mbps port	CTNLM	2.72
- 622 Mbps port	CTNLM	2.72
• Variable Bit Rate - real time, (VBR-rt), per 1 Mbps Increment of total bandwidth		
- 45 Mbps port	CTNMM	38.25
- 155 Mbps port	CTNMM	38.25
- 622 Mbps port	CTNMM	38.25

(N)

[1] 64 kbps PVC increments are only available up to 1.536 Mbps. (N)

Material previously found on this page is no longer available.

8. ADVANCED COMMUNICATIONS NETWORKS

8.5 ATM SERVICE (T)

8.5.5 RATES AND CHARGES

A. Monthly

4. Cell Transfer (Cont'd)

	USOC	MONTHLY RATE
• Variable Bit Rate - non-real time, (VBR-nrt), per 64 kbps [1] Increment of total bandwidth		
- 1.544 Mbps port	CTNRM	$ 2.40
- IMA Port, per port: 3, 4.6, 6.1, 7.7,9.2, 10.7, or 12.3 Mbps	CTNRM	2.40
- 45 Mbps port	CTNRM	2.40
- 155 Mbps port	CTNRM	2.40
- 622 Mbps port	CTNRM	2.40
• Variable Bit Rate - non-real time, (VBR-nrt), per 1 Mbps Increment of total bandwidth		
- 1.544 Mbps port	CTNVM	33.75
- IMA Port, per port: 3, 4.6, 6.1, 7.7,9.2, 10.7, or 12.3 Mbps	CTNVM	33.75
- 45 Mbps port	CTNVM	33.75
- 155 Mbps port	CTNVM	33.75
- 622 Mbps port	CTNVM	33.75

(N)

[1] 64 kbps PVC increments are only available up to 1.536 Mbps. (N)

Material previously found on this page is no longer available.

8. ADVANCED COMMUNICATIONS NETWORKS

8.5 ATM SERVICE
8.5.5 RATES AND CHARGES

A. Monthly

4. Cell Transfer (Cont'd)

	USOC	MONTHLY RATE	
• Cell Bursting for VBR-rt and VBR-nrt,			
- 100 Cells	AS3M1	-	
- 200 Cells	CTS2M	$20.00	(M)
• Available Bit Rate Service, (ABR), per 64 kbps[1] Increment of total bandwidth			
- 45 Mbps port	CTNOM	1.60	
- 155 Mbps port	CTNOM	1.60	
- 622 Mbps port	CTNOM	1.60	
• Available Bit Rate (ABR), (ABR), per 1 Mbps Increment of total bandwidth			
- 45 Mbps port	CTNPM	22.50	
- 155 Mbps port	CTNPM	22.50	
- 622 Mbps port	CTNPM	22.50	

[1] 64 kbps PVC increments are only available up to 1.536 Mbps.

Certain material previously found on this page can now be found on Page 8-342.

8. ADVANCED COMMUNICATIONS NETWORKS

8.5 ATM SERVICE
8.5.5 RATES AND CHARGES

A. Monthly

4. Cell Transfer (Cont'd)

	USOC	MONTHLY RATE	
• Unspecified Bit Rate, per 64 kbps[1] Increment of total bandwidth			
- 1.544 Mbps port	CTUEM	$ 1.12	
- IMA Port, per port: 3, 4.6, 6.1, 7.7,9.2, 10.7, or 12.3 Mbps	CTUEM	1.12	
- 45 Mbps port	CTUEM	1.12	
- 155 Mbps port	CTUEM	1.12	
- 622 Mbps port	CTUEM	1.12	
• Unspecified Bit Rate, per 1 Mbps Increment of total bandwidth			
- 1.544 Mbps port	CTUCM	15.75	
- IMA Port, per port: 3, 4.6, 6.1, 7.7,9.2, 10.7, or 12.3 Mbps	CTUCM	15.75	(T)
- 45 Mbps port	CTUCM	15.75	
- 155 Mbps port	CTUCM	15.75	
- 622 Mbps port	CTUCM	15.75	

[1] 64 kbps PVC increments are only available up to 1.536 Mbps.

8. ADVANCED COMMUNICATIONS NETWORKS

8.5 ATM SERVICE (T)
8.5.5 RATES AND CHARGES
A. Monthly (Cont'd)

	USOC	NONRECURRING CHARGE	MONTHLY RATE	
5. Central Office Connecting Channel (COCC), per COCC				(T)
- Up to 1.544 Mbps (Includes IMA)	CFN2M	$25.00	$ 1.00	(N)
- Up to 45, 155 or 622 Mbps	CFN2M	25.00	15.00	(N)

Certain material previously found on this page can now be found on Page 8-348.
Certain material on this page formerly appeared on Page 8-350.

8. ADVANCED COMMUNICATIONS NETWORKS

8.5 ATM SERVICE
8.5.5 RATES AND CHARGES (Cont'd)

B. 12 Months

	USOC	NONRECURRING CHARGE	MONTHLY RATE
1. ATM Access Links			
• DS1 Access Link, per Access Link			
- 1.544 Mbps	N7A11	$ 500.00	$ 131.10
• IMA Access Link, per Access Link			
- 3 Mbps	N7A11	1,000.00	262.20
- 4.6 Mbps	N7A11	1,500.00	393.30
- 6.1 Mbps	N7A11	2,000.00	524.40
- 7.7 Mbps	N7A11	2,500.00	655.50
- 9.2 Mbps	N7A11	3,000.00	786.60
- 10.7 Mbps	N7A11	3,500.00	917.70
- 12.3 Mbps	N7A11	4,000.00	1,048.80

(N)

	USOC	NONRECURRING CHARGE
• Per Subsequent Order for IMA Access Link, per 1.544 Mbps, DS1	NHCBL	$500.00

(N)

8. ADVANCED COMMUNICATIONS NETWORKS

8.5 ATM SERVICE
8.5.5 RATES AND CHARGES

B. 12 Months (Cont'd)

	USOC	NONRECURRING CHARGE	MONTHLY RATE	
• Optical Access Link, per Access Link				
- 45 Mbps	N7AX1	$1,000.00	$ 868.30	
- Vintage				(T)
10/02/95 through 11/15/01			674.50	(T)
- 155 Mbps	N7AX1	1,000.00	1,302.45	
- Vintage				(T)
10/02/95 through 11/15/01			1,007.00	(T)
- 622 Mbps	N7AX1	1,000.00	2,995.35	
- 45 Mbps with protection	N7AR1	1,500.00	1,567.50	
- Vintage				(T)
3/15/97 through 11/15/01			1,140.00	(T)
- 155 Mbps with protection	N7AR1	1,500.00	3,328.80	
- Vintage				(T)
3/15/97 through 11/15/01			2,660.00	(T)
• Stand-Alone Optical Access Link, per Access Link				
- 45 Mbps	N1AX1	1,000.00	868.30	
- Vintage				(T)
10/02/95 through 11/15/01			674.50	(T)
- 155 Mbps	N1AX1	1,000.00	1,302.45	
- Vintage				(T)
10/02/95 through 11/15/01			1,007.00	(T)
- 45 Mbps with protection	N1AR1	1,500.00	1,567.50	
- Vintage				(T)
3/15/97 through 11/15/01			1,140.00	(T)
- 155 Mbps with protection	N1AR1	1,500.00	3,328.80	
- Vintage				(T)
3/15/97 through 11/15/01			2,660.00	(T)

8. ADVANCED COMMUNICATIONS NETWORKS

8.5 ATM SERVICE
8.5.5 RATES AND CHARGES

B. 12 Months (Cont'd)

	USOC	NONRECURRING CHARGE	MONTHLY RATE	
2. ATM Ports, per port				
• 1.544 Mbps	C3TX1	$200.00	$228.00	
- Vintage				(T)
7/15/97 through 11/15/01			266.00	(T)
• 45 Mbps	C3TX1	200.00	570.00	
- Vintage				(T)
10/02/95 through 11/15/01			418.00	(T)
• 155 Mbps	C3TX1	200.00	1,035.50	
- Vintage				(T)
03/15/97 through 11/15/01			760.00	(T)
• 622 Mbps	C3TX1	200.00	2,375.00	

8. ADVANCED COMMUNICATIONS NETWORKS

8.5 ATM SERVICE
8.5.5 RATES AND CHARGES

B. 12 Months (Cont'd)

	USOC	NONRECURRING CHARGE	MONTHLY RATE
3. IMA Ports, per port			
• 3 Mbps	UUTA1	$ 400.00	$ 456.00
• 4.6 Mbps	UUTB1	600.00	684.00
• 6.1 Mbps	UUTC1	800.00	912.00
• 7.7 Mbps	UUTD1	1,000.00	1,140.00
• 9.2 Mbps	UUTE1	1,200.00	1,368.00
• 10.7 Mbps	UUTF1	1,400.00	1,596.00
• 12.3 Mbps	UUTG1	1,600.00	1,824.00

	USOC	NONRECURRING CHARGE	
• Per Subsequent Order for IMA Ports, per 1.544 Mbps, DS1	NHCBM	$200.00	(N) (N)
4. Cell Transfer			
• Per VCC	NHCNA	100.00	
• Per VPC	NHCNB	100.00	
• Per Subsequent Order for VCC or VPC	NR9AZ	160.00	(M) (M)

Certain material found on this page formerly appeared on Page 8-357.

8. ADVANCED COMMUNICATIONS NETWORKS

8.5 ATM SERVICE (T)
8.5.5 RATES AND CHARGES
B. 12 Months
4. Cell Transfer (Cont'd)

	USOC	MONTHLY RATE
• Constant Bit Rate (CBR), per 64 kbps [1] Increment of total bandwidth		
- 1.544 Mbps port	CTNS1	$3.04
- IMA Port, per port: 3, 4.6, 6.1, 7.7,9.2, 10.7, or 12.3 Mbps	CTNS1	3.04
- 45 Mbps port	CTNS1	3.04
- 155 Mbps port	CTNS1	3.04
- 622 Mbps port	CTNS1	3.04
• Constant Bit Rate (CBR), per 75 kbps [1] Increment of total bandwidth		
- 1.544 Mbps port	CTNW1	3.53
- IMA Port, per port: 3, 4.6, 6.1, 7.7,9.2, 10.7, or 12.3 Mbps	CTNW1	3.53
- 45 Mbps port	CTNW1	3.53
- 155 Mbps port	CTNW1	3.53
- 622 Mbps port	CTNW1	3.53

(N)

[1] 64 kbps and 75 kbps PVC increments are only available up to 1.536 Mbps. (N)

Certain material previously found on this page can now be found on Pages 8-351 and 8-400.

8. ADVANCED COMMUNICATIONS NETWORKS

8.5 ATM SERVICE (T)
8.5.5 RATES AND CHARGES
B. 12 Months
4. Cell Transfer (Cont'd)

	USOC	MONTHLY RATE	
• Constant Bit Rate (CBR), per 1 Mbps Increment of total bandwidth			(N)
- 1.544 Mbps port	CTNU1	$42.75	
- IMA Port, per port: 3, 4.6, 6.1, 7.7,9.2, 10.7, or 12.3 Mbps	CTNU1	42.75	
- 45 Mbps port	CTNU1	42.75	
- 155 Mbps port	CTNU1	42.75	
- 622 Mbps port	CTNU1	42.75	
• Constant Bit Rate (CBR), per 1.787 Mbps Total bandwidth			
- IMA Port, per port: 3, 4.6, 6.1, 7.7,9.2, 10.7, or 12.3 Mbps	CTNY1	76.39	
- 45 Mbps port	CTNY1	76.39	
- 155 Mbps port	CTNY1	76.39	
- 622 Mbps port	CTNY1	76.39	(N)

Certain material previously found on this page can now be found on Page 8-401.

8. ADVANCED COMMUNICATIONS NETWORKS

8.5 ATM SERVICE (T)

8.5.5 RATES AND CHARGES

B. 12 Months

4. Cell Transfer (Cont'd)

	USOC	MONTHLY RATE
• Variable Bit Rate - real time, (VBR-rt), per 64 kbps [1] Increment of total bandwidth		
- 45 Mbps port	CTNL1	$ 2.58
- 155 Mbps port	CTNL1	2.58
- 622 Mbps port	CTNL1	2.58
• Variable Bit Rate - real time, (VBR-rt), per 1 Mbps Increment of total bandwidth		
- 45 Mbps port	CTNM1	36.34
- 155 Mbps port	CTNM1	36.34
- 622 Mbps port	CTNM1	36.34

(N)

[1] 64 kbps PVC increments are only available up to 1.536 Mbps. (N)

Certain material previously found on this page can now be found on Page 8-402.

8. ADVANCED COMMUNICATIONS NETWORKS

8.5 ATM SERVICE (T)
8.5.5 RATES AND CHARGES
B. 12 Months
4. Cell Transfer (Cont'd)

	USOC	MONTHLY RATE
• Variable Bit Rate - non-real time, (VBR-nrt), per 64 kbps [1] Increment of total bandwidth		
- 1.544 Mbps port	CTNR1	$ 2.28
- IMA Port, per port: 3, 4.6, 6.1, 7.7,9.2, 10.7, or 12.3 Mbps	CTNR1	2.28
- 45 Mbps port	CTNR1	2. 28
- 155 Mbps port	CTNR1	2. 28
- 622 Mbps port	CTNR1	2. 28
• Variable Bit Rate - non-real time, (VBR-nrt), per 1 Mbps Increment of total bandwidth		
- 1.544 Mbps port	CTNV1	32.06
- IMA Port, per port: 3, 4.6, 6.1, 7.7,9.2, 10.7, or 12.3 Mbps	CTNV1	32.06
- 45 Mbps port	CTNV1	32.06
- 155 Mbps port	CTNV1	32.06
- 622 Mbps port	CTNV1	32.06

(N)

[1] 64 kbps PVC increments are only available up to 1.536 Mbps. (N)

Certain material previously found on this page can now be found on Page 8-403.

8. ADVANCED COMMUNICATIONS NETWORKS

8.5 ATM SERVICE
8.5.5 RATES AND CHARGES
B. 12 Months
4. Cell Transfer (Cont'd)

	USOC	MONTHLY RATE	
• Cell Bursting for VBR-rt and VBR-nrt			
- 100 Cells	AS3M1	-	
- 200 Cells	CTS21	$19.00	
• Available Bit Rate Service, (ABR), per 64 kbps[1] Increment of total bandwidth			(M)
- 45 Mbps port	CTNO1	1.52	
- 155 Mbps port	CTNO1	1.52	
- 622 Mbps port	CTNO1	1.52	
• Available Bit Rate Service, (ABR), per 1 Mbps Increment of total bandwidth			
- 45 Mbps port	CTNP1	21.38	
- 155 Mbps port	CTNP1	21.38	
- 622 Mbps port	CTNP1	21.38	

[1] 64 kbps PVC increments are only available up to 1.536 Mbps.

Certain material previously found on this page can now be found on Page 8-352.

8. ADVANCED COMMUNICATIONS NETWORKS

8.5 ATM SERVICE
8.5.5 RATES AND CHARGES

B. 12 Months

4. Cell Transfer (Cont'd)

	USOC	MONTHLY RATE	
• Unspecified Bit Rate, per 64 kbps[1] Increment of total bandwidth			
- 1.544 Mbps port	CTUE1	$1.06	
- Vintage			(T)
6/30/98 through 11/15/01		0.76	(T)
- IMA Port, per port: 3, 4.6, 6.1, 7.7,9.2, 10.7, or 12.3 Mbps	CTUE1	1.06	
- 45 Mbps port	CTUE1	1.06	
- Vintage			(T)
6/30/98 through 11/15/01		0.76	(T)
- 155 Mbps port	CTUE1	1.06	
- Vintage			(T)
6/30/98 through 11/15/01		0.76	(T)
- 622 Mbps port	CTUE1	1.06	

[1] 64 kbps PVC increments are only available up to 1.536 Mbps.

8. ADVANCED COMMUNICATIONS NETWORKS

8.5 ATM SERVICE
8.5.5 RATES AND CHARGES

B. 12 Months

4. Cell Transfer (Cont'd)

	USOC	MONTHLY RATE	
• Unspecified Bit Rate, per 1 Mbps Increment of total bandwidth			
- 1.544 Mbps port	CTUC1	$14.96	
- Vintage			(T)
6/30/98 through 11/15/01		11.40	(T)
- IMA Port, per port: 3, 4.6, 6.1, 7.7,9.2, 10.7, or 12.3 Mbps	CTUC1	14.96	
- 45 Mbps port	CTUC1	14.96	
- Vintage			(T)
6/30/98 through 11/15/01		11.40	(T)
- 155 Mbps port	CTUC1	14.96	
- Vintage			(T)
6/30/98 through 11/15/01		11.40	(T)
- 622 Mbps port	CTUC1	14.96	

8. ADVANCED COMMUNICATIONS NETWORKS

8.5 ATM SERVICE (T)

8.5.5 RATES AND CHARGES

B. 12 Months

	USOC	NONRECURRING CHARGE	MONTHLY RATE	
5. Central Office Connecting Channel (COCC), per COCC				(T)
- Up to 1.544 Mbps (Includes IMA)	CFN21	$25.00	$ 0.95	(N)
- Up to 45, 155 or 622 Mbps	CFN21	25.00	14.25	(N)

Certain material previously found on this page can now be found on Page 8-406.

8. ADVANCED COMMUNICATIONS NETWORKS

8.5 ATM SERVICE
8.5.5 RATES AND CHARGES (Cont'd)

C. 24 Months

	USOC	NONRECURRING CHARGE	MONTHLY RATE
1. ATM Access Links			
• DS1 Access Link, per Access Link			
- 1.544 Mbps	N7A12	$ 500.00	$124.20
• IMA Access Link, per Access Link			
- 3 Mbps	N7A12	1,000.00	248.40
- 4.6 Mbps	N7A12	1,500.00	372.60
- 6.1 Mbps	N7A12	2,000.00	496.80
- 7.7 Mbps	N7A12	2,500.00	621.00
- 9.2 Mbps	N7A12	3,000.00	745.20
- 10.7 Mbps	N7A12	3,500.00	869.40
- 12.3 Mbps	N7A12	4,000.00	993.60

	USOC	NONRECURRING CHARGE	
• Per Subsequent Order for IMA Access Link, per 1.544 Mbps, DS1	NHCBL	$500.00	(N)

(N)

8. ADVANCED COMMUNICATIONS NETWORKS

8.5 ATM SERVICE
8.5.5 RATES AND CHARGES

C. 24 Months (Cont'd)

	USOC	NONRECURRING CHARGE	MONTHLY RATE	
• Optical Access Link, per Access Link				
- 45 Mbps	N7AX2	$1,000.00	$ 822.60	
- Vintage				(T)
10/02/95 through 11/15/01			665.63	(T)
- 155 Mbps	N7AX2	1,000.00	1,233.90	
- Vintage				(T)
10/02/95 through 11/15/01			993.75	(T)
- 622 Mbps	N7AX2	1,000.00	2,837.70	
- 45 Mbps with protection	N7AR2	1,500.00	1,485.00	
- Vintage				(T)
3/15/97 through 11/15/01			1,125.00	(T)
- 155 Mbps with protection	N7AR2	1,500.00	3,153.60	
- Vintage				(T)
3/15/97 through 11/15/01			2,625.00	(T)
• Stand-Alone Optical Access Link, per Access Link				
- 45 Mbps	N1AX2	1,000.00	822.60	
- Vintage				(T)
10/02/95 through 11/15/01			665.63	(T)
- 155 Mbps	N1AX2	1,000.00	1,233.90	
- Vintage				(T)
10/02/95 through 11/15/01			993.75	(T)
- 45 Mbps with protection	N1AR2	1,500.00	1,485.00	
- Vintage				(T)
3/15/97 through 11/15/01			1,125.00	(T)
- 155 Mbps with protection	N1AR2	1,500.00	3,153.60	
- Vintage				(T)
3/15/97 through 11/15/01			2,625.00	(T)

8. ADVANCED COMMUNICATIONS NETWORKS

8.5 ATM SERVICE
8.5.5 RATES AND CHARGES

C. 24 Months (Cont'd)

	USOC	NONRECURRING CHARGE	MONTHLY RATE
2. ATM Ports, per port			
• 1.544 Mbps	C3TX2	$200.00	$ 216.00
- Vintage 7/15/97 through 11/15/01			262.50
• 45 Mbps	C3TX2	200.00	540.00
- Vintage 10/02/95 through 11/15/01			412.50
• 155 Mbps	C3TX2	200.00	981.00
- Vintage 3/15/97 through 11/15/01			750.00
• 622 Mbps	C3TX2	200.00	2,250.00

8. ADVANCED COMMUNICATIONS NETWORKS

8.5 ATM SERVICE
8.5.5 RATES AND CHARGES

C. 24 Months (Cont'd)

	USOC	NONRECURRING CHARGE	MONTHLY RATE
3. IMA Ports, per port			
• 3 Mbps	UUTA2	$ 400.00	$ 432.00
• 4.6 Mbps	UUTB2	600.00	648.00
• 6.1 Mbps	UUTC2	800.00	864.00
• 7.7 Mbps	UUTD2	1,000.00	1,080.00
• 9.2 Mbps	UUTE2	1,200.00	1,296.00
• 10.7 Mbps	UUTF2	1,400.00	1,512.00
• 12.3 Mbps	UUTG2	1,600.00	1,728.00

	USOC	NONRECURRING CHARGE	
• Per Subsequent Order for IMA Ports, per 1.544 Mbps, DS1	NHCBM	$200.00	(N) (N)
4. Cell Transfer			
• Per VCC	NHCNA	100.00	
• Per VPC	NHCNB	100.00	
• Per Subsequent Order for VCC or VPC	NR9AZ	160.00	(M) (M)

Certain material found on this page formerly appeared on Page 8-367.

8. ADVANCED COMMUNICATIONS NETWORKS

8.5 ATM SERVICE (T)
8.5.5 RATES AND CHARGES
C. 24 Months
4. Cell Transfer (Cont'd)

	USOC	MONTHLY RATE
• Constant Bit Rate (CBR), per 64 kbps [1] Increment of total bandwidth		
- 1.544 Mbps port	CTNS2	$2.88
- IMA Port, per port: 3, 4.6, 6.1, 7.7,9.2, 10.7, or 12.3 Mbps	CTNS2	2.88
- 45 Mbps port	CTNS2	2.88
- 155 Mbps port	CTNS2	2.88
- 622 Mbps port	CTNS2	2.88
• Constant Bit Rate (CBR), per 75 kbps [1] Increment of total bandwidth		
- 1.544 Mbps port	CTNW2	3.34
- IMA Port, per port: 3, 4.6, 6.1, 7.7,9.2, 10.7, or 12.3 Mbps	CTNW2	3.34
- 45 Mbps port	CTNW2	3.34
- 155 Mbps port	CTNW2	3.34
- 622 Mbps port	CTNW2	3.34

(N)

[1] 64 kbps and 75 kbps PVC increments are only available up to 1.536 Mbps. (N)

Certain material previously found on this page can now be found on Page 8-361.

8. ADVANCED COMMUNICATIONS NETWORKS

8.5 ATM SERVICE (T)
8.5.5 RATES AND CHARGES
C. 24 Months
4. Cell Transfer (Cont'd)

	USOC	MONTHLY RATE	
• Constant Bit Rate (CBR), per 1 Mbps Increment of total bandwidth			(N)
- 1.544 Mbps port	CTNU2	$40.50	
- IMA Port, per port: 3, 4.6, 6.1, 7.7,9.2, 10.7, or 12.3 Mbps	CTNU2	40.50	
- 45 Mbps port	CTNU2	40.50	
- 155 Mbps port	CTNU2	40.50	
- 622 Mbps port	CTNU2	40.50	
• Constant Bit Rate (CBR), per 1.787 Mbps Total bandwidth			
- IMA Port, per port: 3, 4.6, 6.1, 7.7,9.2, 10.7, or 12.3 Mbps	CTNY2	72.37	
- 45 Mbps port	CTNY2	72.37	
- 155 Mbps port	CTNY2	72.37	
- 622 Mbps port	CTNY2	72.37	(N)

Certain material previously found on this page can now be found on Pages 8-361 and 8-362.

8. ADVANCED COMMUNICATIONS NETWORKS

8.5 ATM SERVICE (T)

8.5.5 RATES AND CHARGES

C. 24 Months

4. Cell Transfer (Cont'd)

	USOC	MONTHLY RATE
• Variable Bit Rate - real time, (VBR-rt), per 64 kbps [1] Increment of total bandwidth		
- 45 Mbps port	CTNL2	$ 2.45
- 155 Mbps port	CTNL2	2.45
- 622 Mbps port	CTNL2	2.45
• Variable Bit Rate - real time, (VBR-rt), per 1 Mbps [1] Increment of total bandwidth		
- 45 Mbps port	CTNM2	34.43
- 155 Mbps port	CTNM2	34.43
- 622 Mbps port	CTNM2	34.43

(N)

[1] 64 kbps PVC increments are only available up to 1.536 Mbps. (N)

Certain material previously found on this page can now be found on Page 8-408.

8. ADVANCED COMMUNICATIONS NETWORKS

8.5 ATM SERVICE (T)
8.5.5 RATES AND CHARGES
C. 24 Months
4. Cell Transfer (Cont'd)

	USOC	MONTHLY RATE
• Variable Bit Rate - non-real time, (VBR-nrt), per 64 kbps [1] Increment of total bandwidth		
- 1.544 Mbps port	CTNR2	$ 2.16
- IMA Port, per port: 3, 4.6, 6.1, 7.7,9.2, 10.7, or 12.3 Mbps	CTNR2	2.16
- 45 Mbps port	CTNR2	2.16
- 155 Mbps port	CTNR2	2.16
- 622 Mbps port	CTNR2	2.16
• Variable Bit Rate - non-real time, (VBR-nrt), per 1 Mbps Increment of total bandwidth		
- 1.544 Mbps port	CTNV2	30.38
- IMA Port, per port: 3, 4.6, 6.1, 7.7,9.2, 10.7, or 12.3 Mbps	CTNV2	30.38
- 45 Mbps port	CTNV2	30.38
- 155 Mbps port	CTNV2	30.38
- 622 Mbps port	CTNV2	30.38

(N)

[1] 64 kbps PVC increments are only available up to 1.536 Mbps. (N)

Certain material previously found on this page can now be found on Page 8-409.

8. ADVANCED COMMUNICATIONS NETWORKS

8.5 ATM SERVICE
8.5.5 RATES AND CHARGES

C. 24 Months

4. Cell Transfer (Cont'd)

	USOC	MONTHLY RATE	
• Cell Bursting for VBR-rt and VBR-nrt			
- 100 Cells	AS3M1	-	
- 200 Cells	CTS22	$18.00	(M)
• Available Bit Rate, (ABR), per 64 kbps[1] Increment of total bandwidth			
- 45 Mbps port	CTNO2	1.44	
- 155 Mbps port	CTNO2	1.44	
- 622 Mbps port	CTNO2	1.44	
• Available Bit Rate, (ABR), per 1 Mbps Increment of total bandwidth			
- 45 Mbps port	CTNP2	20.25	
- 155 Mbps port	CTNP2	20.25	
- 622 Mbps port	CTNP2	20.25	

[1] 64 kbps PVC increments are only available up to 1.536 Mbps.

Certain material previously found on this page can now be found on Page 8-362.

8. ADVANCED COMMUNICATIONS NETWORKS

8.5 ATM SERVICE
8.5.5 RATES AND CHARGES

C. 24 Months

4. Cell Transfer (Cont'd)

	USOC	MONTHLY RATE	
• Unspecified Bit Rate, per 64 kbps[1] Increment of total bandwidth			
- 1.544 Mbps port	CTUE2	$1.01	
- Vintage			(T)
6/30/98 through 11/15/01		0.75	(T)
- IMA Port, per port: 3, 4.6, 6.1, 7.7,9.2, 10.7, or 12.3 Mbps	CTUE2	1.01	
- 45 Mbps port	CTUE2	1.01	
- Vintage			(T)
6/30/98 through 11/15/01		0.75	(T)
- 155 Mbps port	CTUE2	1.01	
- Vintage			(T)
6/30/98 through 11/15/01		0.75	(T)
- 622 Mbps port	CTUE2	1.01	

[1] 64 kbps PVC increments are only available up to 1.536 Mbps.

8. ADVANCED COMMUNICATIONS NETWORKS

8.5 ATM SERVICE
8.5.5 RATES AND CHARGES

C. 24 Months

4. Cell Transfer (Cont'd)

	USOC	MONTHLY RATE	
• Unspecified Bit Rate, per 1 Mbps Increment of total bandwidth			
- 1.544 Mbps port	CTUC2	$14.18	
- Vintage			(T)
6/30/98 through 11/15/01		11.25	(T)
- IMA Port, per port: 3, 4.6, 6.1, 7.7,9.2, 10.7, or 12.3 Mbps	CTUC2	14.18	
- 45 Mbps port	CTUC2	14.18	
- Vintage			(T)
6/30/98 through 11/15/01		11.25	(T)
- 155 Mbps port	CTUC2	14.18	
- Vintage			(T)
6/30/98 through 11/15/01		11.25	(T)
- 622 Mbps port	CTUC2	14.18	

8. ADVANCED COMMUNICATIONS NETWORKS

8.5 ATM SERVICE (T)

8.5.5 RATES AND CHARGES

C. 24 Months

	USOC	NONRECURRING CHARGE	MONTHLY RATE	
5. Central Office Connecting Channel (COCC), per COCC				(T)
- Up to 1.544 Mbps (Includes IMA)	CFN22	$25.00	$ 0.90	(N)
- Up to 45, 155 or 622 Mbps	CFN22	25.00	13.50	(N)

Certain material previously found on this page can now be found on Page 8-412.

8. ADVANCED COMMUNICATIONS NETWORKS

8.5 ATM SERVICE
8.5.5 RATES AND CHARGES (Cont'd)

D. 36 Months

	USOC	NONRECURRING CHARGE	MONTHLY RATE
1. ATM Access Links			
• DS1 Access Link, per Access Link			
- 1.544 Mbps	N7A13	$ 500.00	$117.30
• IMA Access Link, per Access Link			
- 3 Mbps	N7A13	1,000.00	234.60
- 4.6 Mbps	N7A13	1,500.00	351.90
- 6.1 Mbps	N7A13	2,000.00	469.20
- 7.7 Mbps	N7A13	2,500.00	586.50
- 9.2 Mbps	N7A13	3,000.00	703.80
- 10.7 Mbps	N7A13	3,500.00	821.10
- 12.3 Mbps	N7A13	4,000.00	938.40

(N)

	USOC	NONRECURRING CHARGE
• Per Subsequent Order for IMA Access Link, per 1.544 Mbps, DS1	NHCBL	$500.00

(N)

8. ADVANCED COMMUNICATIONS NETWORKS

8.5 ATM SERVICE
8.5.5 RATES AND CHARGES

D. 36 Months (Cont'd)

	USOC	NONRECURRING CHARGE	MONTHLY RATE	
• Optical Access Link, per Access Link				
- 45 Mbps	N7AX3	$1,000.00	$ 776.90	
- Vintage				(T)
10/02/95 through 11/15/01			656.75	(T)
- 155 Mbps	N7AX3	1,000.00	1,165.35	
- Vintage				(T)
10/02/95 through 11/15/01			980.50	(T)
- 622 Mbps	N7AX3	1,000.00	2,680.05	
- 45 Mbps optioned with protection	N7AR3	1,500.00	1,402.50	
- Vintage				(T)
3/15/97 through 11/15/01			1,110.00	(T)
- 155 Mbps optioned with protection	N7AR3	1,500.00	2,978.40	
- Vintage				(T)
3/15/97 through 11/15/01			2,590.00	(T)
• Stand-Alone Optical Access Link, per Access Link				
- 45 Mbps	N1AX3	1,000.00	776.90	
- Vintage				(T)
10/02/95 through 11/15/01			656.75	(T)
- 155 Mbps	N1AX3	1,000.00	1,165.35	
- Vintage				(T)
10/02/95 through 11/15/01			980.50	(T)
- 45 Mbps optioned with protection	N1AR3	1,500.00	1,402.50	
- Vintage				(T)
3/15/97 through 11/15/01			1,110.00	(T)
- 155 Mbps optioned with protection	N1AR3	1,500.00	2,978.40	
- Vintage				(T)
3/15/97 through 11/15/01			2,590.00	(T)

8. ADVANCED COMMUNICATIONS NETWORKS

8.5 ATM SERVICE
8.5.5 RATES AND CHARGES

D. 36 Months (Cont'd)

	USOC	NONRECURRING CHARGE	MONTHLY RATE	
2. ATM Ports, per port				
• 1.544 Mbps	C3TX3	$200.00	$ 204.00	
- Vintage				(T)
7/15/97 through 11/15/01			259.00	(T)
• 45 Mbps	C3TX3	200.00	510.00	
- Vintage				(T)
10/02/95 through 11/15/01			407.00	(T)
• 155 Mbps	C3TX3	200.00	926.50	
- Vintage				(T)
3/15/97 through 11/15/01			740.00	(T)
• 622 Mbps	C3TX3	200.00	2,125.00	

8. ADVANCED COMMUNICATIONS NETWORKS

8.5 ATM SERVICE
8.5.5 RATES AND CHARGES

D. 36 Months (Cont'd)

	USOC	NONRECURRING CHARGE	MONTHLY RATE
3. IMA Ports, per port			
• 3 Mbps	UUTA3	$ 400.00	$ 408.00
• 4.6 Mbps	UUTB3	600.00	612.00
• 6.1 Mbps	UUTC3	800.00	816.00
• 7.7 Mbps	UUTD3	1,000.00	1,020.00
• 9.2 Mbps	UUTE3	1,200.00	1,224.00
• 10.7 Mbps	UUTF3	1,400.00	1,428.00
• 12.3 Mbps	UUTG3	1,600.00	1,632.00

	USOC	NONRECURRING CHARGE	
• Per Subsequent Order for IMA Ports, per 1.544 Mbps, DS1	NHCBM	$200.00	(N) (N)
4. Cell Transfer			
• Per VCC	NHCNA	100.00	
• Per VPC	NHCNB	100.00	
• Per Subsequent Order for VCC or VPC	NR9AZ	160.00	(M) (M)

Certain material found on this page formerly appeared on Page 8-377.

8. ADVANCED COMMUNICATIONS NETWORKS

8.5 ATM SERVICE (T)
8.5.5 RATES AND CHARGES
D. 36 Months
4. Cell Transfer (Cont'd)

	USOC	MONTHLY RATE
• Constant Bit Rate (CBR), per 64 kbps [1] Increment of total bandwidth		
- 1.544 Mbps port	CTNS3	$2.72
- IMA Port, per port: 3, 4.6, 6.1, 7.7,9.2, 10.7, or 12.3 Mbps	CTNS3	2.72
- 45 Mbps port	CTNS3	2.72
- 155 Mbps port	CTNS3	2.72
- 622 Mbps port	CTNS3	2.72
• Constant Bit Rate (CBR), per 75 kbps [1] Increment of total bandwidth		
- 1.544 Mbps port	CTNW3	3.16
- IMA Port, per port: 3, 4.6, 6.1, 7.7,9.2, 10.7, or 12.3 Mbps	CTNW3	3.16
- 45 Mbps port	CTNW3	3.16
- 155 Mbps port	CTNW3	3.16
- 622 Mbps port	CTNW3	3.16

(N)

[1] 64 kbps and 75 kbps PVC increments are only available up to 1.536 Mbps. (N)

Certain material previously found on this page can now be found on Page 8-371.

8. ADVANCED COMMUNICATIONS NETWORKS

8.5 ATM SERVICE (T)
8.5.5 RATES AND CHARGES
D. 36 Months
4. Cell Transfer (Cont'd)

	USOC	MONTHLY RATE	
• Constant Bit Rate (CBR), per 1 Mbps Increment of total bandwidth			(N)
- 1.544 Mbps port	CTNU3	$38.25	
- IMA Port, per port: 3, 4.6, 6.1, 7.7,9.2, 10.7, or 12.3 Mbps	CTNU3	38.25	
- 45 Mbps port	CTNU3	38.25	
- 155 Mbps port	CTNU3	38.25	
- 622 Mbps port	CTNU3	38.25	
• Constant Bit Rate (CBR), per 1.787 Mbps Total bandwidth			
- IMA Port, per port: 3, 4.6, 6.1, 7.7,9.2, 10.7, or 12.3 Mbps	CTNY3	68.35	
- 45 Mbps port	CTNY3	68.35	
- 155 Mbps port	CTNY3	68.35	
- 622 Mbps port	CTNY3	68.35	(N)

Certain material previously found on this page can now be found on Page 8-371.

8. ADVANCED COMMUNICATIONS NETWORKS

8.5 ATM SERVICE (T)

8.5.5 RATES AND CHARGES

D. 36 Months

4. Cell Transfer (Cont'd)

	USOC	MONTHLY RATE
• Variable Bit Rate - real time, (VBR-rt), per 64 kbps [1] Increment of total bandwidth		
- 45 Mbps port	CTNL3	$ 2.31
- 155 Mbps port	CTNL3	2.31
- 622 Mbps port	CTNL3	2.31
• Variable Bit Rate - real time, (VBR-rt), per 1 Mbps Increment of total bandwidth		
- 45 Mbps port	CTNM3	32.51
- 155 Mbps port	CTNM3	32.51
- 622 Mbps port	CTNM3	32.51

(N)

[1] 64 kbps PVC increments are only available up to 1.536 Mbps. (N)

Certain material previously found on this page can now be found on Page 8-372.

8. ADVANCED COMMUNICATIONS NETWORKS

8.5 ATM SERVICE (T)

8.5.5 RATES AND CHARGES

D. 36 Months

4. Cell Transfer (Cont'd)

	USOC	MONTHLY RATE
• Variable Bit Rate - non-real time, (VBR-nrt), per 64 kbps [1] Increment of total bandwidth		
- 1.544 Mbps port	CTNR3	$ 2.04
- IMA Port, per port: 3, 4.6, 6.1, 7.7,9.2, 10.7, or 12.3 Mbps	CTNR3	2.04
- 45 Mbps port	CTNR3	2.04
- 155 Mbps port	CTNR3	2.04
- 622 Mbps port	CTNR3	2.04
• Variable Bit Rate - non-real time, (VBR-nrt), per 1 Mbps Increment of total bandwidth		
- 1.544 Mbps port	CTNV3	28.69
- IMA Port, per port: 3, 4.6, 6.1, 7.7,9.2, 10.7, or 12.3 Mbps	CTNV3	28.69
- 45 Mbps port	CTNV3	28.69
- 155 Mbps port	CTNV3	28.69
- 622 Mbps port	CTNV3	28.69

(N)

[1] 64 kbps PVC increments are only available up to 1.536 Mbps. (N)

Certain material previously found on this page can now be found on Page 8-371.

8. ADVANCED COMMUNICATIONS NETWORKS

8.5 ATM SERVICE
8.5.5 RATES AND CHARGES

D. 36 Months

4. Cell Transfer (Cont'd)

	USOC	MONTHLY RATE	
• Cell Bursting for VBR-rt and VBR-nrt			
- 100 Cells	AS3M1	-	
- 200 Cells	CTS23	$17.00	(M)
• Available Bit Rate, (ABR), per 64 kbps[1] Increment of total bandwidth			
- 45 Mbps port	CTNO3	1.36	
- 155 Mbps port	CTNO3	1.36	
- 622 Mbps port	CTNO3	1.36	
• Available Bit Rate, (ABR), per 1 Mbps Increment of total bandwidth			
- 45 Mbps port	CTNP3	19.13	
- 155 Mbps port	CTNP3	19.13	
- 622 Mbps port	CTNP3	19.13	

[1] 64 kbps PVC increments are only available up to 1.536 Mbps.

Certain material previously found on this page can now be found on Page 8-372.

8. ADVANCED COMMUNICATIONS NETWORKS

8.5 ATM SERVICE
8.5.5 RATES AND CHARGES

D. 36 Months

4. Cell Transfer (Cont'd)

	USOC	MONTHLY RATE	
• Unspecified Bit Rate, per 64 kbps [1] Increment of total bandwidth			
- 1.544 Mbps port	CTUE3	$0.95	
- Vintage			(T)
6/30/98 through 11/15/01		0.74	(T)
- IMA Port, per port: 3, 4.6, 6.1, 7.7,9.2, 10.7, or 12.3 Mbps	CTUE3	0.95	
- 45 Mbps port	CTUE3	0.95	
- Vintage			(T)
6/30/98 through 11/15/01		0.74	(T)
- 155 Mbps port	CTUE3	0.95	
- Vintage			(T)
6/30/98 through 11/15/01		0.74	(T)
- 622 Mbps port	CTUE3	0.95	

[1] 64 kbps PVC increments are only available up to 1.536 Mbps.

8. ADVANCED COMMUNICATIONS NETWORKS

8.5 ATM SERVICE
8.5.5 RATES AND CHARGES

D. 36 Months

4. Cell Transfer (Cont'd)

	USOC	MONTHLY RATE	
• Unspecified Bit Rate, per 1 Mbps Increment of total bandwidth			
- 1.544 Mbps port	CTUC3	$13.39	
- Vintage			(T)
6/30/98 through 11/15/01		11.10	(T)
- IMA Port, per port: 3, 4.6, 6.1, 7.7,9.2, 10.7, or 12.3 Mbps	CTUC3	13.39	
- 45 Mbps port	CTUC3	13.39	
- Vintage			(T)
6/30/98 through 11/15/01		11.10	(T)
- 155 Mbps port	CTUC3	13.39	
- Vintage			(T)
3/15/97 through 11/15/01		11.10	(T)
- 622 Mbps port	CTUC3	13.39	

8. ADVANCED COMMUNICATIONS NETWORKS

8.5 ATM SERVICE (T)

8.5.5 RATES AND CHARGES

D. 36 Months

	USOC	NONRECURRING CHARGE	MONTHLY RATE	
5. Central Office Connecting Channel (COCC), per COCC				(T)
- Up to 1.544 Mbps (Includes IMA)	CFN23	$25.00	$ 0.85	(N)
- Up to 45, 155 or 622 Mbps	CFN23	25.00	12.75	(N)

Certain material previously found on this page can now be found on Page 8-418.

8. ADVANCED COMMUNICATIONS NETWORKS

8.5 ATM SERVICE
8.5.5 RATES AND CHARGES (Cont'd)

E. 48 Months

	USOC	NONRECURRING CHARGE	MONTHLY RATE
1. ATM Access Links			
• DS1 Access Link, per Access Link			
- 1.544 Mbps	N7A14	$ 500.00	$114.54
• IMA Access Link, per Access Link			
- 3 Mbps	N7A14	1,000.00	229.08
- 4.6 Mbps	N7A14	1,500.00	343.62
- 6.1 Mbps	N7A14	2,000.00	458.16
- 7.7 Mbps	N7A14	2,500.00	572.70
- 9.2 Mbps	N7A14	3,000.00	687.24
- 10.7 Mbps	N7A14	3,500.00	801.78
- 12.3 Mbps	N7A14	4,000.00	916.32

	USOC	NONRECURRING CHARGE	
• Per Subsequent Order for IMA Access Link, per 1.544 Mbps, DS1	NHCBL	$500.00	(N)

(N)

8. ADVANCED COMMUNICATIONS NETWORKS

8.5 ATM SERVICE
8.5.5 RATES AND CHARGES

E. 48 Months (Cont'd)

	USOC	NONRECURRING CHARGE	MONTHLY RATE	
• Optical Access Link, per Access Link				
- 45 Mbps	N7AX4	$1,000.00	$ 758.62	
- Vintage				(T)
10/02/95 through 11/15/01			647.88	(T)
- 155 Mbps	N7AX4	1,000.00	1,137.93	
- Vintage				(T)
10/02/95 through 11/15/01			967.25	(T)
- 622 Mbps	N7AX4	1,000.00	2,616.99	
- 45 Mbps optioned with protection	N7AR4	1,500.00	1,369.50	
- Vintage				(T)
3/15/97 through 11/15/01			1,095.00	(T)
- 155 Mbps optioned with protection	N7AR4	1,500.00	2,908.32	
- Vintage				(T)
3/15/97 through 11/15/01			2,555.00	(T)
• Stand-Alone Optical Access Link, per Access Link				
- 45 Mbps	N1AX4	1,000.00	758.62	
- Vintage				(T)
10/02/95 through 11/15/01			647.88	(T)
- 155 Mbps	N1AX4	1,000.00	1,137.93	
- Vintage				(T)
10/02/95 through 11/15/01			967.25	(T)
- 45 Mbps optioned with protection	N1AR4	1,500.00	1,369.50	
- Vintage				(T)
3/15/97 through 11/15/01			1,095.00	(T)
- 155 Mbps optioned with protection	N1AR4	1,500.00	2,908.32	
- Vintage				(T)
3/15/97 through 11/15/01			2,555.00	(T)

8. ADVANCED COMMUNICATIONS NETWORKS

8.5 ATM SERVICE
8.5.5 RATES AND CHARGES

E. 48 Months (Cont'd)

	USOC	NONRECURRING CHARGE	MONTHLY RATE	
2. ATM Ports, per port				
• 1.544 Mbps	C3TX4	$200.00	$ 199.20	
- Vintage				(T)
7/15/97 through 11/15/01			255.50	(T)
• 45 Mbps	C3TX4	200.00	498.00	
- Vintage				(T)
10/02/95 through 11/15/01			401.50	(T)
• 155 Mbps	C3TX4	200.00	904.70	
- Vintage				(T)
10/02/95 through 11/15/01			730.00	(T)
• 622 Mbps	C3TX4	200.00	2,075.00	

8. ADVANCED COMMUNICATIONS NETWORKS

8.5 ATM SERVICE
8.5.5 RATES AND CHARGES

E. 48 Months (Cont'd)

	USOC	NONRECURRING CHARGE	MONTHLY RATE
3. IMA Ports, per port			
• 3 Mbps	UUTA4	$ 400.00	$ 398.40
• 4.6 Mbps	UUTB4	600.00	597.60
• 6.1 Mbps	UUTC4	800.00	796.80
• 7.7 Mbps	UUTD4	1,000.00	996.00
• 9.2 Mbps	UUTE4	1,200.00	1,195.20
• 10.7 Mbps	UUTF4	1,400.00	1,394.40
• 12.3 Mbps	UUTG4	1,600.00	1,593.60

	USOC	NONRECURRING CHARGE	
• Per Subsequent Order for IMA Ports, per 1.544 Mbps, DS1	NHCBM	$200.00	(N) (N)
4. Cell Transfer			
• Per VCC	NHCNA	100.00	
• Per VPC	NHCNB	100.00	
• Per Subsequent Order for VCC or VPC	NR9AZ	160.00	(M) (M)

Certain material found on this page formerly appeared on Page 8-387.

8. ADVANCED COMMUNICATIONS NETWORKS

8.5 ATM SERVICE (T)
8.5.5 RATES AND CHARGES
E. 48 Months
4. Cell Transfer (Cont'd)

	USOC	MONTHLY RATE
• Constant Bit Rate (CBR), per 64 kbps [1] Increment of total bandwidth		
- 1.544 Mbps port	CTNS4	$2.66
- IMA Port, per port: 3, 4.6, 6.1, 7.7,9.2, 10.7, or 12.3 Mbps	CTNS4	2.66
- 45 Mbps port	CTNS4	2.66
- 155 Mbps port	CTNS4	2.66
- 622 Mbps port	CTNS4	2.66
• Constant Bit Rate (CBR), per 75 kbps [1] Increment of total bandwidth		
- 1.544 Mbps port	CTNW4	3.08
- IMA Port, per port: 3, 4.6, 6.1, 7.7,9.2, 10.7, or 12.3 Mbps	CTNW4	3.08
- 45 Mbps port	CTNW4	3.08
- 155 Mbps port	CTNW4	3.08
- 622 Mbps port	CTNW4	3.08

(N)

[1] 64 kbps and 75 kbps PVC increments are only available up to 1.536 Mbps. (N)

Certain material previously found on this page can now be found on Page 8-378.

8. ADVANCED COMMUNICATIONS NETWORKS

8.5 ATM SERVICE (T)
8.5.5 RATES AND CHARGES
E. 48 Months
4. Cell Transfer (Cont'd)

	USOC	MONTHLY RATE	
• Constant Bit Rate (CBR), per 1 Mbps Increment of total bandwidth			(N)
- 1.544 Mbps port	CTNU4	$37.35	
- IMA Port, per port: 3, 4.6, 6.1, 7.7,9.2, 10.7, or 12.3 Mbps	CTNU4	37.35	
- 45 Mbps port	CTNU4	37.35	
- 155 Mbps port	CTNU4	37.35	
- 622 Mbps port	CTNU4	37.35	
• Constant Bit Rate (CBR), per 1.787 Mbps Total bandwidth			
- IMA Port, per port: 3, 4.6, 6.1, 7.7,9.2, 10.7, or 12.3 Mbps	CTNY4	66.74	
- 45 Mbps port	CTNY4	66.74	
- 155 Mbps port	CTNY4	66.74	
- 622 Mbps port	CTNY4	66.74	(N)

Certain material previously found on this page can now be found on Page 8-421.

8. ADVANCED COMMUNICATIONS NETWORKS

8.5 ATM SERVICE (T)

8.5.5 RATES AND CHARGES

E. 48 Months

4. Cell Transfer (Cont'd)

	USOC	MONTHLY RATE
• Variable Bit Rate - real time, (VBR-rt), per 64 kbps [1] Increment of total bandwidth		
- 45 Mbps port	CTNL4	$ 2.26
- 155 Mbps port	CTNL4	2.26
- 622 Mbps port	CTNL4	2.26
• Variable Bit Rate - real time, (VBR-rt), per 1 Mbps Increment of total bandwidth		
- 45 Mbps port	CTNM4	31.75
- 155 Mbps port	CTNM4	31.75
- 622 Mbps port	CTNM4	31.75

(N)

[1] 64 kbps PVC increments are only available up to 1.536 Mbps. (N)

Certain material previously found on this page can now be found on Page 8-381.

8. ADVANCED COMMUNICATIONS NETWORKS

8.5 ATM SERVICE (T)
8.5.5 RATES AND CHARGES
E. 48 Months
4. Cell Transfer (Cont'd)

	USOC	MONTHLY RATE
• Variable Bit Rate - non-real time, (VBR-nrt), per 64 kbps [1] Increment of total bandwidth		
- 1.544 Mbps port	CTNR4	$ 1.99
- IMA Port, per port: 3, 4.6, 6.1, 7.7,9.2, 10.7, or 12.3 Mbps	CTNR4	1.99
- 45 Mbps port	CTNR4	1.99
- 155 Mbps port	CTNR4	1.99
- 622 Mbps port	CTNR4	1.99
• Variable Bit Rate - non-real time, (VBR-nrt), per 1 Mbps Increment of total bandwidth		
- 1.544 Mbps port	CTNV4	28.01
- IMA Port, per port: 3, 4.6, 6.1, 7.7,9.2, 10.7, or 12.3 Mbps	CTNV4	28.01
- 45 Mbps port	CTNV4	28.01
- 155 Mbps port	CTNV4	28.01
- 622 Mbps port	CTNV4	28.01

(N)

[1] 64 kbps PVC increments are only available up to 1.536 Mbps. (N)

Certain material previously found on this page can now be found on Page 8-381.

8. ADVANCED COMMUNICATIONS NETWORKS

8.5 ATM SERVICE
8.5.5 RATES AND CHARGES

E. 48 Months

4. Cell Transfer (Cont'd)

	USOC	MONTHLY RATE	
• Cell Bursting for VBR-rt and VBR-nrt			
- 100 Cells	AS3M1	-	
- 200 Cells	CTS24	$16.60	(M)
• Available Bit Rate Service, (ABR), per 64 kbps[1] Increment of total bandwidth			
- 45 Mbps port	CTNO4	1.33	
- 155 Mbps port	CTNO4	1.33	
- 622 Mbps port	CTNO4	1.33	
• Available Bit Rate Service, (ABR), per 1 Mbps Increment of total bandwidth			
- 45 Mbps port	CTNP4	18.68	
- 155 Mbps port	CTNP4	18.68	
- 622 Mbps port	CTNP4	18.68	

[1] 64 kbps PVC increments are only available up to 1.536 Mbps.

Certain material previously found on this page can now be found on Page 8-382.

8. ADVANCED COMMUNICATIONS NETWORKS

8.5 ATM SERVICE
8.5.5 RATES AND CHARGES

E. 48 Months

4. Cell Transfer (Cont'd)

	USOC	MONTHLY RATE	
• Unspecified Bit Rate, per 64 kbps[1] Increment of total bandwidth			
- 1.544 Mbps port	CTUE4	$0.93	
- Vintage			(T)
6/30/98 through 11/15/01		0.73	(T)
- IMA Port, per port: 3, 4.6, 6.1, 7.7,9.2, 10.7, or 12.3 Mbps	CTUE4	0.93	
- 45 Mbps port	CTUE4	0.93	
- Vintage			(T)
6/30/98 through 11/15/01		0.73	(T)
- 155 Mbps port	CTUE4	0.93	
- Vintage			(T)
6/30/98 through 11/15/01		0.73	(T)
- 622 Mbps port	CTUE4	0.93	

[1] 64 kbps PVC increments are only available up to 1.536 Mbps.

8. ADVANCED COMMUNICATIONS NETWORKS

8.5 ATM SERVICE
8.5.5 RATES AND CHARGES

E. 48 Months

4. Cell Transfer (Cont'd)

	USOC	MONTHLY RATE	
• Unspecified Bit Rate, per 1 Mbps Increment of total bandwidth			
- 1.544 Mbps port	CTUC4	$13.07	
- Vintage			(T)
6/30/98 through 11/15/01		10.95	(T)
- IMA Port, per port: 3, 4.6, 6.1, 7.7,9.2, 10.7, or 12.3 Mbps	CTUC4	13.07	
- 45 Mbps port	CTUC4	13.07	
- Vintage			(T)
6/30/98 through 11/15/01		10.95	(T)
- 155 Mbps port	CTUC4	13.07	
- Vintage			(T)
6/30/98 through 11/15/01		10.95	(T)
- 622 Mbps port	CTUC4	13.07	

8. ADVANCED COMMUNICATIONS NETWORKS

8.5 ATM SERVICE (T)

8.5.5 RATES AND CHARGES

E. 48 Months

	USOC	NONRECURRING CHARGE	MONTHLY RATE	
5. Central Office Connecting Channel (COCC), per COCC				(T)
- Up to 1.544 Mbps (Includes IMA)	CFN24	$25.00	$ 0.83	(N)
- Up to 45, 155 or 622 Mbps	CFN24	25.00	12.45	(N)

Certain material previously found on this page can now be found on Page 8-424.

8. ADVANCED COMMUNICATIONS NETWORKS

8.5 ATM SERVICE
8.5.5 RATES AND CHARGES (Cont'd)

F. 60 Months

	USOC	NONRECURRING CHARGE	MONTHLY RATE
1. ATM Access Links			
• DS1 Access Link, per Access Link			
- 1.544 Mbps	N7A15	$ 500.00	$110.40
• IMA Access Link, per Access Link			
- 3 Mbps	N7A15	1,000.00	220.80
- 4.6 Mbps	N7A15	1,500.00	331.20
- 6.1 Mbps	N7A15	2,000.00	441.60
- 7.7 Mbps	N7A15	2,500.00	552.00
- 9.2 Mbps	N7A15	3,000.00	662.40
- 10.7 Mbps	N7A15	3,500.00	772.80
- 12.3 Mbps	N7A15	4,000.00	883.20

	USOC	NONRECURRING CHARGE	
• Per Subsequent Order for IMA Access Link, per 1.544 Mbps, DS1	NHCBL	$500.00	(N)

(N)

8. ADVANCED COMMUNICATIONS NETWORKS

8.5 ATM SERVICE
8.5.5 RATES AND CHARGES

F. 60 Months (Cont'd)

	USOC	NONRECURRING CHARGE	MONTHLY RATE	
• Optical Access Link, per Access Link				
- 45 Mbps	N7AX5	$1,000.00	$ 731.20	
- Vintage				(T)
10/02/95 through 11/15/01			639.00	(T)
- 155 Mbps	N7AX5	1,000.00	1,096.80	
- Vintage				(T)
10/02/95 through 11/15/01			954.00	(T)
- 622 Mbps	N7AX5	1,000.00	2,522.40	
- 45 Mbps with protection	N7AR5	1,500.00	1,320.00	
- Vintage				(T)
3/15/97 through 11/15/01			1,080.00	(T)
- 155 Mbps with protection	N7AR5	1,500.00	2,803.20	
- Vintage				(T)
3/15/97 through 11/15/01			2,520.00	(T)
• Stand-Alone Optical Access Link, per Access Link				
- 45 Mbps	N1AX5	1,000.00	731.20	
- Vintage				(T)
10/02/95 through 11/15/01			639.00	(T)
- 155 Mbps	N1AX5	1,000.00	1,096.80	
- Vintage				(T)
10/02/95 through 11/15/01			954.00	(T)
- 45 Mbps with protection	N1AR5	1,500.00	1,320.00	
- Vintage				(T)
3/15/97 through 11/15/01			1,080.00	(T)
- 155 Mbps with protection	N1AR5	1,500.00	2,803.20	
- Vintage				(T)
3/15/97 through 11/15/01			2,520.00	(T)

8. ADVANCED COMMUNICATIONS NETWORKS

8.5 ATM SERVICE
8.5.5 RATES AND CHARGES

F. 60 Months (Cont'd)

	USOC	NONRECURRING CHARGE	MONTHLY RATE	
2. ATM Ports, per port				
• 1.544 Mbps	C3TX5	$200.00	$ 192.00	
- Vintage				(T)
7/15/97 through 11/15/01			252.00	(T)
• 45 Mbps	C3TX5	200.00	480.00	
- Vintage				(T)
10/02/95 through 11/15/01			396.00	(T)
• 155 Mbps	C3TX5	200.00	872.00	
- Vintage				(T)
3/15/97 through 11/15/01			720.00	(T)
• 622 Mbps	C3TX5	200.00	2,000.00	

8. ADVANCED COMMUNICATIONS NETWORKS

8.5 ATM SERVICE
8.5.5 RATES AND CHARGES

F. 60 Months (Cont'd)

	USOC	NONRECURRING CHARGE	MONTHLY RATE
3. IMA Ports, per port			
• 3 Mbps	UUTA5	$ 400.00	$ 384.00
• 4.6 Mbps	UUTB5	600.00	576.00
• 6.1 Mbps	UUTC5	800.00	768.00
• 7.7 Mbps	UUTD5	1,000.00	960.00
• 9.2 Mbps	UUTE5	1,200.00	1,152.00
• 10.7 Mbps	UUTF5	1,400.00	1,344.00
• 12.3 Mbps	UUTG5	1,600.00	1,536.00

	USOC	NONRECURRING CHARGE	
• Per Subsequent Order for IMA Ports, per 1.544 Mbps, DS1	NHCBM	$200.00	(N) (N)
4. Cell Transfer			
• Per VCC	NHCNA	100.00	
• Per VPC	NHCNB	100.00	
• Per Subsequent Order for VCC or VPC	NR9AZ	160.00	(M) (M)

Certain material found on this page formerly appeared on Page 8-397.

8. ADVANCED COMMUNICATIONS NETWORKS

8.5 ATM SERVICE (T)
8.5.5 RATES AND CHARGES
F. 60 Months
4. Cell Transfer (Cont'd)

	USOC	MONTHLY RATE
• Constant Bit Rate (CBR), per 64 kbps [1] Increment of total bandwidth		
- 1.544 Mbps port	CTNS5	$2.56
- IMA Port, per port: 3, 4.6, 6.1, 7.7,9.2, 10.7, or 12.3 Mbps	CTNS5	2.56
- 45 Mbps port	CTNS5	2.56
- 155 Mbps port	CTNS5	2.56
- 622 Mbps port	CTNS5	2.56
• Constant Bit Rate (CBR), per 75 kbps [1] Increment of total bandwidth		
- 1.544 Mbps port	CTNW5	2.97
- IMA Port, per port: 3, 4.6, 6.1, 7.7,9.2, 10.7, or 12.3 Mbps	CTNW5	2.97
- 45 Mbps port	CTNW5	2.97
- 155 Mbps port	CTNW5	2.97
- 622 Mbps port	CTNW5	2.97

(N)

[1] 64 kbps and 75 kbps PVC increments are only available up to 1.536 Mbps. (N)

Certain material previously found on this page can now be found on Page 8-428.

8. ADVANCED COMMUNICATIONS NETWORKS

8.5 ATM SERVICE (T)

8.5.5 RATES AND CHARGES

F. 60 Months

4. Cell Transfer (Cont'd)

	USOC	MONTHLY RATE	
• Constant Bit Rate (CBR), per 1 Mbps Increment of total bandwidth			(N)
- 1.544 Mbps port	CTNU5	$36.00	
- IMA Port, per port: 3, 4.6, 6.1, 7.7,9.2, 10.7, or 12.3 Mbps	CTNU5	36.00	
- 45 Mbps port	CTNU5	36.00	
- 155 Mbps port	CTNU5	36.00	
- 622 Mbps port	CTNU5	36.00	
• Constant Bit Rate (CBR), per 1.787 Mbps Total bandwidth			
- IMA Port, per port: 3, 4.6, 6.1, 7.7,9.2, 10.7, or 12.3 Mbps	CTNY5	64.33	
- 45 Mbps port	CTNY5	64.33	
- 155 Mbps port	CTNY5	64.33	
- 622 Mbps port	CTNY5	64.33	(N)

Certain material previously found on this page can now be found on Page 8-388.

8. ADVANCED COMMUNICATIONS NETWORKS

8.5 ATM SERVICE (T)

8.5.5 RATES AND CHARGES

F. 60 Months

4. Cell Transfer (Cont'd)

	USOC	MONTHLY RATE
• Variable Bit Rate - real time, (VBR-rt), per 64 kbps [1] Increment of total bandwidth		
- 45 Mbps port	CTNL5	$ 2.18
- 155 Mbps port	CTNL5	2.18
- 622 Mbps port	CTNL5	2.18
• Variable Bit Rate - real time, (VBR-rt), per 1 Mbps Increment of total bandwidth		
- 45 Mbps port	CTNM5	30.60
- 155 Mbps port	CTNM5	30.60
- 622 Mbps port	CTNM5	30.60

(N)

[1] 64 kbps PVC increments are only available up to 1.536 Mbps. (N)

Certain material previously found on this page can now be found on Page 8-428.

8. ADVANCED COMMUNICATIONS NETWORKS

8.5 ATM SERVICE (T)

8.5.5 RATES AND CHARGES

F. 60 Months

4. Cell Transfer (Cont'd)

	USOC	MONTHLY RATE
• Variable Bit Rate - non-real time, (VBR-nrt), per 64 kbps [1] Increment of total bandwidth		
- 1.544 Mbps port	CTNR5	$ 1.92
- IMA Port, per port: 3, 4.6, 6.1, 7.7,9.2, 10.7, or 12.3 Mbps	CTNR5	1.92
- 45 Mbps port	CTNR5	1.92
- 155 Mbps port	CTNR5	1.92
- 622 Mbps port	CTNR5	1.92
• Variable Bit Rate - non-real time, (VBR-nrt), per 1 Mbps Increment of total bandwidth		
- 1.544 Mbps port	CTNV5	27.00
- IMA Port, per port: 3, 4.6, 6.1, 7.7,9.2, 10.7, or 12.3 Mbps	CTNV5	27.00
- 45 Mbps port	CTNV5	27.00
- 155 Mbps port	CTNV5	27.00
- 622 Mbps port	CTNV5	27.00

(N)

[1] 64 kbps PVC increments are only available up to 1.536 Mbps. (N)

Certain material previously found on this page can now be found on Page 8-391.

8. ADVANCED COMMUNICATIONS NETWORKS

8.5 ATM SERVICE
8.5.5 RATES AND CHARGES

F. 60 Months

4. Cell Transfer (Cont'd)

	USOC	MONTHLY RATE	
• Cell Bursting for VBR-rt and VBR-nrt			
- 100 Cells	AS3M1	-	
- 200 Cells	CTS25	$16.00	(M)
• Available Bit Rate Service, (ABR), per 64 kbps[1] Increment of total bandwidth			
- 45 Mbps port	CTNO5	1.28	
- 155 Mbps port	CTNO5	1.28	
- 622 Mbps port	CTNO5	1.28	
• Available Bit Rate Service, (ABR), per 1 Mbps Increment of total bandwidth			
- 45 Mbps port	CTNP5	18.00	
- 155 Mbps port	CTNP5	18.00	
- 622 Mbps port	CTNP5	18.00	

[1] 64 kbps PVC increments are only available up to 1.536 Mbps.

Certain material previously found on this page can now be found on Page 8-392.

8. ADVANCED COMMUNICATIONS NETWORKS

8.5 ATM SERVICE
8.5.5 RATES AND CHARGES

F. 60 Months

4. Cell Transfer (Cont'd)

	USOC	MONTHLY RATE	
• Unspecified Bit Rate, per 64 kbps[1] Increment of total bandwidth			
- 1.544 Mbps port	CTUE5	$0.90	
- Vintage			(T)
6/30/98 through 11/15/01		0.72	(T)
- IMA Port, per port: 3, 4.6, 6.1, 7.7,9.2, 10.7, or 12.3 Mbps	CTUE5	0.90	
- 45 Mbps port	CTUE5	0.90	
- Vintage			(T)
6/30/98 through 11/15/01		0.72	(T)
- 155 Mbps port	CTUE5	0.90	
- Vintage			(T)
6/30/98 through 11/15/01		0.72	(T)
- 622 Mbps port	CTUE5	0.90	

[1] 64 kbps PVC increments are only available up to 1.536 Mbps.

8. ADVANCED COMMUNICATIONS NETWORKS

8.5 ATM SERVICE
8.5.5 RATES AND CHARGES

F. 60 Months

4. Cell Transfer (Cont'd)

	USOC	MONTHLY RATE	
• Unspecified Bit Rate, per 1 Mbps Increment of total bandwidth			
- 1.544 Mbps port	CTUC5	$12.60	
- Vintage			(T)
6/30/98 through 11/15/01		10.80	(T)
- IMA Port, per port: 3, 4.6, 6.1, 7.7,9.2, 10.7, or 12.3 Mbps	CTUC5	12.60	
- 45 Mbps port	CTUC5	12.60	
- Vintage			(T)
6/30/98 through 11/15/01		10.80	(T)
- 155 Mbps port	CTUC5	12.60	
- Vintage			(T)
6/30/98 through 11/15/01		10.80	(T)
- 622 Mbps port	CTUC5	12.60	

8. ADVANCED COMMUNICATIONS NETWORKS

8.5 ATM SERVICE (T)

8.5.5 RATES AND CHARGES

F. 60 Months

	USOC	NONRECURRING CHARGE	MONTHLY RATE	
5. Central Office Connecting Channel (COCC), per COCC				(T)
- Up to 1.544 Mbps (Includes IMA)	CFN25	$25.00	$ 0.80	(N)
- Up to 45, 155 or 622 Mbps	CFN25	30.00	12.00	(N)

Certain material previously found on this page can now be found on Page 8-428.2.

8. ADVANCED COMMUNICATIONS NETWORKS

8.5 ATM SERVICE (T)

8.5.6 RATES AND CHARGES GRANDFATHERED (N)

Effective November 16, 2001, the Rates and Charges following are limited to existing service. All existing ATM Service customers with term plans as of November 15, 2001 may retain their service until the expiration of their term or until the service is moved or disconnected. (N)

A. 12 Months (M)

	USOC	NONRECURRING CHARGE
1. Cell Transfer		
• First VCC	NR9AV	$150.00
• Each additional VCC	NR9AW	50.00
• First VPC	NR9AX	150.00
• Each additional VPC	NR9AY	50.00
• Subsequent VCC(s) or VPC order charge, per order[1]	NR9AZ	160.00

	USOC	NONRECURRING CHARGE	MONTHLY RATE
• Fixed Rate, per Port			
- 1.544 Mbps	C3TX1	$161.45	$266.00
- 45 Mbps	C3TX1	161.45	418.00
- 155 Mbps	C3TX1	161.45	760.00

[1] In addition to the Subsequent VCC(s) or VPC order charge, the First and Each Additional VCC or VPC nonrecurring charges apply, as applicable. (M)

Certain material on this page formerly appeared on Page 8-353.

8. ADVANCED COMMUNICATIONS NETWORKS

8.5 ATM SERVICE (T)(M)

8.5.6 RATES AND CHARGES GRANDFATHERED

B. 12 Months

1. Cell Transfer (Cont'd)

	USOC	MONTHLY RATE
• Peak Cell Rate Service, per 64 kbps Increment of total bandwidth		
- 1.544 Mbps port	CTNB1	$1.90
- 45 Mbps port	CTNB1	1.90
- 155 Mbps port	CTNB1	1.90
• Peak Cell Rate Service, per 75 kbps Increment of total bandwidth		
- 1.544 Mbps port	CTNJ1	2.19
- 45 Mbps port	CTNJ1	2.19
- 155 Mbps port	CTNJ1	2.19

(M)

Certain material on this page formerly appeared on Page 8-354.

8. ADVANCED COMMUNICATIONS NETWORKS

8.5 ATM SERVICE (T)(M)

8.5.6 RATES AND CHARGES GRANDFATHERED

A. 12 Months

1. Cell Transfer (Cont'd)

	USOC	MONTHLY RATE
• Peak Cell Rate Service, per 1 Mbps Increment of total bandwidth		
- 1.544 Mbps port	CTNA1	$28.50
- 45 Mbps port	CTNA1	28.50
- 155 Mbps port	CTNA1	28.50
• Peak Cell Rate Service, per 1.544 Mbps Increment of total bandwidth		
- 45 Mbps port	CTND1	38.00
- 155 Mbps port	CTND1	38.00

(M)

Certain material on this page formerly appeared on Page 8-355.

8. ADVANCED COMMUNICATIONS NETWORKS

8.5 ATM SERVICE (T)(M)

8.5.6 RATES AND CHARGES GRANDFATHERED (CONT'D)

A. 12 Months

1. Cell Transfer (Cont'd)

	USOC	MONTHLY RATE
• Peak Cell Rate Service, per 1.787 Mbps Increment of total bandwidth		
- 45 Mbps port	CTNK1	$ 44.18
- 155 Mbps port	CTNK1	44.18
• Peak Cell Rate Service, per 40.7 Mbps Increment of total bandwidth		
- 45 Mbps port	CTNG1	997.50
- 155 Mbps port	CTNG1	997.50

(M)

Certain material on this page formerly appeared on Page 8-356.

8. ADVANCED COMMUNICATIONS NETWORKS

8.5 ATM SERVICE (T)(M)

8.5.6 RATES AND CHARGES GRANDFATHERED

A. 12 Months

1. Cell Transfer (Cont'd)

	USOC	MONTHLY RATE	
• Peak Cell Rate Service, per 149 Mbps Increment of total bandwidth			
- 155 Mbps port	CTNH1	$3,610.00	(M)

Certain material on this page formerly appeared on Page 8-357.

8. ADVANCED COMMUNICATIONS NETWORKS

8.5 ATM SERVICE (T)(M)

8.5.6 RATES AND CHARGES GRANDFATHERED

A. 12 Months

1. Cell Transfer (Cont'd)

	USOC	MONTHLY RATE
• Sustained Cell Rate Service, per 64 kbps Increment of total bandwidth		
- 1.544 Mbps port	CTNE1	$ 2.38
- 45 Mbps port	CTNE1	2.38
- 155 Mbps port	CTNE1	2.38
• Sustained Cell Rate Service, per 1 Mbps Increment of total bandwidth		
- 1.544 Mbps port	CTNC1	35.63
- 45 Mbps port	CTNC1	35.63
- 155 Mbps port	CTNC1	35.63

(M)

Certain material on this page formerly appeared on Page 8-358.

8. ADVANCED COMMUNICATIONS NETWORKS

8.5 ATM SERVICE (T)(M)

8.5.6 RATES AND CHARGES GRANDFATHERED

A. 12 Months

1. Cell Transfer (Cont'd)

	USOC	MONTHLY RATE
• Sustained Cell Rate Service, per 1.544 Mbps Increment of total bandwidth		
- 45 Mbps port	CTNF1	$ 42.75
- 155 Mbps port	CTNF1	42.75
• Sustained Cell Rate Service, Maximum Burst Size, per VCC		
- 32 Cells	CTSA1	–
- 100 Cells[1]	CTSB1	95.00
- 200 Cells[1]	CTSC1	190.00

	USOC	NONRECURRING CHARGE	MONTHLY RATE
4. Central Office Connecting Channel (COCC), per COCC			
- Up to 1.544 Mbps	CFNX1	$25.00	$ 0.62
- Up to 45 or 155 Mbps	CFNX1	30.00	11.88

[1] The Maximum Burst Size of 200 Cells requires the customer to purchase a minimum of 4 Mbps of Sustained Cell Rate Service for each VCC. (M)

Certain material on this page formerly appeared on Pages 8-359 and 8-361.

8. ADVANCED COMMUNICATIONS NETWORKS

8.5 ATM SERVICE (T)(M)
8.5.6 RATES AND CHARGES GRANDFATHERED

B. 24 Months

	USOC	NONRECURRING CHARGE
3. Cell Transfer		
• First VCC	NR9AV	$150.00
• Each additional VCC	NR9AW	50.00
• First VPC	NR9AX	150.00
• Each additional VPC	NR9AY	50.00
• Subsequent VCC(s) or VPC order charge, per order[1]	NR9AZ	160.00

	USOC	NONRECURRING CHARGE	MONTHLY RATE
• Fixed Rate, per Port			
- 1.544 Mbps	C3TX2	$161.45	$262.50
- 45 Mbps	C3TX2	161.45	412.50
- 155 Mbps	C3TX2	161.45	750.00

[1] In addition to the Subsequent VCC(s) or VPC order charge, the First and Each Additional VCC or VPC nonrecurring charges apply, as applicable. (M)

Certain material on this page formerly appeared on Page 8-364.

8. ADVANCED COMMUNICATIONS NETWORKS

8.5 ATM SERVICE (T)(M)

8.5.6 RATES AND CHARGES GRANDFATHERED

C. 24 Months

3. Cell Transfer (Cont'd)

	USOC	MONTHLY RATE
• Peak Cell Rate Service, per 64 kbps Increment of total bandwidth		
- 1.544 Mbps port	CTNB2	$1.88
- 45 Mbps port	CTNB2	1.88
- 155 Mbps port	CTNB2	1.88
• Peak Cell Rate Service, per 75 kbps Increment of total bandwidth		
- 1.544 Mbps port	CTNJ2	2.16
- 45 Mbps port	CTNJ2	2.16
- 155 Mbps port	CTNJ2	2.16

(M)

Certain material on this page formerly appeared on Page 8-365.

8. ADVANCED COMMUNICATIONS NETWORKS

8.5 ATM SERVICE (T)(M)

8.5.6 RATES AND CHARGES GRANDFATHERED

C. 24 Months

3. Cell Transfer (Cont'd)

	USOC	MONTHLY RATE
• Peak Cell Rate Service, per 1 Mbps Increment of total bandwidth		
- 1.544 Mbps port	CTNA2	$28.13
- 45 Mbps port	CTNA2	28.13
- 155 Mbps port	CTNA2	28.13
• Peak Cell Rate Service, per 1.544 Mbps Increment of total bandwidth		
- 45 Mbps port	CTND2	37.50
- 155 Mbps port	CTND2	37.50

(M)

Certain material on this page formerly appeared on Pages 8-366.

8. ADVANCED COMMUNICATIONS NETWORKS

8.5 ATM SERVICE (T)(M)

8.5.6 RATES AND CHARGES GRANDFATHERED

C. 24 Months

3. Cell Transfer (Cont'd)

	USOC	MONTHLY RATE
• Peak Cell Rate Service, per 1.787 Mbps Increment of total bandwidth		
- 45 Mbps port	CTNK2	$ 43.59
- 155 Mbps port	CTNK2	43.59
• Peak Cell Rate Service, per 40.7 Mbps Increment of total bandwidth		
- 45 Mbps port	CTNG2	984.38
- 155 Mbps port	CTNG2	984.38

(M)

Certain material on this page formerly appeared on Page 8-367.

8. ADVANCED COMMUNICATIONS NETWORKS

8.5 ATM SERVICE (T)(M)

8.5.6 RATES AND CHARGES GRANDFATHERED

C. 24 Months

3. Cell Transfer (Cont'd)

	USOC	MONTHLY RATE	
• Peak Cell Rate Service, per 149 Mbps Increment of total bandwidth			
- 155 Mbps port	CTNH2	$3,562.50	(M)

Certain material on this page formerly appeared on Page 8-368.

8. ADVANCED COMMUNICATIONS NETWORKS

8.5 ATM SERVICE (T)(M)

8.5.6 RATES AND CHARGES GRANDFATHERED

C. 24 Months

3. Cell Transfer (Cont'd)

	USOC	MONTHLY RATE
• Sustained Cell Rate Service, per 64 kbps Increment of total bandwidth		
- 1.544 Mbps port	CTNE2	$ 2.34
- 45 Mbps port	CTNE2	2.34
- 155 Mbps port	CTNE2	2.34
• Sustained Cell Rate Service, per 1 Mbps Increment of total bandwidth		
- 1.544 Mbps port	CTNC2	35.16
- 45 Mbps port	CTNC2	35.16
- 155 Mbps port	CTNC2	35.16

(M)

Certain material on this page formerly appeared on Page 8-369.

8. ADVANCED COMMUNICATIONS NETWORKS

8.5 ATM SERVICE (T)(M)

8.5.6 RATES AND CHARGES GRANDFATHERED

C. 24 Months

3. Cell Transfer (Cont'd)

	USOC	MONTHLY RATE
• Sustained Cell Rate Service, per 1.544 Mbps Increment of total bandwidth		
- 45 Mbps port	CTNF2	$ 42.19
- 155 Mbps port	CTNF2	42.19
• Sustained Cell Rate Service, Maximum Burst Size, per VCC		
- 32 Cells	CTSA2	–
- 100 Cells[1]	CTSB2	93.75
- 200 Cells[1]	CTSC2	187.50

	USOC	NONRECURRING CHARGE	MONTHLY RATE
4. Central Office Connecting Channel (COCC), per COCC			
- Up to 1.544 Mbps	CFNX2	$25.00	$ 0.61
- Up to 45 or 155 Mbps	CFNX2	30.00	11.72

[1] The Maximum Burst Size of 200 Cells requires the customer to purchase a minimum of 4 Mbps of Sustained Cell Rate Service for each VCC. (M)

Certain material on this page formerly appeared on Pages 8-370 and 8-372.

8. ADVANCED COMMUNICATIONS NETWORKS

8.5 ATM SERVICE (T)(M)

8.5.6 RATES AND CHARGES GRANDFATHERED

D. 36 Months (Cont'd)

	USOC	NONRECURRING CHARGE
3. Cell Transfer		
• First VCC	NR9AV	$150.00
• Each additional VCC	NR9AW	50.00
• First VPC	NR9AX	150.00
• Each additional VPC	NR9AY	50.00
• Subsequent VCC(s) or VPC order charge, per order[1]	NR9AZ	160.00

[1] In addition to the Subsequent VCC(s) or VPC order charge, the First and Each Additional VCC or VPC nonrecurring charges apply, as applicable. (M)

Certain material on this page formerly appeared on Page 8-375.

8. ADVANCED COMMUNICATIONS NETWORKS

8.5 ATM SERVICE (T)(M)

8.5.6 RATES AND CHARGES GRANDFATHERED

D. 36 Months

3. Cell Transfer (Cont'd)

	USOC	NONRECURRING CHARGE	MONTHLY RATE	
• Fixed Rate, per Port				
- 1.544 Mbps	C3TX3	$161.45	$259.00	
- 45 Mbps	C3TX3	161.45	407.00	
- 155 Mbps	C3TX3	161.45	740.00	(M)

Certain material on this page formerly appeared on Page 8-376.

8. ADVANCED COMMUNICATIONS NETWORKS

8.5 ATM SERVICE (T)(M)

8.5.6 RATES AND CHARGES GRANDFATHERED

D. 36 Months

3. Cell Transfer (Cont'd)

	USOC	MONTHLY RATE
• Peak Cell Rate Service, per 64 kbps Increment of total bandwidth		
- 1.544 Mbps port	CTNB3	$1.85
- 45 Mbps port	CTNB3	1.85
- 155 Mbps port	CTNB3	1.85
• Peak Cell Rate Service, per 75 kbps Increment of total bandwidth		
- 1.544 Mbps port	CTNJ3	2.13
- 45 Mbps port	CTNJ3	2.13
- 155 Mbps port	CTNJ3	2.13

(M)

Certain material on this page formerly appeared on Page 8-377.

8. ADVANCED COMMUNICATIONS NETWORKS

8.5 ATM SERVICE (T)(M)

8.5.6 RATES AND CHARGES GRANDFATHERED

D. 36 Months

3. Cell Transfer (Cont'd)

	USOC	MONTHLY RATE
• Peak Cell Rate Service, per 1 Mbps Increment of total bandwidth		
- 1.544 Mbps port	CTNA3	$27.75
- 45 Mbps port	CTNA3	27.75
- 155 Mbps port	CTNA3	27.75
• Peak Cell Rate Service, per 1.544 Mbps Increment of total bandwidth		
- 45 Mbps port	CTND3	37.00
- 155 Mbps port	CTND3	37.00

(M)

Certain material on this page formerly appeared on Page 8-378.

8. ADVANCED COMMUNICATIONS NETWORKS

8.5 ATM SERVICE (T)(M)

8.5.6 RATES AND CHARGES GRANDFATHERED

D. 36 Months

3. Cell Transfer (Cont'd)

	USOC	MONTHLY RATE
• Peak Cell Rate Service, per 1.787 Mbps Increment of total bandwidth		
- 45 Mbps port	CTNK3	$43.01
- 155 Mbps port	CTNK3	43.01
• Peak Cell Rate Service, per 40.7 Mbps Increment of total bandwidth		
- 45 Mbps port	CTNG3	971.25
- 155 Mbps port	CTNG3	971.25 (M)

Certain material on this page formerly appeared on Page 8-379.

8. ADVANCED COMMUNICATIONS NETWORKS

8.5 ATM SERVICE (T)(M)

8.5.6 RATES AND CHARGES GRANDFATHERED

D. 36 Months

3. Cell Transfer (Cont'd)

	USOC	MONTHLY RATE	
• Peak Cell Rate Service, per 149 Mbps Increment of total bandwidth			
- 155 Mbps port	CTNH3	$3,515.00	(M)

Certain material on this page formerly appeared on Page 8-380.

8. ADVANCED COMMUNICATIONS NETWORKS

8.5 ATM SERVICE (T)(M)

8.5.6 RATES AND CHARGES GRANDFATHERED

D. 36 Months

3. Cell Transfer (Cont'd)

	USOC	MONTHLY RATE
• Sustained Cell Rate Service, per 64 kbps Increment of total bandwidth		
- 1.544 Mbps port	CTNE3	$ 2.31
- 45 Mbps port	CTNE3	2.31
- 155 Mbps port	CTNE3	2.31
• Sustained Cell Rate Service, per 1 Mbps Increment of total bandwidth		
- 1.544 Mbps port	CTNC3	34.69
- 45 Mbps port	CTNC3	34.69
- 155 Mbps port	CTNC3	34.69

(M)

Certain material on this page formerly appeared on Page 8-381.

8. ADVANCED COMMUNICATIONS NETWORKS

8.5 ATM SERVICE (T)(M)

8.5.6 RATES AND CHARGES GRANDFATHERED

D. 36 Months

3. Cell Transfer (Cont'd)

	USOC	MONTHLY RATE
• Sustained Cell Rate Service, per 1.544 Mbps Increment of total bandwidth		
- 45 Mbps port	CTNF3	$ 41.63
- 155 Mbps port	CTNF3	41.63
• Sustained Cell Rate Service, Maximum Burst Size, per VCC		
- 32 Cells	CTSA3	–
- 100 Cells[1]	CTSB3	92.50
- 200 Cells[1]	CTSC3	185.00

	USOC	NONRECURRING CHARGE	MONTHLY RATE
4. Central Office Connecting Channel (COCC), per COCC			
- Up to 1.544 Mbps	CFNX3	$25.00	$ 0.60
- Up to 44.736 Mbps	CFNX3	30.00	11.56

[1] The Maximum Burst Size of 200 Cells requires the customer to purchase a minimum of 4 Mbps of Sustained Cell Rate Service for each VCC. (M)

Certain material on this page formerly appeared on Pages 8-382 and 8-384.

8. ADVANCED COMMUNICATIONS NETWORKS

8.5 ATM SERVICE (T)(M)
8.5.6 RATES AND CHARGES GRANDFATHERED

E. 48 Months (Cont'd)

	USOC	NONRECURRING CHARGE
3. Cell Transfer		
• First VCC	NR9AV	$150.00
• Each additional VCC	NR9AW	50.00
• First VPC	NR9AX	150.00
• Each additional VPC	NR9AY	50.00
• Subsequent VCC(s) or VPC order charge, per order[1]	NR9AZ	160.00

	USOC	NONRECURRING CHARGE	MONTHLY RATE
• Fixed Rate, per Port			
- 1.544 Mbps	C3TX4	$161.45	$255.50
- 45 Mbps	C3TX4	161.45	401.50
- 155 Mbps	C3TX4	161.45	730.00

[1] In addition to the Subsequent VCC(s) or VPC order charge, the First and Each Additional VCC or VPC nonrecurring charges apply, as applicable. (M)

Certain material on this page formerly appeared on Page 8-387.

8. ADVANCED COMMUNICATIONS NETWORKS

8.5 ATM SERVICE (T)(M)

8.5.6 RATES AND CHARGES GRANDFATHERED

E. 48 Months

3. Cell Transfer (Cont'd)

	USOC	MONTHLY RATE
• Peak Cell Rate Service, per 64 kbps Increment of total bandwidth		
- 1.544 Mbps port	CTNB4	$1.83
- 45 Mbps port	CTNB4	1.83
- 155 Mbps port	CTNB4	1.83
• Peak Cell Rate Service, per 75 kbps Increment of total bandwidth		
- 1.544 Mbps port	CTNJ4	2.10
- 45 Mbps port	CTNJ4	2.10
- 155 Mbps port	CTNJ4	2.10

(M)

Certain material on this page formerly appeared on Page 8-388.

8. ADVANCED COMMUNICATIONS NETWORKS

8.5 ATM SERVICE (T)(M)

8.5.6 RATES AND CHARGES GRANDFATHERED

E. 48 Months

3. Cell Transfer (Cont'd)

	USOC	MONTHLY RATE
• Peak Cell Rate Service, per 1 Mbps Increment of total bandwidth		
- 1.544 Mbps port	CTNA4	$27.38
- 45 Mbps port	CTNA4	27.38
- 155 Mbps port	CTNA4	27.38
• Peak Cell Rate Service, per 1.544 Mbps Increment of total bandwidth		
- 45 Mbps port	CTND4	36.50
- 155 Mbps port	CTND4	36.50

(M)

Certain material on this page formerly appeared on Page 8-389.

8. ADVANCED COMMUNICATIONS NETWORKS

8.5 ATM SERVICE (T)(M)

8.5.6 RATES AND CHARGES GRANDFATHERED

E. 48 Months

3. Cell Transfer (Cont'd)

	USOC	MONTHLY RATE
• Peak Cell Rate Service, per 1.787 Mbps Increment of total bandwidth		
- 45 Mbps port	CTNK4	$ 42.43
- 155 Mbps port	CTNK4	42.43
• Peak Cell Rate Service, per 40.7 Mbps Increment of total bandwidth		
- 45 Mbps port	CTNG4	958.13
- 155 Mbps port	CTNG4	958.13

(M)

Certain material on this page formerly appeared on Page 8-390.

8. ADVANCED COMMUNICATIONS NETWORKS

8.5 ATM SERVICE (T)(M)

8.5.6 RATES AND CHARGES GRANDFATHERED

E. 48 Months

3. Cell Transfer (Cont'd)

	USOC	MONTHLY RATE	
• Peak Cell Rate Service, per 149 Mbps Increment of total bandwidth			
- 155 Mbps port	CTNH4	$3,467.50	(M)

Certain material on this page formerly appeared on Page 8-391.

8. ADVANCED COMMUNICATIONS NETWORKS

8.5 ATM SERVICE (T)(M)

8.5.6 RATES AND CHARGES GRANDFATHERED

E. 48 Months

3. Cell Transfer (Cont'd)

	USOC	MONTHLY RATE
• Sustained Cell Rate Service, per 64 kbps Increment of total bandwidth		
- 1.544 Mbps port	CTNE4	$ 2.28
- 45 Mbps port	CTNE4	2.28
- 155 Mbps port	CTNE4	2.28
• Sustained Cell Rate Service, per 1 Mbps Increment of total bandwidth		
- 1.544 Mbps port	CTNC4	34.22
- 45 Mbps port	CTNC4	34.22
- 155 Mbps port	CTNC4	34.22

(M)

Certain material on this page formerly appeared on Page 8-392.

8. ADVANCED COMMUNICATIONS NETWORKS

8.5 ATM SERVICE (T)(M)

8.5.6 RATES AND CHARGES GRANDFATHERED

E. 48 Months

3. Cell Transfer (Cont'd)

	USOC	MONTHLY RATE
• Sustained Cell Rate Service, per 1.544 Mbps Increment of total bandwidth		
- 45 Mbps port	CTNF4	$ 41.06
- 155 Mbps port	CTNF4	41.06
• Sustained Cell Rate Service, Maximum Burst Size, per VCC		
- 32 Cells	CTSA4	–
- 100 Cells[1]	CTSB4	91.25
- 200 Cells[1]	CTSC4	182.50

	USOC	NONRECURRING CHARGE	MONTHLY RATE
4. Central Office Connecting Channel (COCC), per COCC			
- Up to 1.544 Mbps	CFNX3	$25.00	$ 0.60
- Up to 44.736 Mbps	CFNX3	30.00	11.56

[1] The Maximum Burst Size of 200 Cells requires the customer to purchase a minimum of 4 Mbps of Sustained Cell Rate Service for each VCC. (M)

Certain material on this page formerly appeared on Pages 8-393 and 8-395.

8. ADVANCED COMMUNICATIONS NETWORKS

8.5 ATM SERVICE (T)(M)
8.5.6 RATES AND CHARGES GRANDFATHERED

F. 60 Months (Cont'd)

	USOC	NONRECURRING CHARGE
3. Cell Transfer		
• First VCC	NR9AV	$150.00
• Each additional VCC	NR9AW	50.00
• First VPC	NR9AX	150.00
• Each additional VPC	NR9AY	50.00
• Subsequent VCC(s) or VPC order charge, per order[1]	NR9AZ	160.00

	USOC	NONRECURRING CHARGE	MONTHLY RATE
• Fixed Rate, per Port			
- 1.544 Mbps	C3TX5	$161.45	$252.00
- 45 Mbps	C3TX5	161.45	396.00
- 155 Mbps	C3TX5	161.45	720.00

[1] In addition to the Subsequent VCC(s) or VPC order charge, the First and Each Additional VCC or VPC nonrecurring charges apply, as applicable. (M)

Certain material on this page formerly appeared on Page 8-398.

8. ADVANCED COMMUNICATIONS NETWORKS

8.5 ATM SERVICE (T)(M)

8.5.6 RATES AND CHARGES GRANDFATHERED

F. 60 Months

3. Cell Transfer (Cont'd)

	USOC	MONTHLY RATE
• Peak Cell Rate Service, per 64 kbps Increment of total bandwidth		
- 1.544 Mbps port	CTNB5	$1.80
- 45 Mbps port	CTNB5	1.80
- 155 Mbps port	CTNB5	1.80
• Peak Cell Rate Service, per 75 kbps Increment of total bandwidth		
- 1.544 Mbps port	CTNJ5	2.07
- 45 Mbps port	CTNJ5	2.07
- 155 Mbps port	CTNJ5	2.07 (M)

Certain material on this page formerly appeared on Page 8-399.

8. ADVANCED COMMUNICATIONS NETWORKS

8.5 ATM SERVICE (T)(M)

8.5.6 RATES AND CHARGES GRANDFATHERED

F. 60 Months

3. Cell Transfer (Cont'd)

	USOC	MONTHLY RATE
• Peak Cell Rate Service, per 1 Mbps Increment of total bandwidth		
- 1.544 Mbps port	CTNA5	$27.00
- 45 Mbps port	CTNA5	27.00
- 155 Mbps port	CTNA5	27.00
• Peak Cell Rate Service, per 1.544 Mbps Increment of total bandwidth		
- 45 Mbps port	CTND5	36.00
- 155 Mbps port	CTND5	36.00 (M)

Certain material on this page formerly appeared on Page 8-400.

8. ADVANCED COMMUNICATIONS NETWORKS

8.5 ATM SERVICE (T)(M)

8.5.6 RATES AND CHARGES GRANDFATHERED

F. 60 Months

3. Cell Transfer (Cont'd)

	USOC	MONTHLY RATE
• Peak Cell Rate Service, per 1.787 Mbps Increment of total bandwidth		
- 45 Mbps port	CTNK5	$ 41.85
- 155 Mbps port	CTNK5	41.85
• Peak Cell Rate Service, per 40.7 Mbps Increment of total bandwidth		
- 45 Mbps port	CTNG5	945.00
- 155 Mbps port	CTNG5	945.00 (M)

Certain material on this page formerly appeared on Page 8-401.

8. ADVANCED COMMUNICATIONS NETWORKS

8.5 ATM SERVICE (T)(M)

8.5.6 RATES AND CHARGES GRANDFATHERED

F. 60 Months

3. Cell Transfer (Cont'd)

	USOC	MONTHLY RATE	
• Peak Cell Rate Service, per 149 Mbps Increment of total bandwidth			
- 155 Mbps port	CTNH5	$3,420.00	(M)

Certain material on this page formerly appeared on Page 8-402.

8. ADVANCED COMMUNICATIONS NETWORKS

8.5 ATM SERVICE (T)(M)

8.5.6 RATES AND CHARGES GRANDFATHERED

F. 60 Months

3. Cell Transfer (Cont'd)

	USOC	MONTHLY RATE
• Sustained Cell Rate Service, per 64 kbps Increment of total bandwidth		
- 1.544 Mbps port	CTNE5	$ 2.25
- 45 Mbps port	CTNE5	2.25
- 155 Mbps port	CTNE5	2.25
• Sustained Cell Rate Service, per 1 Mbps Increment of total bandwidth		
- 1.544 Mbps port	CTNC5	33.75
- 45 Mbps port	CTNC5	33.75
- 155 Mbps port	CTNC5	33.75

(M)

Certain material on this page formerly appeared on Page 8-403.

8. ADVANCED COMMUNICATIONS NETWORKS

8.5 ATM SERVICE (T)(M)

8.5.6 RATES AND CHARGES GRANDFATHERED

F. 60 Months

3. Cell Transfer (Cont'd)

	USOC	MONTHLY RATE
• Sustained Cell Rate Service, per 1.544 Mbps Increment of total bandwidth		
- 45 Mbps port	CTNF5	$ 40.50
- 155 Mbps port	CTNF5	40.50
• Sustained Cell Rate Service, Maximum Burst Size, per 64 VCC		
- 32 Cells	CTSA5	–
- 100 Cells[1]	CTSB5	90.00
- 200 Cells[1]	CTSC5	180.00

[1] The Maximum Burst Size of 200 Cells requires the customer to purchase a minimum of 4 Mbps of Sustained Cell Rate Service for each VCC. (M)

Certain material on this page formerly appeared on Page 8-404.

8. ADVANCED COMMUNICATIONS NETWORKS

8.5 ATM SERVICE (T)(M)

8.5.6 RATES AND CHARGES GRANDFATHERED

F. 60 Months (Cont'd)

	USOC	NONRECURRING CHARGE	MONTHLY RATE	
4. Central Office Connecting Channel (COCC), per COCC				
- Up to 1.544 Mbps	CFNX5	$25.00	$ 0.59	
- Up to 45 or 155 Mbps	CFNX5	30.00	11.25	(M)

Certain material on this page formerly appeared on Page 8-406.

8. ADVANCED COMMUNICATIONS NETWORKS

8.5 ATM SERVICE (T)(M)
8.5.6 RATES AND CHARGES GRANDFATHERED

G. 72 Months

	USOC	NONRECURRING CHARGE	MONTHLY RATE
1. Optical Access Link, per Access Link			
• 45 Mbps	N7AX6	$ 840.27	$ 639.00
• 155 Mbps	N7AX6	860.24	954.00
• 45 Mbps optioned with protection	N7AR6	1,320.00	1,080.00
• 155 Mbps optioned with protection	N7AR6	1,380.00	2,520.00 (M)

Certain material on this page formerly appeared on Page 8-407.

8. ADVANCED COMMUNICATIONS NETWORKS

8.5 ATM SERVICE (T)(M)
8.5.6 RATES AND CHARGES GRANDFATHERED

G. 72 Months

	USOC	NONRECURRING CHARGE	MONTHLY RATE	
2. Stand-Alone Optical Access Link, per Access Link				
• 45 Mbps	N1AX6	$ 840.27	$ 639.00	
• 155 Mbps	N1AX6	860.24	954.00	
• 45 Mbps optioned with protection	N1AR6	1,320.00	1,080.00	
• 155 Mbps optioned with protection	N1AR6	1,380.00	2,520.00	(M)

Certain material on this page formerly appeared on Page 8-408.

8. ADVANCED COMMUNICATIONS NETWORKS

8.5 ATM SERVICE (T)(M)
8.5.6 RATES AND CHARGES GRANDFATHERED

G. 72 Months (Cont'd)

	USOC	NONRECURRING CHARGE
3. Cell Transfer		
• First VCC	NR9AV	$150.00
• Each additional VCC	NR9AW	50.00
• First VPC	NR9AX	150.00
• Each additional VPC	NR9AY	50.00
• Subsequent VCC(s) or VPC order charge, per order[1]	NR9AZ	160.00

	USOC	NONRECURRING CHARGE	MONTHLY RATE
• Fixed Rate, per Port			
- 1.544 Mbps	C3TX6	$161.45	$252.00
- 45 Mbps	C3TX6	161.45	396.00
- 155 Mbps	C3TX6	161.45	720.00
Vintage[2]			396.00

[1] In addition to the Subsequent VCC(s) or VPC order charge, the First and Each Additional VCC or VPC nonrecurring charges apply, as applicable. (M)

[2] Vintage rate in effect 10/2/95 through 3/14/97.

Certain material on this page formerly appeared on Page 8-409.

8. ADVANCED COMMUNICATIONS NETWORKS

8.5 ATM SERVICE (T)(M)

8.5.6 RATES AND CHARGES GRANDFATHERED

G. 72 Months

3. Cell Transfer (Cont'd)

	USOC	MONTHLY RATE
• Peak Cell Rate Service, per 64 kbps Increment of total bandwidth		
- 1.544 Mbps port	CTNB6	$1.80
- 45 Mbps port	CTNB6	1.80
- 155 Mbps port	CTNB6	1.80
• Peak Cell Rate Service, per 75 kbps Increment of total bandwidth		
- 1.544 Mbps port	CTNJ6	2.07
- 45 Mbps port	CTNJ6	2.07
- 155 Mbps port	CTNJ6	2.07 (M)

Certain material on this page formerly appeared on Page 8-410.

8. ADVANCED COMMUNICATIONS NETWORKS

8.5 ATM SERVICE (T)(M)

8.5.6 RATES AND CHARGES GRANDFATHERED

G. 72 Months

3. Cell Transfer (Cont'd)

	USOC	MONTHLY RATE
• Peak Cell Rate Service, per 1 Mbps Increment of total bandwidth		
- 1.544 Mbps port	CTNA6	$27.00
- 45 Mbps port	CTNA6	27.00
- 155 Mbps port	CTNA6	27.00
• Peak Cell Rate Service, per 1.544 Mbps Increment of total bandwidth		
- 45 Mbps port	CTND6	36.00
- 155 Mbps port	CTND6	36.00 (M)

Certain material on this page formerly appeared on Page 8-411.

8. ADVANCED COMMUNICATIONS NETWORKS

8.5 ATM SERVICE (T)(M)

8.5.6 RATES AND CHARGES GRANDFATHERED

G. 72 Months

3. Cell Transfer (Cont'd)

	USOC	MONTHLY RATE
• Peak Cell Rate Service, per 1.787 Mbps Increment of total bandwidth		
- 45 Mbps port	CTNK6	$41.85
- 155 Mbps port	CTNK6	41.85
• Peak Cell Rate Service, per 40.7 Mbps Increment of total bandwidth		
- 45 Mbps port	CTNG6	945.00
- 155 Mbps port	CTNG6	945.00

(M)

Certain material on this page formerly appeared on Page 8-412.

8. ADVANCED COMMUNICATIONS NETWORKS

8.5 ATM SERVICE (T)(M)

8.5.6 RATES AND CHARGES GRANDFATHERED

G. 72 Months

3. Cell Transfer (Cont'd)

	USOC	MONTHLY RATE	
• Peak Cell Rate Service, per 149 Mbps Increment of total bandwidth			
- 155 Mbps port	CTNH6	$3,420.00	(M)

Certain material on this page formerly appeared on Page 8-413.

8. ADVANCED COMMUNICATIONS NETWORKS

8.5 ATM SERVICE (T)(M)

8.5.6 RATES AND CHARGES GRANDFATHERED

G. 72 Months

3. Cell Transfer (Cont'd)

	USOC	MONTHLY RATE
• Sustained Cell Rate Service, per 64 kbps Increment of total bandwidth		
- 1.544 Mbps port	CTNE6	$ 2.25
- 45 Mbps port	CTNE6	2.25
- 155 Mbps port	CTNE6	2.25
• Sustained Cell Rate Service, per 1 Mbps Increment of total bandwidth		
- 1.544 Mbps port	CTNC6	33.75
- 45 Mbps port	CTNC6	33.75
- 155 Mbps port	CTNC6	33.75 (M)

Certain material on this page formerly appeared on Page 8-414.

8. ADVANCED COMMUNICATIONS NETWORKS

8.5 ATM SERVICE (T)(M)

8.5.6 RATES AND CHARGES GRANDFATHERED

G. 72 Months

3. Cell Transfer (Cont'd)

	USOC	MONTHLY RATE
• Sustained Cell Rate Service, per 1.544 Mbps Increment of total bandwidth		
- 45 Mbps port	CTNF6	$ 40.50
- 155 Mbps port	CTNF6	40.50
• Sustained Cell Rate Service, Maximum Burst Size, per VCC		
- 32 Cells	CTSA6	–
- 100 Cells[1]	CTSB6	90.00
- 200 Cells[1]	CTSC6	180.00

[1] The Maximum Burst Size of 200 Cells requires the customer to purchase a minimum of 4 Mbps of Sustained Cell Rate Service for each VCC. (M)

Certain material on this page formerly appeared on Page 8-415.

8. ADVANCED COMMUNICATIONS NETWORKS

8.5 ATM SERVICE (T)(M)

8.5.6 RATES AND CHARGES GRANDFATHERED

G. 72 Months

3. Cell Transfer (Cont'd)

	USOC	MONTHLY RATE
• Unspecified Bit Rate, per 64 kbps Increment of total bandwidth		
- 1.544 Mbps port	CTUE6	$ 0.72
- 45 Mbps port	CTUE6	0.72
- 155 Mbps port	CTUE6	0.72
• Unspecified Bit Rate, per 1 Mbps Increment of total bandwidth		
- 1.544 Mbps port	CTUC6	10.80
- 45 Mbps port	CTUC6	10.80
- 155 Mbps port	CTUC6	10.80 (M)

Certain material on this page formerly appeared on Page 8-416.

8. ADVANCED COMMUNICATIONS NETWORKS

8.5 ATM SERVICE (T)(M)

8.5.6 RATES AND CHARGES GRANDFATHERED

G. 72 Months (Cont'd)

	USOC	NONRECURRING CHARGE	MONTHLY RATE	
4. Central Office Connecting Channel (COCC), per COCC				
- Up to 1.544 Mbps	CFNX6	$25.00	$ 0.59	
- Up to 45 or 155 Mbps	CFNX6	30.00	11.25	(M)

Certain material on this page formerly appeared on Page 8-417.

8. ADVANCED COMMUNICATIONS NETWORKS

8.5 ATM SERVICE (T)(M)
8.5.6 RATES AND CHARGES GRANDFATHERED

H. 84 Months

	USOC	NONRECURRING CHARGE	MONTHLY RATE
1. Optical Access Link, per Access Link			
• 45 Mbps	N7AX7	$ 840.27	$ 639.00
• 155 Mbps	N7AX7	860.24	954.00
• 45 Mbps optioned with protection	N7AR7	1,320.00	1,080.00
• 155 Mbps optioned with protection	N7AR7	1,380.00	2,520.00 (M)

Certain material on this page formerly appeared on Page 8-418.

8. ADVANCED COMMUNICATIONS NETWORKS

8.5 ATM SERVICE (T)(M)
8.5.6 RATES AND CHARGES GRANDFATHERED

H. 84 Months

	USOC	NONRECURRING CHARGE	MONTHLY RATE	
2. Stand-Alone Optical Access Link, per Access Link				
• 45 Mbps	N1AX7	$ 840.27	$ 639.00	
• 155 Mbps	N1AX7	860.24	954.00	
• 45 Mbps optioned with protection	N1AR7	1,320.00	1,080.00	
• 155 Mbps optioned with protection	N1AR7	1,380.00	2,520.00	(M)

Certain material on this page formerly appeared on Page 8-419.

8. ADVANCED COMMUNICATIONS NETWORKS

8.5 ATM SERVICE
8.5.6 RATES AND CHARGES GRANDFATHERED

H. 84 Months (Cont'd)

	USOC	NONRECURRING CHARGE
3. Cell Transfer		
• First VCC	NR9AV	$150.00
• Each additional VCC	NR9AW	50.00
• First VPC	NR9AX	150.00
• Each additional VPC	NR9AY	50.00
• Subsequent VCC(s) or VPC order charge, per order[1]	NR9AZ	160.00

	USOC	NONRECURRING CHARGE	MONTHLY RATE	
• Fixed Rate, per Port				
- 1.544 Mbps	C3TX7	$161.45	$252.00	
- 45 Mbps	C3TX7	161.45	396.00	
- 155 Mbps	C3TX7	161.45	720.00	
- Vintage				(T)
10/2/95 through 3/14/97			396.00	(T)

[1] In addition to the Subsequent VCC(s) or VPC order charge, the First and Each Additional VCC or VPC nonrecurring charges apply, as applicable.

8. ADVANCED COMMUNICATIONS NETWORKS

8.5 ATM SERVICE (T)(M)

8.5.6 RATES AND CHARGES GRANDFATHERED

H. 84 Months

3. Cell Transfer (Cont'd)

	USOC	MONTHLY RATE
• Peak Cell Rate Service, per 64 kbps Increment of total bandwidth		
- 1.544 Mbps port	CTNB7	$1.80
- 45 Mbps port	CTNB7	1.80
- 155 Mbps port	CTNB7	1.80
• Peak Cell Rate Service, per 75 kbps Increment of total bandwidth		
- 1.544 Mbps port	CTNJ7	2.07
- 45 Mbps port	CTNJ7	2.07
- 155 Mbps port	CTNJ7	2.07 (M)

Certain material on this page formerly appeared on Page 8-421.

8. ADVANCED COMMUNICATIONS NETWORKS

8.5 ATM SERVICE (T)(M)

8.5.6 RATES AND CHARGES GRANDFATHERED

H. 84 Months

3. Cell Transfer (Cont'd)

	USOC	MONTHLY RATE
• Peak Cell Rate Service, per 1 Mbps Increment of total bandwidth		
- 1.544 Mbps port	CTNA7	$27.00
- 45 Mbps port	CTNA7	27.00
- 155 Mbps port	CTNA7	27.00
• Peak Cell Rate Service, per 1.544 Mbps Increment of total bandwidth		
- 45 Mbps port	CTND7	36.00
- 155 Mbps port	CTND7	36.00 (M)

Certain material on this page formerly appeared on Page 8-422.

8. ADVANCED COMMUNICATIONS NETWORKS

8.5 ATM SERVICE (T)(M)

8.5.6 RATES AND CHARGES GRANDFATHERED

H. 84 Months

3. Cell Transfer (Cont'd)

	USOC	MONTHLY RATE
• Peak Cell Rate Service, per 1.787 Mbps Increment of total bandwidth		
- 45 Mbps port	CTNK7	$ 41.85
- 155 Mbps port	CTNK7	41.85
• Peak Cell Rate Service, per 40.7 Mbps Increment of total bandwidth		
- 45 Mbps port	CTNG7	945.00
- 155 Mbps port	CTNG7	945.00 (M)

Certain material on this page formerly appeared on Page 8-423.

8. ADVANCED COMMUNICATIONS NETWORKS

8.5 ATM SERVICE (T)(M)

8.5.6 RATES AND CHARGES GRANDFATHERED

H. 84 Months

3. Cell Transfer (Cont'd)

	USOC	MONTHLY RATE	
• Peak Cell Rate Service, per 149 Mbps Increment of total bandwidth			
- 155 Mbps port	CTNH7	$3,420.00	(M)

Certain material on this page formerly appeared on Page 8-424.

8. ADVANCED COMMUNICATIONS NETWORKS

8.5 ATM SERVICE (T)(M)

8.5.6 RATES AND CHARGES GRANDFATHERED

H. 84 Months

3. Cell Transfer (Cont'd)

	USOC	MONTHLY RATE
• Sustained Cell Rate Service, per 64 kbps Increment of total bandwidth		
- 1.544 Mbps port	CTNE7	$ 2.25
- 45 Mbps port	CTNE7	2.25
- 155 Mbps port	CTNE7	2.25
• Sustained Cell Rate Service, per 1 Mbps Increment of total bandwidth		
- 1.544 Mbps port	CTNC7	33.75
- 45 Mbps port	CTNC7	33.75
- 155 Mbps port	CTNC7	33.75

(M)

Certain material on this page formerly appeared on Page 8-425.

8. ADVANCED COMMUNICATIONS NETWORKS

8.5 ATM SERVICE (T)(M)

8.5.6 RATES AND CHARGES GRANDFATHERED

H. 84 Months

3. Cell Transfer (Cont'd)

	USOC	MONTHLY RATE
• Sustained Cell Rate Service, per 1.544 Mbps Increment of total bandwidth		
- 45 Mbps port	CTNF7	$ 40.50
- 155 Mbps port	CTNF7	40.50
• Sustained Cell Rate Service, Maximum Burst Size, per VCC		
- 32 Cells	CTSA7	–
- 100 Cells[1]	CTSB7	90.00
- 200 Cells[1]	CTSC7	180.00

[1] The Maximum Burst Size of 200 Cells requires the customer to purchase a minimum of 4 Mbps of Sustained Cell Rate Service for each VCC. (M)

Certain material on this page formerly appeared on Page 8-426.

8. ADVANCED COMMUNICATIONS NETWORKS

8.5 ATM SERVICE (T)(M)

8.5.6 RATES AND CHARGES GRANDFATHERED

H. 84 Months

3. Cell Transfer (Cont'd)

	USOC	MONTHLY RATE
• Unspecified Bit Rate, per 64 kbps Increment of total bandwidth		
- 1.544 Mbps port	CTUE7	$ 0.72
- 45 Mbps port	CTUE7	0.72
- 155 Mbps port	CTUE7	0.72
• Unspecified Bit Rate, per 1 Mbps Increment of total bandwidth		
- 1.544 Mbps port	CTUC7	10.80
- 45 Mbps port	CTUC7	10.80
- 155 Mbps port	CTUC7	10.80

(M)

Certain material on this page formerly appeared on Page 8-427.

8. ADVANCED COMMUNICATIONS NETWORKS

8.5 ATM SERVICE (T)(M)

8.5.6 RATES AND CHARGES GRANDFATHERED

H. 84 Months (Cont'd)

	USOC	NONRECURRING CHARGE	MONTHLY RATE	
4. Central Office Connecting Channel (COCC), per COCC				
- Up to 1.544 Mbps	CFNX7	$25.00	$ 0.59	
- Up to 45 or 155 Mbps	CFNX7	30.00	11.25	(M)

Certain material on this page formerly appeared on Page 8-428.

8. ADVANCED COMMUNICATIONS NETWORKS

8.6 LOCAL AREA NETWORK SWITCHING SERVICE

8.6.1 GENERAL[1] (T)

A. Description

Local Area Network (LAN) Switching Service (LSS) is a transport service designed to interconnect LSS interfaces between customer-designated premises. LSS provides a specific amount of bandwidth, and supports both point-to-point and multipoint connectivity between customer-designated locations. (C)

LSS data is transported over 45 Mbps and 155 Mbps access facilities using fiber optic facilities or equivalent. The customer may specify an unprotected or (C)
protected LSS transport option. An unprotected LSS transport option provides a single transport path from the LSS equipped wire center to the network interface at the customer-designated premises. A protected LSS transport option provides a standby transport facility that is automatically activated if the first path fails. An LSS customer may request Local Loop Diversity which provides an alternately routed local loop as referenced in Special Facilities Routing as set forth in 11.1.A.1., following. End-to-end connectivity between customer locations is provided by the Company's LSS network. (C)

LSS also supports LSS inter-working between two separate LSS networks and (C)
between LSS and ATM Service locations. The connection between the LSS/LSS or LSS/ATM Service locations is an ATM Virtual Channel Connection (VCC). VCCs are only available as Unspecified Bit Rate (UBR) for Monthly or fixed (C)
period service rate plans of 12, 24, 36, 48 and 60 Months. The VCC and UBR (C)
rate regulations and rates are as set forth in 8.5.2 and 8.5.5, preceding.

[1] Certain aspects of LAN Switching Service (LSS) have been grandfathered as of (N)
November 11, 2003, and can now be found in Section 8.99, following. (N)

(M) Certain material previously found on this page can now be found in Grandfathered Section 8.99.

8. ADVANCED COMMUNICATIONS NETWORKS

8.6 LOCAL AREA NETWORK SWITCHING SERVICE
8.6.1 GENERAL (Cont'd)

B. Service Elements

1. Network Interface

The Company network interface is the point of interconnection between Company communications facilities and terminal equipment or other customer-provided facilities. The network interface is the point of demarcation on the customer's premises where the Company's responsibility for LSS ends. (T)

Technical Specifications for LSS are delineated in Qwest Corporation Technical Publication PUB 77396.

2. LAN Link

The LAN Link provides the customer access to the Company's network supporting LSS. A LAN Link includes an NI and the fiber optic facility or equivalent. A customer may select 10 Mbps, 45 Mbps or 100 Mbps LAN Links. (C)
A customer may order Unprotected or Protected LAN Links. Unprotected and Protected LAN Links both provide a dedicated path between the Network Interface and the Company's network. Unprotected LAN Links provide a single path, while Protected LAN Links provide a standby path that is automatically activated if the first path fails. Protected LAN Links are only available where the (C)
customer's serving wire center is a LSS Service Point. When a customer accesses the Company's LSS network through a LAN Link where the customer's serving wire center is not a LSS Service Point, transport mileage will always apply. The LSS Service Point is described in 5., following. (C)

A customer may order Alternating Current (AC) or Direct Current (DC) with (N)
either a Protected or Unprotected LAN Link. An LSS customer may request Local Loop Diversity which provides an alternately routed local loop as referenced in Special Facilities Routing as set forth in 11.1.A.1., following. (N)

8. ADVANCED COMMUNICATIONS NETWORKS

8.6 LOCAL AREA NETWORK SWITCHING SERVICE
8.6.1 GENERAL

B. Service Elements (Cont'd)

3. Remote LAN Link

A Remote LAN Link is only used for access where LSS is not available. A customer may select a 10 Mbps or 45 Mbps Remote LAN Links. (T) (C)

4. Virtual Circuits

LSS connectivity between customer-designated premises is accomplished by provisioning LSS NIs and establishing connectivity through the Company's LSS network. Virtual Channel Connections (VCCs) are only available as UBR. (C) (C)

5. Service Point

Service Points are geographic locations designated by the Company where LSS is available. Company wire centers LSS equipped are identified in the National Exchange Carrier Association Tariff, F.C.C. No. 4 under ATM. (M) (M)

(M) Certain material on this page formerly appeared on Page 8-429.

8. ADVANCED COMMUNICATIONS NETWORKS

8.6 LOCAL AREA NETWORK SWITCHING SERVICE (Cont'd)

8.6.2 RATE ELEMENTS[1] (T)

A. LAN Link

A nonrecurring charge applies per LAN Link termination for each physical connection to the Company's LSS network. The monthly rate is assessed per LAN Link based upon the speed of the LAN Link (i.e., 10 Mbps, 45 Mbps or 100 Mbps) and whether the LAN Link is protected or unprotected. When a customer accesses (C)
LSS through a non-LSS serving wire center, transport mileage as set forth in B., following, applies in addition to the monthly rate for the LAN Link. (C)

B. Transport Mileage (T)

Transport Mileage provides for the transmission facilities between a non-LSS (C)
disclosed serving wire center associated with a customer-designated premises and (C)
the LSS network. There are two elements that apply: a fixed rate and a variable (T)
rate per mile. (T)

C. Remote LAN Link

(T)

A nonrecurring charge applies per Remote LAN Link termination for each physical connection to the Company's LSS network. The monthly rate is assessed per Remote LAN Link based upon the speed of the Remote LAN Link (i.e., 10 Mbps or 45 Mbps). When a customer accesses LSS via a Remote LAN Link, (C)
Transport Mileage, as set forth in D., following, applies in addition to the monthly (T)
rate for the Remote LAN Link.

D. Remote Transport Mileage (N)

Remote Transport Mileage provides for the transmission facilities between a non-LSS disclosed serving wire center associated with a customer-designated premises and the LSS network. Transport Mileage is portrayed in mileage bands. There are two elements that apply for each band, i.e., a flat rate per band and a rate per mile. Transport mileage is measured as set forth in 7.1.1, preceding. (N)

[1] Certain aspects of LAN Switching Service (LSS) have been grandfathered as of (N)
November 11, 2003, and can now be found in Section 8.99, following. (N)

8. ADVANCED COMMUNICATIONS NETWORKS

8.6 LOCAL AREA NETWORK SWITCHING SERVICE (Cont'd)

8.6.3 PRICING PLANS (T)

A. General

1. The initial order for LSS LAN Link must be for a fixed service period of one, two, three, four or five years. The initial order for a Remote LAN Link must be for a fixed service period of one, three or five years. At the end of the initial service period, a customer may elect the month-to-month option or any of the specified fixed service periods. (C) (C)

2. A subsequent order to add LSS LAN Links to an existing fixed-period service pricing plan must be for a fixed period of one, two, three, four or five years, or for the remainder of the existing fixed-period service pricing plan, provided the remainder of the existing plan is at least the minimum period for that plan. If the remaining term is less than the associated minimum period, the minimum term for the added LAN Link shall be for 12 months as set forth in 5.2.5, preceding. (C) (C) (C)

3. A customer may access LSS via a Company-provided LAN Link, Remote LAN Link, or ATM Access Link. A customer utilizing a LAN Link or a Remote LAN Link to access LSS from a non LSS service point will incur a monthly rate and a nonrecurring charge for the LAN Link or Remote LAN Link, in addition to the applicable monthly rates for Transport Mileage. (C) (C)

B. Termination Liability and Waiver Policy (T)

If a customer chooses to discontinue all or a portion of the service prior to the expiration of the fixed period service, Termination Liability and Waiver Policy, as set forth in 8.1.5, preceding, will apply. (T)

8. ADVANCED COMMUNICATIONS NETWORKS

8.6 LOCAL AREA NETWORK SWITCHING SERVICE (Cont'd)

8.6.4 RATES AND CHARGES[1]

	USOC	NONRECURRING CHARGE
A. LAN Links		
1. Nonrecurring Charge		
• Per LAN Link termination	NRBL8	$1,200.00 (R)

	USOC	MONTHLY RATE
2. 10 Mbps, without protection, per LAN Link termination		
a. AC (Alternating Current)		
• Monthly	DLUDM	$1,400.00
• 12 Months	DLUD1	1,330.00
• 24 Months	DLUD2	1,260.00
• 36 Months	DLUD3	1,190.00
• 48 Months	DLUD4	1,162.00
• 60 Months	DLUD5	1,120.00
b. DC (Direct Current)		
• Monthly	DLUEM	1,400.00
• 12 Months	DLUE1	1,330.00
• 24 Months	DLUE2	1,260.00
• 36 Months	DLUE3	1,190.00
• 48 Months	DLUE4	1,162.00
• 60 Months	DLUE5	1,120.00

(N)

[1] Certain aspects of LAN Switching Service (LSS) have been grandfathered as of November 11, 2003 and can now be found in Grandfathered Section 8.99. (N)

(M) Certain material previously found on this page can now be found in Grandfathered Section 8.99.

8. ADVANCED COMMUNICATIONS NETWORKS

8.6 LOCAL AREA NETWORK SWITCHING SERVICE
8.6.4 RATES AND CHARGES

A. LAN Links (Cont'd)

	USOC	MONTHLY RATE	(Z) (Z)
3. 10 Mbps, with protection, per LAN Link termination[1]			(S-y)
a. AC (Alternating Current)			
• Monthly	DPUDM	$1,700.00	
• 12 Months	DPUD1	1,615.00	
• 24 Months	DPUD2	1,530.00	
• 36 Months	DPUD3	1,445.00	
• 48 Months	DPUD4	1,411.00	
• 60 Months	DPUD5	1,360.00	
b. DC (Direct Current)			
• Monthly	DPUEM	1,700.00	
• 12 Months	DPUE1	1,615.00	
• 24 Months	DPUE2	1,530.00	
• 36 Months	DPUE3	1,445.00	
• 48 Months	DPUE4	1,411.00	
• 60 Months	DPUE5	1,360.00	

[1] Protection not available in non-LSS Service Points. (S-y)

(y) Reissued matter filed under Transmittal No. 175, to become effective November 11, 2003.

8. ADVANCED COMMUNICATIONS NETWORKS

8.6 LOCAL AREA NETWORK SWITCHING SERVICE
8.6.4 RATES AND CHARGES

A. LAN Links (Cont'd)

	USOC	MONTHLY RATE	
4. 45 Mbps, without protection, per LAN Link termination			(N)
a. AC (Alternating Current)			
• Monthly	DLUFM	$1,800.00	
• 12 Months	DLUF1	1,710.00	
• 24 Months	DLUF2	1,620.00	
• 36 Months	DLUF3	1,530.00	
• 48 Months	DLUF4	1,494.00	
• 60 Months	DLUF5	1,440.00	
b. DC (Direct Current)			
• Monthly	DLUGM	1,800.00	
• 12 Months	DLUG1	1,710.00	
• 24 Months	DLUG2	1,620.00	
• 36 Months	DLUG3	1,530.00	
• 48 Months	DLUG4	1,494.00	
• 60 Months	DLUG5	1,440.00	(N)

(M) Certain material formerly found on this page can now be found in Grandfathered Section 8.99.

8. ADVANCED COMMUNICATIONS NETWORKS

8.6 LOCAL AREA NETWORK SWITCHING SERVICE
8.6.4 RATES AND CHARGES

A. LAN Links (Cont'd)

	USOC	MONTHLY RATE	
5. 45 Mbps, with protection, per LAN Link termination[1]			(N)
a. AC (Alternating Current)			
• Monthly	DPUFM	$2,100.00	
• 12 Months	DPUF1	1,995.00	
• 24 Months	DPUF2	1,890.00	
• 36 Months	DPUF3	1,785.00	
• 48 Months	DPUF4	1,743.00	
• 60 Months	DPUF5	1,680.00	
b. DC (Direct Current)			
• Monthly	DPUGM	2,100.00	
• 12 Months	DPUG1	1,995.00	
• 24 Months	DPUG2	1,890.00	
• 36 Months	DPUG3	1,785.00	
• 48 Months	DPUG4	1,743.00	
• 60 Months	DPUG5	1,680.00	

[1] Protection not available in non-LSS Service Points. (N)

8. ADVANCED COMMUNICATIONS NETWORKS

8.6 LOCAL AREA NETWORK SWITCHING SERVICE
8.6.4 RATES AND CHARGES

A. LAN Links (Cont'd)

	USOC	MONTHLY RATE	
			(M)
6. 100 Mbps, without protection, per LAN Link termination			(N)
a. AC (Alternating Current)			
• Monthly	DLUHM	$2,175.00	
• 12 Months	DLUH1	2,066.25	
• 24 Months	DLUH2	1,957.50	
• 36 Months	DLUH3	1,848.75	
• 48 Months	DLUH4	1,805.25	
• 60 Months	DLUH5	1,740.00	
b. DC (Direct Current)			
• Monthly	DLUJM	2,175.00	
• 12 Months	DLUJ1	2,066.25	
• 24 Months	DLUJ2	1,957.50	
• 36 Months	DLUJ3	1,848.75	
• 48 Months	DLUJ4	1,805.25	
• 60 Months	DLUJ5	1,740.00	(N)

(M) Certain material formerly found on this page can now be found in Grandfathered Section 8.99.

8. ADVANCED COMMUNICATIONS NETWORKS

8.6 LOCAL AREA NETWORK SWITCHING SERVICE
8.6.4 RATES AND CHARGES

A. LAN Links (Cont'd)

	USOC	MONTHLY RATE
7. 100 Mbps, with protection, per LAN Link termination[1]		
a. AC (Alternating Current)		
• Monthly	DPUHM	$3,262.50
• 12 Months	DPUH1	3,099.38
• 24 Months	DPUH2	2,936.25
• 36 Months	DPUH3	2,773.13
• 48 Months	DPUH4	2,707.88
• 60 Months	DPUH5	2,610.00
b. DC (Direct Current)		
• Monthly	DPUJM	3,262.50
• 12 Months	DPUJ1	3,099.38
• 24 Months	DPUJ2	2,936.25
• 36 Months	DPUJ3	2,773.13
• 48 Months	DPUJ4	2,707.88
• 60 Months	DPUJ5	2,610.00

(N)

[1] Protection not available in non-LSS Service Points. (N)

(M) Certain material formerly found on this page can now be found in Grandfathered Section 8.99.

8. ADVANCED COMMUNICATIONS NETWORKS

8.6 LOCAL AREA NETWORK SWITCHING SERVICE
8.6.4 RATES AND CHARGES (Cont'd)

B. Transport Mileage (T)

	USOC	MONTHLY RATE	
1. Interoffice Transport for 10 Mbps or 45 Mbps LAN Link			(N)
a. Monthly			
• Fixed	JZXAM	$500.00	
• Per mile	JZXAM	62.00	
b. 12 Months			
• Fixed	JZXA1	475.00	
• Per mile	JZXA1	58.90	
c. 24 Months			
• Fixed	JZXA2	450.00	
• Per mile	JZXA2	55.80	
d. 36 Months			
• Fixed	JZXA3	425.00	
• Per mile	JZXA3	52.70	
e. 48 Months			
• Fixed	JZXA4	415.00	
• Per mile	JZXA4	51.46	
f. 60 Months			
• Fixed	JZXA5	400.00	
• Per mile	JZXA5	49.60	(N)

(M) Certain material formerly found on this page can now be found on Page 8-440 and Grandfathered Section 8.99.

8. ADVANCED COMMUNICATIONS NETWORKS

8.6 LOCAL AREA NETWORK SWITCHING SERVICE
8.6.4 RATES AND CHARGES

B. Transport Mileage(Cont'd) (T)
(M)

	USOC	MONTHLY RATE	
2. Interoffice Transport for 100 Mbps LAN Link			(N)
a. Monthly			
- Fixed	JZXBM	$940.00	
- Per mile	JZXBM	113.53	
b. 12 Months			
- Fixed	JZXB1	893.00	
- Per mile	JZXB1	107.85	
c. 24 Months			
- Fixed	JZXB2	846.00	
- Per mile	JZXB2	102.17	
d. 36 Months			
- Fixed	JZXB3	799.00	
- Per mile	JZXB3	96.50	
e. 48 Months			
- Fixed	JZXB4	780.20	
- Per mile	JZXB4	94.23	
f. 60 Months			
- Fixed	JZXB5	752.00	
- Per mile	JZXB5	90.82	(N)

(M) Certain material formerly found on this page can now be found on Page 8-441.

8. ADVANCED COMMUNICATIONS NETWORKS

8.6 LOCAL AREA NETWORK SWITCHING SERVICE
8.6.4 RATES AND CHARGES (Cont'd)

	USOC	NONRECURRING CHARGE	
			(M)
C. Remote LAN Links			(T)
1. Nonrecurring Charge			
• Per Remote LAN Link termination	NRB6E	$1,700.00	

	USOC	MONTHLY RATE	
2. 10 Mbps, per Remote LAN Link termination			(C) (C)
• Monthly	RLUCM	$1,700.00	
• 12 Months	RLUC1	1,615.00	
• 36 Months	RLUC3	1,445.00	
• 60 Months	RLUC5	1,360.00	
3. 45 Mbps, per Remote LAN Link termination			(C) (C)
• Monthly	RLU1M	2,100.00	
• 12 Months	RLU11	1,995.00	
• 36 Months	RLU13	1,785.00	
• 60 Months	RLU15	1,680.00	(M)

(M) Certain material previously found on this page can now be found on Page 8-442.

(M) Certain material found on this page formerly appeared on Page 8-438.

8. ADVANCED COMMUNICATIONS NETWORKS

8.6 LOCAL AREA NETWORK SWITCHING SERVICE
8.6.4 RATES AND CHARGES (Cont'd)

D. Remote Transport Mileage (C)(M)

	USOC	MONTHLY RATE	
1. Interoffice Transport for 10 Mbps Remote LAN Link			(C) (C)
a. Monthly			
Mileage Bands			
• Over 0 to 8			
- Fixed	JZ3OA	$369.31	
- Per mile	JZ3OA	32.04	
• Over 8 to 25			
- Fixed	JZ3OB	371.09	
- Per mile	JZ3OB	21.97	
• Over 25 to 50			
- Fixed	JZ3OC	374.06	
- Per mile	JZ3OC	31.94	
• Over 50			
- Fixed	JZ3OD	387.13	
- Per mile	JZ3OD	36.20	(M)

(M) Certain material previously found on this page can now be found on Page 8-443.

(M) Certain material found on this page formerly appeared on Page 8-439.

8. ADVANCED COMMUNICATIONS NETWORKS

8.6 LOCAL AREA NETWORK SWITCHING SERVICE
8.6.4 RATES AND CHARGES

D.1. (Cont'd) (T)(M)

	USOC	MONTHLY RATE
b. 12 Months		
Mileage Bands		
• Over 0 to 8		
- Fixed	JZ3XA	$350.85
- Per mile	JZ3XA	30.44
• Over 8 to 25		
- Fixed	JZ3XB	352.54
- Per mile	JZ3XB	20.87
• Over 25 to 50		
- Fixed	JZ3XC	355.36
- Per mile	JZ3XC	30.34
• Over 50		
- Fixed	JZ3XD	367.77
- Per mile	JZ3XD	34.39 (M)

(M) Certain material previously found on this page can now be found on Page 8-444.

(M) Certain material found on this page formerly appeared on Page 8-440.

8. ADVANCED COMMUNICATIONS NETWORKS

8.6 LOCAL AREA NETWORK SWITCHING SERVICE
8.6.4 RATES AND CHARGES

D.1. (Cont'd) (T)(M)

	USOC	MONTHLY RATE
c. 36 Months		
Mileage Bands		
• Over 0 to 8		
- Fixed	JZ3ZA	$313.92
- Per mile	JZ3ZA	27.34
• Over 8 to 25		
- Fixed	JZ3ZB	315.43
- Per mile	JZ3ZB	18.68
• Over 25 to 50		
- Fixed	JZ3ZC	317.96
- Per mile	JZ3ZC	27.26
• Over 50		
- Fixed	JZ3ZD	329.06
- Per mile	JZ3ZD	30.89 (M)

(M) Certain material previously found on this page can now be found on Page 8-445.

(M) Certain material found on this page formerly appeared on Page 8-441.

8. ADVANCED COMMUNICATIONS NETWORKS

8.6 LOCAL AREA NETWORK SWITCHING SERVICE
8.6.4 RATES AND CHARGES

D.1. (Cont'd) (T)(M)

	USOC	MONTHLY RATE
d. 60 Months		
Mileage Bands		
• Over 0 to 8		
- Fixed	JZ35A	$295.45
- Per mile	JZ35A	25.63
• Over 8 to 25		
- Fixed	JZ35B	296.88
- Per mile	JZ35B	17.58
• Over 25 to 50		
- Fixed	JZ35C	299.25
- Per mile	JZ35C	25.55
• Over 50		
- Fixed	JZ35D	309.70
- Per mile	JZ35D	28.96 (M)

(M) Certain material previously found on this page can now be found on Page 8-446.

(M) Certain material found on this page formerly appeared on Page 8-442.

8. ADVANCED COMMUNICATIONS NETWORKS

8.6 LOCAL AREA NETWORK SWITCHING SERVICE
8.6.4 RATES AND CHARGES

D. Remote Transport Mileage (Cont'd) (T)(M)

	USOC	MONTHLY RATE	
2. Interoffice Transport for 45 Mbps Remote LAN Link			(C)(C)
a. Monthly			
Mileage Bands			
• Over 0 to 8			
- Fixed	JZ36A	$590.90	
- Per mile	JZ36A	51.26	
• Over 8 to 25			
- Fixed	JZ36B	593.75	
- Per mile	JZ36B	35.15	
• Over 25 to 50			
- Fixed	JZ36C	598.50	
- Per mile	JZ36C	51.11	
• Over 50			
- Fixed	JZ36D	619.40	
- Per mile	JZ36D	57.92	(M)

(M) Certain material previously found on this page can now be found on Page 8-446.1.

(M) Certain material found on this page formerly appeared on Page 8-443.

8. ADVANCED COMMUNICATIONS NETWORKS

8.6 LOCAL AREA NETWORK SWITCHING SERVICE
8.6.4 RATES AND CHARGES

D.2. (Cont'd) (T)(M)

	USOC	MONTHLY RATE
b. 12 Months		
Mileage Bands		
• Over 0 to 8		
- Fixed	JZ37A	$561.36
- Per mile	JZ37A	48.70
• Over 8 to 25		
- Fixed	JZ37B	564.06
- Per mile	JZ37B	33.39
• Over 25 to 50		
- Fixed	JZ37C	568.58
- Per mile	JZ37C	48.55
• Over 50		
- Fixed	JZ37D	588.43
- Per mile	JZ37D	55.02 (M)

(M) Certain material previously found on this page can now be found on Page 8-446.2.

(M) Certain material found on this page formerly appeared on Page 8-444.

8. ADVANCED COMMUNICATIONS NETWORKS

8.6 LOCAL AREA NETWORK SWITCHING SERVICE
8.6.4 RATES AND CHARGES

D.2. (Cont'd) (T)(M)

	USOC	MONTHLY RATE
c. 36 Months		
Mileage Bands		
• Over 0 to 8		
- Fixed	JZ38A	$502.27
- Per mile	JZ38A	43.74
• Over 8 to 25		
- Fixed	JZ38B	504.69
- Per mile	JZ38B	29.88
• Over 25 to 50		
- Fixed	JZ38C	508.73
- Per mile	JZ38C	43.61
• Over 50		
- Fixed	JZ38D	526.49
- Per mile	JZ38D	49.42 (M)

(M) Certain material found on this page formerly appeared on Page 8-445.

8. ADVANCED COMMUNICATIONS NETWORKS

8.6 LOCAL AREA NETWORK SWITCHING SERVICE
8.6.4 RATES AND CHARGES

D.2. (Cont'd) (T)(M)

	USOC	MONTHLY RATE	
d. 60 Months			(T)
Mileage Bands			
• Over 0 to 8			
- Fixed	JZ39A	$472.72	
- Per mile	JZ39A	41.00	
• Over 8 to 25			
- Fixed	JZ39B	475.00	
- Per mile	JZ39B	28.12	
• Over 25 to 50			
- Fixed	JZ39C	478.80	
- Per mile	JZ39C	40.88	
• Over 50			
- Fixed	JZ39D	495.52	
- Per mile	JZ39D	46.33	(M)

(M) Certain material found on this page formerly appeared on Page 8-446.

8. ADVANCED COMMUNICATIONS NETWORKS

8.7 MODEM AGGREGATION SERVICE (MAS)

8.7.1 GENERAL

A. Description

Effective May 1, 2001, Modem Aggregation Service (MAS) is limited to existing customers only. After that date no new or existing customer requests will be taken. All Pricing Plan customers may retain their service until the expiration of their term.

The Company's Modem Aggregation Service (MAS) enables customers to subscribe to the use of modems located within designated Company local calling areas.

MAS shall not be used to provide originating switched voice traffic using internet technologies. When the Company determines that the service is being used to originate switched voice traffic, the customer will be given 30 days to discontinue the unauthorized use. During this 30-day period the customer will be given the option to purchase an applicable switched access product. Failure to discontinue the aforementioned use of MAS will result in its disconnection and in the application of appropriate TLA charges.

For a given local calling area, the service provides to the MAS customer a dial-in phone number and a customer-specified number of MAS ports. The end users of a MAS customer can place any combination of modem (analog) calls and/or ISDN (digital) calls to the assigned MAS phone number within the local calling area, up to and including the subscribed-to number of MAS ports. End-user calls in excess of the subscribed number of MAS ports will receive a subscriber busy signal.

Once the call is connected, the end-user PPP (Point to Point Protocol) traffic is delivered to the MAS customer location over a L2TP (Layer 2 Tunneling Protocol) tunnel using standard Frame Relay Service or ATM Service where these services are available. End user traffic from multiple Company local calling areas can be aggregated onto a single Frame Relay or ATM PVC (Permanent Virtual Circuit). (T)

8. ADVANCED COMMUNICATIONS NETWORKS

8.7 MODEM AGGREGATION SERVICE (MAS)

8.7.1 GENERAL

A. Description (Cont'd)

MAS requires the use of customer provided equipment L2TP Network Service (LNS) located at the customer's premise to interface with the end user modem traffic that is delivered over the Frame Relay Service or ATM Service to the customer premise. The customer must purchase either Frame Relay Service or ATM Service in order to connect their network to the Central Office based MAS modems. Availability of MAS is limited to those wire centers where MAS and Frame Relay Service or ATM Service is available. The locations designated by the Company are listed in the National Exchange Carrier Association Tariff FCC No. 4. (T) (T) (T)

MAS does not guarantee or warranty the speed or success rate which end users will realize when attempting to connect to the service. Connect speeds and connection success rates vary widely across end user local loops and equipment.

The customer must purchase and install equipment at their premise in order to terminate the end user calls and route them to their end destination. Technical Specifications for MAS are delineated in Qwest Corporation Technical Publication PUB 77402.

MAS customers will receive graphical daily usage reports delivered via e-mail to one e-mail address specified by the customer of record.

8. ADVANCED COMMUNICATIONS NETWORKS

8.7 MODEM AGGREGATION SERVICE (MAS) (Cont'd)

8.7.2 RATE ELEMENTS

A. MAS Recurring Charges

A monthly rate will be applied based on the number of modems to which the customer subscribes. MAS modems are available in blocks of 10. The charges do not include the Frame Relay Service or ATM Service access link, port charges, or (T)
bandwidth. Frame Relay or ATM Services are purchased as set forth in Section 8, (T)
preceding.

B. MAS Nonrecurring Charges

A nonrecurring telephone number charge applies per telephone number when the customer changes their existing telephone number or orders a new MAS telephone number. An order change charge initial or subsequent applies per service order. Changes are only allowed in increments of 10.

8. ADVANCED COMMUNICATIONS NETWORKS

8.7 MODEM AGGREGATION SERVICE (MAS)

8.7.3 PRICING PLANS

Effective May 1, 2001, Modem Aggregation Service (MAS) is limited to existing customers only. After that date no new customer requests will be taken. All Pricing Plan customers may retain their service until the expiration of their term. On December 6, 2000 Pricing Plans of 36 and 60 months were Grandfathered to existing customers. Minimum Service Periods and Termination Liability apply. (C)

MAS may be ordered at the customer's option on a month-to-month basis or under a Fixed Period Service Rate Plan of 12 months. The optional rate plans give the MAS customer the assurance of no Company-initiated increases in rates during the fixed period. The minimum service period for Fixed Period Service Rate is 12 months as set forth in Section 5, preceding.

When customers with Intrastate MAS existing prior to April 4, 2000 migrate to the MAS offered in this Tariff at the same address of record a nonrecurring charge will not apply and applicable TLA will be waived.

8. ADVANCED COMMUNICATIONS NETWORKS

8.7 MODEM AGGREGATION SERVICE (MAS) (Cont'd)

8.7.4 RATES AND CHARGES

This service is Grandfathered as set forth in 8.7.1, preceding. (C)

A. MAS Recurring Charges

	USOC	MONTHLY RATE
1. 1 to 20 Blocks, per Block		
• Monthly	MBLB2	$650.00
• 12 Months	MBLB2	450.00
• 36 Months	MBLB2	430.00
• 60 Months	MBLB2	400.00
2. 21 to 200 Blocks, per Block		
• Monthly	MBLB2	600.00
• 12 Months	MBLB2	430.00
• 36 Months	MBLB2	400.00
• 60 Months	MBLB2	380.00
3. 201 Blocks and Above, per Block		
• Monthly	MBLB2	550.00
• 12 Months	MBLB2	360.00
• 36 Months	MBLB2	340.00
• 60 Months	MBLB2	320.00

8. ADVANCED COMMUNICATIONS NETWORKS

8.7 MODEM AGGREGATION SERVICE (MAS) (T)(M)
8.7.4 RATES AND CHARGES (Cont'd) (T)

	USOC	NONRECURRING CHARGE	
B. MAS Nonrecurring Charges,			(T)
1. MAS Telephone Number Charge, per telephone number	REALC	$200.00	
2. MAS order charge, initial and subsequent, per service order	REALP	40.00	(T) (M)

Certain material on this page formerly appeared on Page 8-310.

8. ADVANCED COMMUNICATIONS NETWORKS

8.8 METRO OPTICAL ETHERNET (MOE)

8.8.1 GENERAL

A. Description

Metro Optical Ethernet (MOE) Service is a flexible, easy-to-use, transport service that uses established Ethernet transport technology. MOE allows customers to connect multiple enterprise locations within a service area using native Ethernet protocol. MOE supports transmission speeds as low as 5 Mbps and up to 1 Gbps in increments of 10 Mbps from 10 to 100 Mbps and 100 Mbps from 100 to 1,000 Mbps.

(D)

A customer may request that the facilities used to provide MOE be specially routed. The regulations, rates and charges for Special Facilities Routing (i.e., Diversity) are as set forth in Section 11, following.

Technical Specifications for MOE Service are delineated in Qwest Corporation Technical Publication PUB 77411.

8. ADVANCED COMMUNICATIONS NETWORKS

8.8 METRO OPTICAL ETHERNET (MOE)
8.8.1 GENERAL (cont'd)

B. Service Elements

1. Network Interface (NI)

   The Company network interface is the point of interconnection between Company communications facilities and terminal equipment or other customer-provided facilities. The network interface is the point of demarcation on the customer's premises where the Company's responsibility for the provision of MOE Service ends.

   Technical Specifications for MOE Service are delineated in Qwest Corporation Technical Publication PUB 77411.

2. Access Link

   A MOE Access Link connects a customer facility at the NI to an Ethernet port on the MOE network with a standard optical or copper connection.

3. MOE Port

   MOE Port is an Ethernet port that is the physical entry point to the shared Metro Optical Ethernet Network. Virtual Local Area Networks (VLANs), originate and terminate on a MOE Port. Customers may choose to connect to an electrical 10/100 port or an electrical or optical 1,000 Mbps port on the Company network.

4. Bandwidth Profile

   The Bandwidth Profile is bandwidth provisioned over the MOE Port.

   - 10 Mbps Ports: 5 Mbps and 10 Mbps (C)
   - 100 Mbps Ports: 10 Mbps, 20 Mbps, 30 Mbps, 40 Mbps, 50 Mbps, 60 Mbps, 70 Mbps, 80 Mbps, 90 Mbps and 100 Mbps (C)
   - 1,000 Mbps Ports: 100 Mbps, 200 Mbps, 300 Mbps, 400 Mbps, 500 Mbps, 600 Mbps, 700 Mbps, 800 Mbps, 900 Mbps and 1,000 Mbps

8. ADVANCED COMMUNICATIONS NETWORKS

8.8 METRO OPTICAL ETHERNET (MOE) (Cont'd)

8.8.2 RATE ELEMENTS

A. MOE Port

A nonrecurring charge applies per new MOE Port. A nonrecurring charge for a MOE Port will also be assessed when an electrical port is changing to an optical port or an optical port is changing to an electrical port. Exception: there will be no charge if a customer goes from one electrical port to another electrical port or from one optical port to another optical port. Customers may choose to connect to an electrical 10/100 port or an electrical or optical 1,000 Mbps port on the Company network.

B. Bandwidth Profile

A monthly rate is assessed per Bandwidth Profile subscribed to and the term plan chosen. Customers may subscribe to one of the following:

- 10 Mbps Ports: 5 Mbps and 10 Mbps (C)
- 100 Mbps Ports: 5 Mbps, 10 Mbps, 20 Mbps, 30 Mbps, 40 Mbps, 50 Mbps, 60 Mbps, 70 Mbps, 80 Mbps, 90 Mbps and 100 Mbps (C)
- 1,000 Mbps Ports: 100 Mbps, 200 Mbps, 300 Mbps, 400 Mbps, 500 Mbps, 600 Mbps, 700 Mbps, 800 Mbps, 900 Mbps and 1,000 Mbps

8. ADVANCED COMMUNICATIONS NETWORKS

8.8 METRO OPTICAL ETHERNET (MOE)

8.8.3 PRICING PLANS

A. General

1. The initial order for MOE must be for a fixed period service rate plan of 12-, 36- or 60-months. The rate plan allows MOE customers the assurance of no Company-initiated increases in rates during the fixed period, but MOE customers will not receive rate decreases if the Company decreases the rates during their term plan. At the end of the initial service period, a customer may elect the month-to-month option or any of the specified fixed service periods. Should the customer fail to make a choice by the end of a fixed period, the service will automatically revert to the effective monthly (month-to-month) rates.

2. A subsequent order to add a MOE Port to an existing fixed-period service pricing plan must be for the remainder of the existing fixed-period service pricing plan, provided the remainder of the existing plan is at least the minimum period for that plan, as set forth in 5.2.5, preceding.

3. A subsequent order to add or change a MOE Port during the fixed period service rate plan will be assessed the nonrecurring charge.

4. A subsequent order to increase a MOE Bandwidth during the fixed period service rate plan will not be assessed the MOE Port nonrecurring charge. The monthly rate will be changed to the new MOE Bandwidth Profile Charge. The customer may subsequently decrease the MOE Bandwidth Profile as low as the originally configured bandwidth without being assessed Termination Liability (TLA). If the customer chooses to decrease MOE Bandwidth to a lower bandwidth than originally agreed to prior to the expiration date of the fixed period service rate plan TLA will apply. (C) (C) (C) (T)

B. Termination Liability and Waiver

1. If the customer chooses to terminate all of their MOE services prior to the expiration date of the fixed period rate plan, Termination Liability and Waiver will apply, as set forth in 8.1.5 preceding.

2. If the customer chooses to terminate one or more MOE Ports or Bandwidth Profiles prior to the expiration date of the fixed period rate plan, Termination Liability and Waiver will apply, as set forth in 8.1.5 preceding. (C) (C)

3. If the customer chooses to decrease MOE Bandwidth lower than the originally configured bandwidth prior to the expiration date of the fixed period rate plan, Termination Liability and Waiver will apply, as set forth in 8.1.5 preceding . (C) (C)

8. ADVANCED COMMUNICATIONS NETWORKS

8.8 METRO OPTICAL ETHERNET (MOE)
8.8.3 PRICING PLANS (CONT'D)

C. Changes to Rate Plans

Services rated under the month-to-month plan or an existing fixed period service rate plan may be upgraded to a new fixed period service rate plan at any time the customer chooses without incurring nonrecurring charges or Termination Liability. This upgrade will be allowed provided the channel interface and the customer designated premises remain the same. Additionally, the new fixed period service rate plan must meet or exceed the fixed period service rate plan being upgraded. (T)
The monthly rates will be those in effect at the time the new fixed period begins. New minimum service periods apply to upgrades in rate plans.

If a customer chooses to change an existing service provided under a fixed period service rate plan to a month-to-month plan, the change will be treated as a discontinuance of the existing service and an establishment of new service.

Appropriate Termination Liability, as set forth in 8.1.5, and a new minimum period will apply in addition to the new monthly rates for the service. (T)

8. ADVANCED COMMUNICATIONS NETWORKS

8.8 METRO OPTICAL ETHERNET (MOE)

8.8.4 RATES AND CHARGES

A. MOE Port

	USOC	NONRECURRING CHARGE	
1. 10/100 Mbps, Per MOE Port			
• Monthly	PO4SX	$ 600.00 (R)	
• 12 Months	PO4S1	600.00 (R)	
- Vintage			(N)
11/19/03 through 9/16/04		1,200.00	(N)
• 36 Months	PO4S3	600.00 (R)	
- Vintage			(N)
11/19/03 through 9/16/04		1,200.00	(N)
• 60 Months	PO4S5	600.00 (R)	
- Vintage			(N)
11/19/03 through 9/16/04		1,200.00	(N)
2. 1,000 Mbps, Per MOE Port			
• Monthly	PO4UX	1,200.00	
• 12 Months	PO4U1	1,200.00	
• 36 Months	PO4U3	1,200.00	
• 60 Months	PO4U5	1,200.00	

8. ADVANCED COMMUNICATIONS NETWORKS

8.8 METRO OPTICAL ETHERNET (MOE)
8.8.4 RATES AND CHARGES (Cont'd)

B. MOE Bandwidth Profile for 10/100 Mbps Ports

	USOC	MONTHLY RATE	
1. 5 Bandwidth, Per 10/100 Mbps Port			
• Monthly	BP4AX	$ 800.00	
• 12 Months	BP4A1	760.00	
• 36 Months	BP4A3	680.00	
• 60 Months	BP4A5	640.00	
2. 10 Bandwidth, Per 10/100 Mbps Port			
• Monthly	BP4BX	900.00	
• 12 Months	BP4B1	855.00	
• 36 Months	BP4B3	765.00	
• 60 Months	BP4B5	720.00	
3. 20 Bandwidth, Per 10/100 Mbps Port			
• Monthly	BP4CX	967.00 (R)	
• 12 Months	BP4C1	918.70 (R)	
- Vintage			(N)
11/19/03 through 9/16/04		1,003.20	(N)
• 36 Months	BP4C3	822.00 (R)	
- Vintage			(N)
11/19/03 through 9/16/04		897.60	(N)
• 60 Months	BP4C5	773.60 (R)	
- Vintage			(N)
11/19/03 through 9/16/04		844.80	(N)

8. ADVANCED COMMUNICATIONS NETWORKS

8.8 METRO OPTICAL ETHERNET (MOE)
8.8.4 RATES AND CHARGES

B. MOE Bandwidth Profile for 10/100 Mbps Ports (Cont'd)

	USOC	MONTHLY RATE	
4. 30 Bandwidth, Per 10/100 Mbps Port			
• Monthly	BP4DX	$1,034.00 (R)	
• 12 Months	BP4D1	982.30 (R)	
- Vintage			(N)
11/19/03 through 9/16/04		1,151.40	(N)
• 36 Months	BP4D3	878.90 (R)	
- Vintage			(N)
11/19/03 through 9/16/04		1,030.20	(N)
• 60 Months	BP4D5	827.20 (R)	
- Vintage			(N)
11/19/03 through 9/16/04		969.60	(N)
5 40 Bandwidth, Per 10/100 Mbps Port			
• Monthly	BP4EX	1,101.00 (R)	
• 12 Months	BP4E1	1,046.00 (R)	
- Vintage			(N)
11/19/03 through 9/16/04		1,299.60	(N)
• 36 Months	BP4E3	935.90 (R)	
- Vintage			(N)
11/19/03 through 9/16/04		1,162.80	(N)
• 60 Months	BP4E5	880.80 (R)	
- Vintage			(N)
11/19/03 through 9/16/04		1,094.40	(N)

(M) Certain material previously found on this page can now be found on Page 8-452.8.1.

8. ADVANCED COMMUNICATIONS NETWORKS

8.8 METRO OPTICAL ETHERNET (MOE)
8.8.4 RATES AND CHARGES

B. MOE Bandwidth Profile for 10/100 Mbps Ports (Cont'd)

	USOC	MONTHLY RATE	
6. 50 Bandwidth, Per 10/100 Mbps Port			(M)
• Monthly	BP4FX	1,168.00 (R)	
• 12 Months	BP4F1	1,109.60 (R)	(M)
- Vintage			(N)
11/19/03 through 9/16/04		1,447.80	(N)
• 36 Months	BP4F3	992.80 (R)	(M)
- Vintage			(N)
11/19/03 through 9/16/04		1,295.40	(N)
• 60 Months	BP4F5	934.40 (R)	(M)
- Vintage			(N)
11/19/03 through 9/16/04		1,219.20	(N)
7. 60 Bandwidth, Per 10/100 Mbps Port			(M)
• Monthly	BP4GX	1,235.00 (R)	
• 12 Months	BP4G1	1,173.30 (R)	(M)
- Vintage			(N)
11/19/03 through 9/16/04		1,596.00	(N)
• 36 Months	BP4G3	1,049.80 (R)	
- Vintage			(N)
11/19/03 through 9/16/04		1,428.00	(N)
• 60 Months	BP4G5	988.00 (R)	
- Vintage			(N)
11/19/03 through 9/16/04		1,344.00	(N)

(M) Certain material on this page formerly appeared on Page 8-452.8.

8. ADVANCED COMMUNICATIONS NETWORKS

8.8 METRO OPTICAL ETHERNET (MOE)
8.8.4 RATES AND CHARGES

B. MOE Bandwidth Profile for 10/100 Mbps Ports (Cont'd)

	USOC	MONTHLY RATE	
8. 70 Bandwidth, Per 10/100 Mbps Port			
• Monthly	BP4HX	$1,302.00 (R)	
• 12 Months	BP4H1	1,236.90 (R)	
- Vintage			(N)
11/19/03 through 9/16/04		1,744.20	(N)
• 36 Months	BP4H3	1,106.70 (R)	
- Vintage			(N)
11/19/03 through 9/16/04		1,560.60	(N)
• 60 Months	BP4H5	1,041.60 (R)	
- Vintage			(N)
11/19/03 through 9/16/04		1,468.80	(N)
9. 80 Bandwidth, Per 10/100 Mbps Port			
• Monthly	BP4JX	1,369.00 (R)	
• 12 Months	BP4J1	1,300.60 (R)	
- Vintage			(N)
11/19/03 through 9/16/04		1,892.40	(N)
• 36 Months	BP4J3	1,163.70 (R)	
- Vintage			(N)
11/19/03 through 9/16/04		1,693.20	(N)
• 60 Months	BP4J5	1,095.20 (R)	
- Vintage			(N)
11/19/03 through 9/16/04		1,593.60	(N)

(M) Certain material previously found on this page can now be found on Page 8-452.9.1.

8. ADVANCED COMMUNICATIONS NETWORKS

8.8 METRO OPTICAL ETHERNET (MOE)
8.8.4 RATES AND CHARGES

B. MOE Bandwidth Profile for 10/100 Mbps Ports (Cont'd)

	USOC	MONTHLY RATE	
10. 90 Bandwidth, Per 10/100 Mbps Port			(M)
• Monthly	BP4KX	1,436.00 (R)	
• 12 Months	BP4K1	1,364.20 (R)	(M)
- Vintage			(N)
11/19/03 through 9/16/04		2,040.60	(N)
• 36 Months	BP4K3	1,220.60 (R)	(M)
- Vintage			(N)
11/19/03 through 9/16/04		1,825.80	(N)
• 60 Months	BP4K5	1,148.80 (R)	(M)
- Vintage			(N)
11/19/03 through 9/16/04		1,718.40	(N)
11. 100 Bandwidth, Per 10/100 Mbps Port			(M)
• Monthly	BP4LX	1,500.00 (R)	
• 12 Months	BP4L1	1,425.00 (R)	(M)
- Vintage			(N)
11/19/03 through 9/16/04		2,185.00	(N)
• 36 Months	BP4L3	1,275.00 (R)	(M)
- Vintage			(N)
11/19/03 through 9/16/04		1,955.00	(N)
• 60 Months	BP4L5	1,200.00 (R)	(M)
- Vintage			(N)
11/19/03 through 9/16/04		1,840.00	(N)

(M) Certain material on this page formerly appeared on Page 8-452.9.

8. ADVANCED COMMUNICATIONS NETWORKS

8.8 METRO OPTICAL ETHERNET (MOE)
8.8.4 RATES AND CHARGES (Cont'd)

C. MOE Bandwidth Profile for 1,000 Mbps Ports

	USOC	MONTHLY RATE	
1. 100 Bandwidth, Per 1,000 Mbps Ports			
• Monthly	BP4LX	$1,500.00 (R)	
• 12 Months	BP4L1	1,425.00(R)	
- Vintage			(N)
11/19/03 through 9/16/04		2,185.00	(N)
• 36 Months	BP4L3	1,275.00 (R)	
- Vintage			(N)
11/19/03 through 9/16/04		1,955.00	(N)
• 60 Months	BP4L5	1,200.00 (R)	
- Vintage			(N)
11/19/03 through 9/16/04		1,840.00	(N)
2. 200 Bandwidth, Per 1,000 Mbps Ports			
• Monthly	BP4MX	2,089.00 (R)	
• 12 Months	BP4M1	1,984.60 (R)	
- Vintage			(N)
11/19/03 through 9/16/04		3,209.10	(N)
• 36 Months	BP4M3	1,775.70 (R)	
- Vintage			(N)
11/19/03 through 9/16/04		2,871.30	(N)
• 60 Months	BP4M5	1,671.20 (R)	
- Vintage			(N)
11/19/03 through 9/16/04		2,702.40	(N)

(M) Certain material previously found on this page can now be found on Page 8-452.10.1.

8. ADVANCED COMMUNICATIONS NETWORKS

8.8 METRO OPTICAL ETHERNET (MOE)
8.8.4 RATES AND CHARGES

C. MOE Bandwidth Profile for 1,000 Mbps Ports(Cont'd)

	USOC	MONTHLY RATE	
3. 300 Bandwidth, Per 1,000 Mbps Ports			(M)
• Monthly	BP4NX	2,678.00 (R)	
• 12 Months	BP4N1	2,544.10 (R)	(M)
- Vintage			(N)
11/19/03 through 9/16/04		4,233.20	(N)
• 36 Months	BP4N3	2,276.30 (R)	(M)
- Vintage			(N)
11/19/03 through 9/16/04		3,787.60	(N)
• 60 Months	BP4N5	2,142.40 (R)	(M)
- Vintage			(N)
11/19/03 through 9/16/04		3,564.80	(N)

(M) Certain material on this page formerly appeared on Page 8-452.10.

8. ADVANCED COMMUNICATIONS NETWORKS

8.8 METRO OPTICAL ETHERNET (MOE)
8.8.4 RATES AND CHARGES

C. MOE Bandwidth Profile for 1,000 Mbps Ports (Cont'd)

	USOC	MONTHLY RATE	
4. 400 Bandwidth, Per 1,000 Mbps Ports			
• Monthly	BP4OX	$3,267.00 (R)	
• 12 Months	BP4O1	3,103.70 (R)	
- Vintage			(N)
11/19/03 through 9/16/04		5,257.30	(N)
• 36 Months	BP4O3	2,777.00 (R)	
- Vintage			(N)
11/19/03 through 9/16/04		4,703.90	(N)
• 60 Months	BP4O5	2,613.60 (R)	
- Vintage			(N)
11/19/03 through 9/16/04		4,427.20	(N)
5. 500 Bandwidth, Per 1,000 Mbps Ports			
• Monthly	BP4PX	3,856.00 (R)	
• 12 Months	BP4P1	3,663.20 (R)	
- Vintage			(N)
11/19/03 through 9/16/04		6,281.40	(N)
• 36 Months	BP4P3	3,277.60 (R)	
- Vintage			(N)
11/19/03 through 9/16/04		5,620.20	(N)
• 60 Months	BP4P5	3,084.80 (R)	
- Vintage			(N)
11/19/03 through 9/16/04		5,289.60	(N)

(M) Certain material previously found on this page can now be found on Page 8-452.11.1.

8. ADVANCED COMMUNICATIONS NETWORKS

8.8 METRO OPTICAL ETHERNET (MOE)
8.8.4 RATES AND CHARGES

C. MOE Bandwidth Profile for 1,000 Mbps Ports (Cont'd)

	USOC	MONTHLY RATE	
6. 600 Bandwidth, Per 1,000 Mbps Ports			(M)
• Monthly	BP4QX	4,445.00 (R)	
• 12 Months	BP4Q1	4,222.80 (R)	(M)
- Vintage			(N)
11/19/03 through 9/16/04		7,305.50	(N)
• 36 Months	BP4Q3	3,778.30 (R)	(M)
- Vintage			(N)
11/19/03 through 9/16/04		6,536.50	(N)
• 60 Months	BP4Q5	3,556.00 (R)	(M)
- Vintage			(N)
11/19/03 through 9/16/04		6,152.00	(N)
7. 700 Bandwidth, Per 1,000 Mbps Ports			(M)
• Monthly	BP4RX	5,034.00 (R)	
• 12 Months	BP4R1	4,782.30 (R)	(M)
- Vintage			(N)
11/19/03 through 9/16/04		8,329.60	(N)
• 36 Months	BP4R3	4,278.90 (R)	(M)
- Vintage			(N)
11/19/03 through 9/16/04		7,452.80	(N)
• 60 Months	BP4R5	4,027.20 (R)	(M)
- Vintage			(N)
11/19/03 through 9/16/04		7,014.40	(N)

(M) Certain material on this page formerly appeared on Page 8-452.11.

8. ADVANCED COMMUNICATIONS NETWORKS

8.8 METRO OPTICAL ETHERNET (MOE)
8.8.4 RATES AND CHARGES

C. MOE Bandwidth Profile for 1,000 Mbps Ports (Cont'd)

	USOC	MONTHLY RATE	
8. 800 Bandwidth, Per 1,000 Mbps Ports			
• Monthly	BP4SX	$ 5,623.00 (R)	
• 12 Months	BP4S1	5,341.90 (R)	
- Vintage			(N)
11/19/03 through 9/16/04		9,353.70	(N)
• 36 Months	BP4S3	4,779.60 (R)	
- Vintage			(N)
11/19/03 through 9/16/04		8,369.10	(N)
• 60 Months	BP4S5	4,498.40 (R)	
- Vintage			(N)
11/19/03 through 9/16/04		7,876.80	(N)
9. 900 Bandwidth, Per 1,000 Mbps Ports			
• Monthly	BP4TX	6,212.00 (R)	
• 12 Months	BP4T1	5,901.40 (R)	
- Vintage			(N)
11/19/03 through 9/16/04		10,377.80	(N)
• 36 Months	BP4T3	5,280.20 (R)	
- Vintage			(N)
11/19/03 through 9/16/04		9,285.40	(N)
• 60 Months	BP4T5	4,969.60 (R)	
- Vintage			(N)
11/19/03 through 9/16/04		8,739.20	(N)

(M) Certain material previously found on this page can now be found on Page 8-452.12.1.

8. ADVANCED COMMUNICATIONS NETWORKS

8.8 METRO OPTICAL ETHERNET (MOE)
8.8.4 RATES AND CHARGES

C. MOE Bandwidth Profile for 1,000 Mbps Ports (Cont'd)

	USOC	MONTHLY RATE	
10. 1,000 Bandwidth, Per 1,000 Mbps Ports			(M)
• Monthly	BP4UX	6,800.00 (R)	
• 12 Months	BP4U1	6,460.00 (R)	(M)
- Vintage			(N)
11/19/03 through 9/16/04		11,400.00	(N)
• 36 Months	BP4U3	5,780.00 (R)	(M)
- Vintage			(N)
11/19/03 through 9/16/04		10,200.00	(N)
• 60 Months	BP4U5	5,440.00 (R)	(M)
- Vintage			(N)
11/19/03 through 9/16/04		9,600.00	(N)

(M) Certain material on this page formerly appeared on Page 8-452.12.

8. ADVANCED COMMUNICATIONS NETWORKS

8.99 GRANDFATHERED ADVANCED COMMUNICATIONS NETWORKS SERVICES (N)

General

The services, offerings, and regulations specified in this Section are Grandfathered. Existing customers may keep the service until the expiration of the term plan that originated prior to the Grandfather date, or until the end date of the offering. Dates are specified as appropriate. (N)

8. ADVANCED COMMUNICATIONS NETWORKS

8.99 GRANDFATHERED ADVANCED COMMUNICATIONS NETWORKS SERVICES (Cont'd) (N)

8.99.1 LOCAL AREA NETWORK SWITCHING SERVICE

A. General

The services, offerings, and regulations specified in this Section are Grandfathered as of November 11, 2003, unless otherwise indicated.

B. Service Limitations (Unless otherwise indicated)

- Existing Service and Locations
  - May retain service as it is
  - May renew Fixed Period Service Rate Plans for 12, 36 or 60 months, stay Monthly, move to Monthly, or move from Monthly to any Fixed Period Service Rate Plan
  - May upgrade to a higher speeds LAN Link(s) or go from an unprotected to a protected LAN Link
  - May elect to migrate to the LAN Switching Service (LSS) found in Section 8.6, preceding, and the nonrecurring charges and TLA will be waived
- New Service and Locations
  - New Service must be ordered out of Section 8.6, preceding
  - New locations added to existing service must be ordered out of Section 8.6 and set up on separate Term Plan (N)

8. ADVANCED COMMUNICATIONS NETWORKS

8.99 GRANDFATHERED ADVANCED COMMUNICATIONS NETWORKS SERVICES
8.99.1 LOCAL AREA NETWORK SWITCHING SERVICE (Cont'd)

B. Rates and Charges (M)

1. LAN Links

	USOC	MONTHLY RATE
a. Ethernet, 10 Mbps, without protection, per LAN Link termination		
• Monthly	D5LCX	$1,400.00
• 12 Months	DLUC1	1,330.00
• 36 Months	DLUC3	1,190.00
• 60 Months	DLUC5	1,120.00
b. Ethernet, 10 Mbps, with protection, per LAN Link termination		
• Monthly	D5LCP	1,700.00
• 12 Months	DPUC1	1,615.00
• 36 Months	DPUC3	1,445.00
• 60 Months	DPUC5	1,360.00
c. Fast Ethernet, 45 Mbps, without protection, per LAN Link termination		
• Monthly	D5L1X	$1,800.00
• 12 Months	DLU11	1,710.00
• 36 Months	DLU13	1,530.00
• 60 Months	DLU15	1,440.00
d. Fast Ethernet, 45 Mbps, with protection, per LAN Link termination		
• Monthly	D5L1P	2,100.00
• 12 Months	DPU11	1,995.00
• 36 Months	DPU13	1,785.00
• 60 Months	DPU15	1,680.00

(M)

(M) Certain material on this page formerly appeared on Pages 8-434 and 8-435.

8. ADVANCED COMMUNICATIONS NETWORKS

8.99 GRANDFATHERED ADVANCED COMMUNICATIONS NETWORKS SERVICES
8.99.1 LOCAL AREA NETWORK SWITCHING SERVICE

B.1. (Cont'd) (T)

	USOC	MONTHLY RATE
e. Fast Ethernet, 100 Mbps, without protection, per LAN Link termination		
• Monthly	D5L2X	$2,800.00
• 12 Months	DLU21	2,660.00
• 36 Months	DLU23	2,380.00
• 60 Months	DLU25	2,240.00
f. Fast Ethernet, 100 Mbps, with protection, per LAN Link termination		
• Monthly	D5L2P	3,900.00
• 12 Months	DPU21	3,700.00
• 36 Months	DPU23	3,300.00
• 60 Months	DPU25	3,120.00
g. Token Ring, 16 Mbps, without protection, [1] per LAN Link termination		
• Monthly	D5LBX	1,400.00
• 12 Months	DLUB1	1,330.00
• 36 Months	DLUB3	1,190.00
• 60 Months	DLUB5	1,120.00
h. Token Ring, 16 Mbps, with protection, [1] per LAN Link termination		
• Monthly	D5LBP	1,700.00
• 12 Months	DPUB1	1,615.00
• 36 Months	DPUB3	1,445.00
• 60 Months	DPUB5	1,360.00

(M)

[1] Effective December 14, 2001, Token Ring, 16 Mbps will no longer be available to new customers or for renewal by existing customers. (M)

(M) Certain material on this page formerly appeared on Pages 8-436 and 8-437.

8. ADVANCED COMMUNICATIONS NETWORKS

8.99 GRANDFATHERED ADVANCED COMMUNICATIONS NETWORKS SERVICES
8.99.1 LOCAL AREA NETWORK SWITCHING SERVICE

B. Rates and Charges (Cont'd)

2. Remote LAN Links (M)

	USOC	MONTHLY RATE
a. Token Ring, 16 Mbps, [1] per Remote LAN Link termination		
• Monthly	RLUBM	$1,700.00
• 12 Months	RLUB1	1,615.00
• 36 Months	RLUB3	1,445.00
• 60 Months	RLUB5	1,360.00

[1] Effective December 14, 2001, Token Ring, 16 Mbps will no longer be available to new customers or for renewal by existing customers. (M)

(M) Certain material on this page formerly appeared on Page 8-438.