ACCESS SERVICE

		Page No.	
6.	SWITCHED ACCESS SERVICE	6-3	
6.1	General	6-3	
6.1.1	Switched Access Service Arrangements and Manner of Provision	6-4	
6.1.2	Rate Categories	6-12	
6.1.3	Special Facilities Routing	6-26	
6.1.4	Design Layout Report	6-26	
6.1.5	Testing	6-26	
6.1.6	Order Options and Conditions	6-27	
6.1.7	CCSAC Testing Requirements	6-27	
6.2	Provision and Description of Switched Access Service	6-28	
6.2.1	Access Line Arrangement (ALA) and Feature Group A (FGA)	6-29	
6.2.2	Access Trunk Arrangement 950 (ATA950) and Feature Group B (FGB)	6-36	
6.2.3	Access Trunk Arrangement Non Equal Access (ATANEA) and Feature Group C (FGC)	6-42	
6.2.4	Access Trunk Arrangement 10XXX (ATAXXX) and Feature Group D (FGD)	6-50	
6.2.5	500, 900 and Toll Free Access Service	6-58	
6.2.6	Network Access Services	6-64	
6.3	Local Switching Optional Features and BSEs	6-67	
6.3.1	Common Switching	6-67	
6.3.2	Transport Termination	6-85	
6.3.3	WATS Access Line Termination	6-88	
6.4	Transmission Specifications	6-92	
6.5	Obligations of the Telephone Company	6-93	
6.5.1	Network Management	6-93	
6.5.2	Design and Traffic Routing of Switched Access Service	6-94	
6.5.3	Provision of Service Performance Data	6-95	
6.5.4	Trunk Group Measurement Reports	6-95	
6.5.5	Determination of Number of Transmission Paths	6-96	
6.5.6	Determination of Number of End Office Transport Terminations	6-97	
6.5.7	Design Blocking Probability	6-97	(N)

(This page filed under Transmittal No. 1)

		Page No.	
6. SWITCHED ACCESS SERVICE (Cont'd)			
6.6 Obligations of the Customer		6-101	
6.6.1	Report Requirements	6-101	
6.6.2	Supervisory Signaling	6-103	
6.6.3	CCSAC Measurement Data	6-103	
6.6.4	Trunk Group Measurement Reports	6-103	
6.6.5	Design of Switched Access Services	6-103	
6.7 Rate Regulations		6-104	
6.7.1	Description and Application of Rates and Charges	6-104	
6.7.2	Minimum Periods	6-125	
6.7.3	Minimum Period Charge	6-126	
6.7.4	Change of Basic Service Arrangement or Feature Group Type	6-126	
6.7.5	Moves	6-129	
6.7.6	Measuring Access Minutes	6-129	
6.7.7	Network Blocking Charge for Access Trunk Arrangement 101XXXX or Feature Group D	6-140	
6.7.8	Application of Rates for Extension Service	6-141	
6.7.9	Message Unit Credit	6-141	
6.7.10	Local Information Delivery Service	6-142	
6.7.11	Mileage Measurement	6-142	
6.7.12	Shared Use	6-145	
6.7.13	Directory Assistance Information Surcharge	6-145	
6.8 Rates and Charges		6-146	
6.8.1	Switched Transport	6-146	
6.8.2	Local Switching	6-150	
6.8.3	Directory Assistance Information Surcharge	6-160	
6.8.4	Network Access Services	6-160	
6.8.5		6-162	
6.8.6	Message Unit Credit	6-162	
6.8.7	SS7 Interconnection	6-162	
6.8.8	Toll Free Access Service	6-162	
6.8.9	Billing Name and Address Service	6-163	(N)

(This page filed under Transmittal No. 1)

ACCESS SERVICE

6. Switched Access Service

6.1 General

Switched Access Service is available to customers for their use in furnishing their services to End Users. Switched Access Services may not be used as substitutes for the Telephone Company's Local and/or general exchange services. Switched Access Service provides for the ability to originate calls from an End User's premises to a customer designated premises, and to terminate calls from a customer designated premises to an End User's premises in the LATA where it is provided. Specific references to material describing the elements of Switched Access Service are provided in 6.1.2 and 6.2 following.

Rates and charges for Switched Access Service are set forth in 6.8 following. Rates and charges for Switched Access/Dedicated Transport are set forth in Section 6.8 following, with the exception of the services provided by the Telephone Company in the Metropolitan Statistical Areas (MSAs) in which the Telephone Company has received Phase II pricing flexibility pursuant to Subpart H of Part 69 of the Commission's Rules. The rates and charges for the Switched Access/Dedicated Transport services in the MSAs that have received Phase II pricing flexibility are set forth in Section 22. (N) (N)

The application of rates for Switched Access Service is described in 6.7 following. Rates and charges for services other than Switched Access Service, e.g., a customer's interLATA toll message service, may also be applicable when Switched Access Service is used in conjunction with these other services. Descriptions of such applicability are provided in 6.2 following. Finally, a message Unit credit is applied against line side

Switched Access Service charges as described in 6.7.9 following.

Pursuant to the FCC Dockets "In the Matter of Admendments of Part 69 of the Commission's Rules Relating to the Creation of Access Charge Subelements for Open Network Architecture (CC Docket No. 89-79) and Policy and Rules Concerning Rates for Dominant Carriers (CC Docket No. 87-313)", Report and Order and Order on Further Reconsideration and Supplemental Notice of Proposed Rulemaking, FCC 91-186, released July 11, 1991, the Telephone Company offers an Access Line Arrangement (ALA) and an Access Trunk Arrangement (ATA) and a number of Basic Service Elements (BSEs).

The existing Feature Group Arrangements will be offered as options during a transition period that starts when the new ALA and ATA are in effect. The transition period will expire at the time the ALA and ATA are included under Price Cap regulation, July 1, 1993. The Feature Group arrangements will be abolished at the end of the transition period.

In Memorandum Opinion and Order on Reconsideration released April 14, 1993, which modifies the Part 69/ONA Order, and requires that Bell Operating Companies maintain their existing Feature Groups side by side with unbundled ONA services through at least June 30, 1994.

(This page filed under Transmittal No. 43)

6. Switched Access Service (Cont'd)

6.1 General (Cont'd)

6.1.1 Switched Access Service Arrangements and Manner of Provision

(A) Switched Transport Service Arrangements

Switched Access Service is provided in an unbundled Basic Service Arrangements (BSA) offering one line side connection called (1) Access Line Arrangement (ALA) and one trunk side connection called (2) Access Trunk Arrangement (ATA). These arrangements are offered with technical choices and optional Basic Service Elements (BSEs). Switched Access Service is also provided in four optional service arrangements of standard and optional features called (1) Feature Group A (FGA), (2) Feature Group B (FGB), (3) Feature Group C (FGC) and (4) Feature Group D (FGD). In addition 800 Access Service and 900 Access Service are available through the use of the ATA and the trunkside Feature Groups. 500 Access Service is available through the use of ATAXXX and Feature Group D.

These arrangements are differentiated by their technical characteristics, e.g., line side vs. trunk side connection at the Telephone Company Switch, and the manner in which an end user accesses them in originating calling, e.g., with or without an access code. A description of each ALA and ATA is in 6.2.1 following. A description of each Feature Group is in 6.2 following. A description of 500, 800 Access Service and 900 Access Service is in 6.2 following. Ordering conditions in the provision of Switched Access Service are set forth in 5. preceding.

Switched Transport Service Arrangements permits a one-way or two-way voice frequency transmission path for transport of calls in the originating direction and in the terminating direction -- though not simultaneously.

6. Switched Access Service (Cont'd)

6.1 General (Cont'd)

6.1.1 Switched Access Service Arrangements and Manner of Provision

(A) Switched Transport Service Arrangements (Cont'd)

Switched Transport is comprised of various facilities, interfaces and features. The Switched Transport rate category is composed of three rate elements; Entrance Facilities, Direct-Trunked Transport or Tandem Switched Transport. In addition, an Interconnection Charge applies.

The Tandem-Switched element applies in addition when Tandem-Switched transport is provided. Dedicated Signalling Transport is available as an option of both Direct Trunked Transport and Tandem Switched Transport. A multiplexing charge may also apply when facilities of one capacity are connected to facilities of another capacity.

Switched Transport elements can be ordered in combination of:

(a) Entrance Facilities only.
(b) Entrance Facilities and Direct Trunked Transport (directly routed to an end office).
(c) Entrance Facilities and Direct Trunked Transport(routed through an Access Tandem Switch).
(d) Direct Trunked Transport only.
(e) Tandem Switched Transport and Direct Trunked Transport.
(f) Expanded Interconnection Service Channel Termination

Multiplexing charges will apply when a higher capacity Entrance Facilities or EISCT is interconnected with a lower capacity Direct-Trunked Transport, when a higher capacity Direct-Trunked Transport is interconnected with a lower capacity Direct-Trunked Transport at a hub location, when other than a Direct-Trunked Transport DS1 transport channel is interconnected to a digital end office switch, and when other than a Direct-Trunked Voice Grade transport channel is interconnected to an analog end office switch.

(This page filed under Transmittal No. 1)

6. Switched Access Service (Cont'd)

6.1 General (Cont'd)

6.1.1 Switched Access Service Arrangements and Manner of Provision(Cont'd)

(A) Switched Transport Service Arrangements (Cont'd)

When the customer orders Direct-Trunked Transport and requests such transport to be interconnected with Entrance Facilities or an EISCT of another customer, the interconnection will be provided if the customer requesting the interconnection provides a letter authorizing such interconnect and use of the Entrance Facility from the other customer. For such an arrangement, the charges for the Direct-Trunked Transport and any associated Tandem Switch and/or Multiplexing charge will be billed to the ordering customer.

No billing of Entrance Facility charges will be made to the customer ordering Direct-Trunked Transport. No adjustment of the Entrance Facility charges will be made to the customer providing the Entrance Facilities. The customer permitting another customer to use its Entrance Facilities bears the responsibility to obtain payment for the use of its Entrance Facilities from another customer.

Rates and charges for these elements and the optional features available are set forth in 6.8 following.

Switched Transport is ordered under the Access Order provisions set forth in Section 5 (Ordering Options for Switched and Special Access Service). Ordering provisions as set forth in 2.4.8 (Billing of Access Service Provided by More Than One Telephone Company) will apply when more than one Exchange Telephone Company is involved in the provision of a Switched Transport facility. Following are descriptions of the available facilities, interfaces and features.

6. Switched Access Service (Cont'd)

6.1 General (Cont'd)

6.1.1 Switched Access Service Arrangements and Manner of Provision (Cont'd)

(B) Transport Channels and Multiplexing

Switched Transport is comprised of specific channel types. These connections may be either analog or digital. Analog connections are differentiated by spectrum and bandwidth; digital connections are differentiated by bit rate. Depending upon the spectrum, bandwidth or bit rate selected by the customer, multiplexing, as described in (C) following, may also be required to allow interconnection with other transport channels or to a Telephone Company switch.

For Entrance Facilities and Direct Trunked transport, the transport channel shall be specified by the customer. The customer shall specify an interface group at its premises. Interface groups are set forth in 15.1 following.

6. Switched Access Service (Cont'd)

6.1 General (Cont'd)

6.1.1 Switched Access Service Arrangements and Manner of Provision (Cont'd)

(B) Transport Channels and Multiplexing (Cont'd)

Multiplexing is a chargeable optional feature of Switched transport. The customer has the option of ordering digital facilities at a DS3 level (i.e., 44.736 Mbps) to a Telephone Company Hub for multiplexing to 28 channels at a DS1 level (1.544 Mbps) or at a DS1 level for multiplexing to 24 channels at a DS0 level (64Kbps).

Use of Multiplexing allows customers to interconnect Entrance Facilities or EISCT of one capacity or bandwidth to Direct Trunked Facilities or Tandem Trunked Facilities of a different capacity or bandwidth. Multiplexing also allows for the interconnection of Direct Trunked Facilities or Tandem Trunked Facilities with end offices or access tandems requiring capacity or bandwidth different from that of the interconnecting facility.

Two multiplexing options, DS1 to Voice Grade Multiplexing and DS3 to DS1 Multiplexing will be provided as described in 6.7.1 following.

When ordering, the customer will specify the desired multiplexing hub(s) selected from the National Exchange Carrier Association, Inc. Tariff No. 4.

Shared Use as set forth in Section 7.2.7 following does not apply to Switched transport.

Multiplexing can be applied to a Switched Access Entrance Facility or Direct Trunked transport.

(This page filed under Transmittal No. 1)

6. Switched Access Service (Cont'd)

6.1 General (Cont'd)

6.1.1 Switched Access Service Arrangements and Manner of Provision (Cont'd)

(C) Manner of Provision

Switched Access is furnished in either quantities of lines or trunks. ALA or FGA Access and ATA950 or FGB Access are furnished on a per-line or per-trunk basis respectively. ATANEA or FGC Access and ATAXXX or FGD Access are furnished on a per trunk basis. Entrance Facilities are furnished in either capacities of DS0, DS1 or DS3. DNAL is furnished in quantities of channels.

Trunks and lines are differentiated by type and directionality of traffic.

(1) Traffic Types

There are five major traffic types identified as: Originating, Terminating, Directory Assistance, Originating Data, and Terminating Data. Originating traffic type represents access capacity within a LATA for carrying traffic from the end user to the customer; Terminating traffic type represents access capacity within a LATA for carrying traffic from the customer to the end user; Directory Assistance traffic type represents access capacity within a LATA for carrying Directory Assistance traffic from the customer to a Directory Assistance location. Originating Data and Terminating Data traffic type represents access capability within a LATA for carrying digital traffic at speeds of 56 kbps to 64 kbps between the customer and the customer's end user.

6. Switched Access Service (Cont'd)

6.1 General (Cont'd)

6.1.1 Switched Access Service Arrangements and Manner of Provision (Cont'd)

(C) Manner of Provision (Cont'd)

(1) Traffic Types (Cont'd)

When ordering capacity for Switched Access the customer must at a minimum specify such access capacity in terms of Originating traffic types and/or Terminating traffic types or 56 kpbs or 64CCC traffic types. 56 kpbs and 64 kbps are available only on ATAXXXX or FGD. Directory Assistance traffic type is used for ordering Directory Assistance Access Service as set forth in 9. following.

Because some customers will wish to further segregate their originating traffic into separate trunks groups, or because segregation my be required by network considerations, Originating traffic is further categorized into Domestic, 500, 800, 900, Operator and IDDD. Domestic traffic represents access capacity for carrying only domestic traffic other than 500, 800, 900 and Operator traffic; IDDD traffic represent access capacity for carrying only international traffic; and, 500, 800, 900 and Operator traffic represents access capacity for carrying, respectively, only 500, 800, 900 or Operator traffic. When ordering such types of access capacity, the customer must specify Domestic, 500, 800, 900, Operator or IDDD traffic types

For Feature Group D or Access Trunk Arrangement 101XXXX Switched Access Service with the CCSAC optional feature, i.e., out of band signaling, as described in 6.1.2 (A)(2)(d), an SS7 Signaling Connection is required between the Telephone Company STP and the customer's SPOT. When ordering the CCSAC optional feature, the customer shall specify that all traffic be equipped with out of band signaling. At the same time, 64CCC may be specified.

6. Switched Access Service (Cont'd)

6.1 General (Cont'd)

6.1.1 Switched Access Service Arrangements and Manner of Provision (Cont'd)

(C) Manner of Provision (Cont'd)

(2) Design and Traffic Routing of Switched Access Service

For Switched Access Service, the customer desired line or trunk directionality and/or traffic routing of the Switched Access Service between the customer's premises and the entry switch, as well as the number of transmission paths are specified on the customer's order for service.

In addition, the customer shall specify on the customer's order for service, the Switched Transport facilities to be provided (i.e., Entrance Facility or EISCT, Direct Trunked transport and/or Tandem Switched transport). When specifying the Switched Transport facilities to be provided, the customer must indicate if the facilities to be provided are existing (i.e., spare transmission paths) or are new.

6. Switched Access Service (Cont'd)

6.1 General (Cont'd)

6.1.2 Rate Categories

There are four rate categories which apply to Switched Access Service:

- Switched Transport (described in 6.1.2(A) following)
- Local Switching (described in 6.1.2(B) following)
- Common Line (described in Sections 3. and 4. preceding)
- Transport Interconnection Charge (described in 6.1.2(B)(3) following)

There are also specific rates which apply to Network Access Services (described in 6.8.4 following).

In addition, there is a Directory Assistance Information Surcharge that applies to all Switched Access Basic Service arrangements and Feature Groups. The description and application of these charges are set forth in 6.7.13 following.

6. Switched Access Service (Cont'd)

6.1 General (Cont'd)

6.1.2 Rate Categories (Cont'd)

The following diagram depicts a generic view of the components of Switched Access Service and the manner in which the components are combined to provide a complete Access Service.

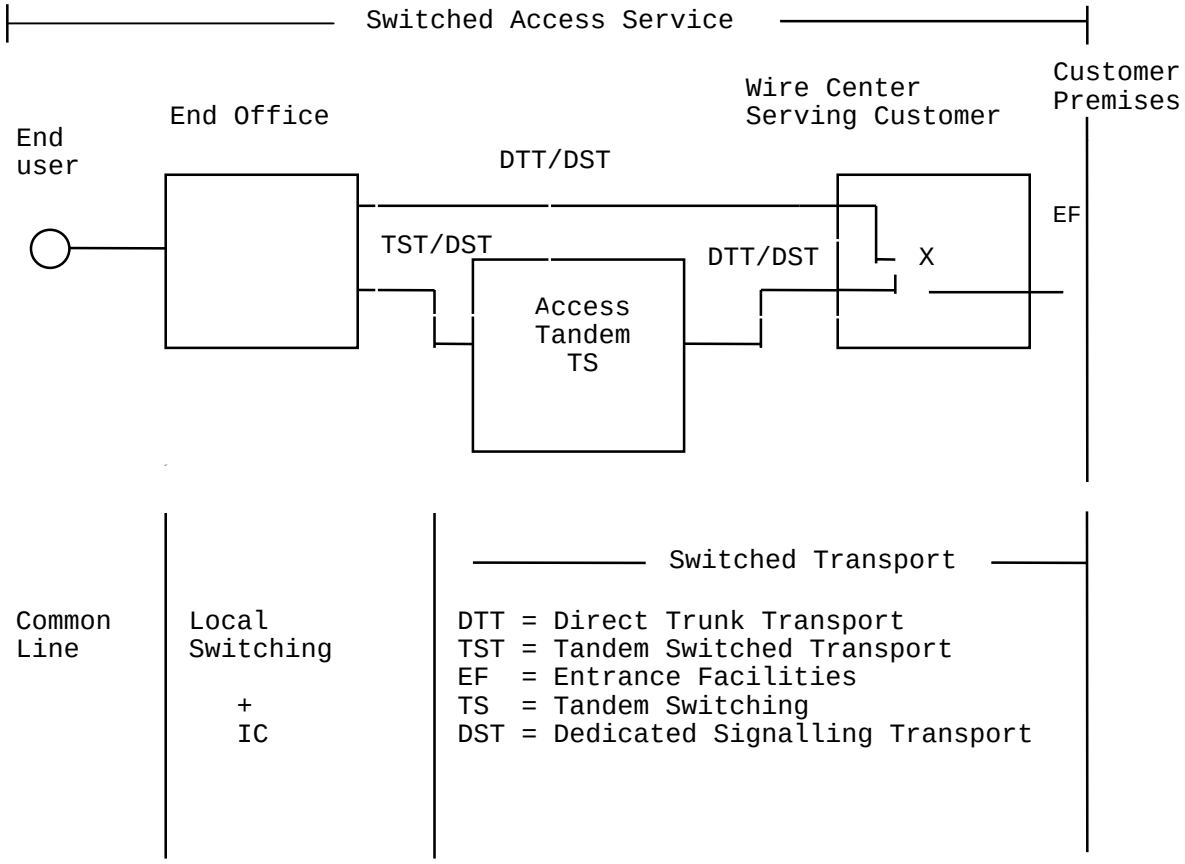

LS - Local Switching
IC - Interconnection Charge
CL - Common Line

Common Line access is provided under Section 3. and 4. preceding.

6. Switched Access Service (Cont'd)

6.1 General (Cont'd)

6.1.2 Rate Categories (Cont'd)

(A) Switched Transport

Switched Transport elements are defined as follows:

(1) Entrance Facility

Entrance Facility is defined as the transmission path between the customer's premises and the Serving Wire Center where the customer would normally obtain local dial tone. The Entrance Facility rate is a non distance sensitive flat monthly recurring charge. The Entrance Facility may be order with an analog or digital interface. Voice frequency (DS0), DS1 and DS3 interface groups are defined in 15 following.

Switched Access Entrance Facility rates and charges are set forth in 6.8.1 following

6. Switched Access Service (Cont'd)

6.1 General (Cont'd)

6.1.2 Rate Categories (Cont'd)

(A) Switched Transport (cont'd)

(2) Direct Trunked Transport

Direct Trunked Transport is defined as the dedicated transmission path between the customer's Serving Wire Center and an access tandem, hub or end office where the customer's originating and/or terminating traffic is switched. Direct Trunked Transport is a distance sensitive mileage rate element as set forth in 6.8.1 following.

The Direct Trunked Transport mileage rate is calculated on the airline distance between the Serving Wire Center associated with a customer designated premise and the access tandem, hub or end office switch. To determine the rate, compute the mileage using the V&H coordinates method, as set forth in the National Exchange Carrier Association Tariff F.C.C. No. 4. Exceptions to the mileage measurement rules are set forth in 6.7.11 following.

6. Switched Access Service (Cont'd)

6.1 General (Cont'd)

6.1.2 Rate Categories (Cont'd)

(A) Switched Transport (Cont'd)

(3) Tandem Switched Transport

Tandem Switched Transport is provided as five subelements:

-Tandem-Switched Transmission/Common Transport
-Host Remote Transmission
-Tandem Switching
-Dedicated Tandem Trunk Port
-Tandem End Office Multiplexing

The application of the Tandem-Switched Transport subelements is set forth in (a),(b), (c), (d) and (e) following.

(a) Tandem Switched Transmission/Common Transport

(1) Tandem-Switched Transmission/Common Transport has two rates: a per access minute of use rate and a per access minutes of use per mile rate. The per access minute of use rate applies to the non-distance sensitive portion of the Tandem-Switched Transport for the termination of both ends of the facility. The per access minute of use per mile rate applies to the distance sensitive portion of the Tandem-Switched Transport facility. When the mileage for Tandem-Switched Transmission/Common Transport is zero, these rates will not apply.

ACCESS SERVICE

6. Switched Access Service (Cont'd)

6.1 General (Cont'd)

6.1.2 Rate Categories (Cont'd)

(A) Switched Transport (Cont'd)

(3) Tandem Switched Transport

(a) Tandem Switched Transmission/Common Transport (Cont'd)

(1) (Cont'd)

The per access minute of use and a per access minutes of use per mile rate also applies to interoffice links that are provided for the common use of all customers but which are not switched through an access tandem. The Telephone Company will identify this application of Tandem-Switched Transmission as Common Transport.

Common Transport may be associated with both tandem routed services (such as when Tandem-Switched Transport is to a host office to access remotes) and with direct routed services (as set forth in 6.7.11). Mileage for Common Transport is always measured separately from Tandem-Switched Transmission and Direct-Trunked Transport.

(2) Mileage measurement is described in 6.7.11.

(b) Host Remote Transmission

The Host Remote Transmission subelement applies between the Host and the remote for the common use of all customers but which are not switched through an access tandem. When both Tandem-Switched Transmission and Host Remote Transmission are applicable, mileage is measured separately.

(c) Tandem Switching

The access tandem switching rate for tandem switched transport is a usage sensitive charge based on the originating and terminating minutes of use via the access tandem switch.

(d) Tandem End Office Multiplexing

Tandem Multiplexing provides for the multiplexing equipment functionality on the end office side of the tandem switch and for terminating FGA BSA-A minutes of use between the dialtone office and the end office.

(e) Dedicated Tandem Trunk Port

The Dedicated Tandem Trunk Port provides for the port associated with each in service dedicated trunk terminating on the serving wire center side of the access tandem.

(This page filed under Transmittal No. 1)

6. Switched Access Service (Cont'd)

6.1 General (Cont'd)

6.1.2 Rate Categories (Cont'd)

(A) Switched Transport (Cont'd)

(4) Interface Groups

Five Interface Groups are provided for terminating the Switched Transport at the customer's premises. Each Interface Group provides a specified premises interface (e.g., two-wire, four-wire, DS1, etc.). Where transmission facilities permit, the individual transmission path between the customer's designated premises and the first point of switching may at the option of the customer be provided with optional features as set forth in (2)(a) and (b) following.

As a result of the customer's access order and the type of Telephone Company transport facilities serving the customer's premises, the need for signaling conversions or two-wire to four-wire conversions, or the need to terminate digital or high frequency facilities in channel bank equipment may require that Telephone Company equipment be placed at the customer's designated premises. For example, if a voice frequency interface is ordered by the customer and the Telephone Company facilities serving the customer's designated premises are digital, then Telephone Company channel bank equipment must be placed at the customer's designated premises in order to provide the voice frequency interface ordered by the customer.

The CCSAC optional feature is available only with Feature Group D or Access Trunk Arrangement 101XXXX. FGD or ATAXXXX trunks are provided using Interface Groups 6 and 9. SS7 signaling connections are provided using Interface Group 6. Technical Publication TR-TSV-000905 provide the technical requirements.

6. Switched Access Service (Cont'd)

6.1 General (Cont'd)

6.1.2 Rate Categories (Cont'd)

(A) Switched Transport (Cont'd)

(4) Interface Groups (Cont'd)

The 64CCC option is provided using interface group 6. Technical Publication TR-NWT-000938 and TR-TSV-000962 provide additional technical requirements for 64CCC. Technical specifications concerning the available interface groups are set forth in 15.1 following.

(5) Optional Features

Where transmission facilities permit, the Telephone Company will, at the option of the customer, provide the following nonchargeable optional features in association with Switched Transport.

(a) Supervisory Signaling

Where the transmission parameters permit, and where signaling conversion is required by the customer to meet its signaling capability, the customer may order an optional supervisory signaling arrangement for each transmission path provided as set forth in 15.1.12 following.

The types of supervisory signaling available are described in Technical Reference TR-NPL-000334.

(b) Customer Specified Entry Switch Receive Level (TLV)

This feature allows the customer to specify the receive transmission level at the first point of switching. The range of transmission levels which may be specified is described in Technical Reference TR-NPL-000334. This feature is available with Interface Groups 2 through 10 for ALA or ATA950 and Feature Groups A and B.

6. Switched Access Service (Cont'd)

6.1 General (Cont'd)

6.1.2 Rate Categories (Cont'd)

(A) Switched Transport (Cont'd)

(5) Optional Features (Cont'd)

(c) Customer Specification of Switched Transport Termination (NL S+T+)

This option allows the customer to specify, for ATA950 or for Feature Group B routed directly to an end office or access tandem, a four-wire termination of the Local Transport at the entry switch in lieu of a Telephone Company selected two-wire termination. This option is available only when the ATA950 or Feature Group B arrangement is provided with Type B Transmission Specifications.

(d) Common Channel Signaling Access Capability (CCSAC)

This optional feature allows the customer to exchange signaling for call set-up via SS7 out of band signaling. This option is available only with FGD or ATAXXXX. This option requires the establishment of a SS7 Signaling Connection between the customer's signaling point of interface (SPOI) and the Telephone Company's Signaling Transfer Point (STP), as set forth in 6.1.2(A)(1) preceding.

(e) 64 Clear Channel Capability (64CCC)

This option is available with Feature Group D (FGD) and Access Trunk Arrangement 101XXXX (ATAXXX) with the CCSAC optional feature as set forth in (d) preceding.

6. Switched Access Service (Cont'd)

6.1 General (Cont'd)

6.1.2 Rate Categories (Cont'd)

(A) Switched Transport (Cont'd)

(5) Optional Features (Cont'd)

(e) 64 Clear Channel Capability (64CCC) (Cont'd)

64 CCC is designated as a new traffic type and requires the establishment of a new minimum period as described in 6.7.3 preceding.

64CCC will be provided in connection with FGD and ATAXXX with CCSAC where appropriate Telephone Company equipment and other facilities exist, as specified in the National Exchange Carrier Association, Inc. Tariff F.C.C. No. 4. Technical Reference TR-NWT-000938 provides the technical specifications for 64CCC. The SS7 protocol requirements for 64CCC are specified in TR-TSV-000962.

(f) Tandem Signaling

This option provides Carrier Identification Code (CIC) and OZZ signaling information necessary for tandem switching. This optional feature is available only on one-way originating Feature Group D trunks from equal access end offices to a Tandem Switching Provider's (TSP) point of termination. This option is offered with either multifrequency (MF) or Signaling System 7 (SS7) signaling protocol.

In the MF signaling format, Carrier Identification Code (CIC) and OZZ will be forwarded. In the SS7 signaling format, Transit Network Selection (TNS) will be forwarded in the Initial Address Message.

TSP's can terminate switched access traffic to Telephone Company end offices or access tandems over any currently tariffed Feature Group Service. The customer ordering the terminating Feature Group Service will be the customer of record and billed the terminating usage. This customer may be either a TSP or a customer of the TSP.

6. Switched Access Service (Cont'd)

6.1 General (Cont'd)

6.1.2 Rate Categories (Cont'd)

(A) Switched Transport (Cont'd)

(5) Optional Features (Cont'd)

(b) Tandem Signaling (Cont'd)

If the TSP is the customer of record and requests the Telephone Company to separately bill the traffic usage to its multiple customers, the TSP must provide to the Telephone Company billing tapes in a format to be mutually agreed upon by the Telephone Company and the TSP. These tapes must be provided in a standard EMI format and received by the Telephone Company within a mutually agreed upon timeframe.

Technical specifications for Tandem Signaling are set forth in Generic Requirements GR-3334-CORE.

A maximum of four OZZ codes (MF) or circuit codes (SS7) per CIC per end office will be provided. The Telephone Company will control and assign the OZZ codes to the customer ordering this feature. FGD trunks with Tandem Signaling may not be alternately routed to the Telephone Company's Access Tandem.

(6) Chargeable Optional Features

(a) Multiplexing

This option allows the customer to convert a DS3 (44.736 Mbps) to 28 DS1 channels or a DS1 (1.544 Mbps) to 24 DS0 channels (64kbps). A charge is specified in 6.8.1(I) following per multiplexing arrangement.

(N)

6. Switched Access Service (Cont'd)

6.1 General (Cont'd)

6.1.2 Rate Categories (Cont'd)

(A) Switched Transport (Cont'd)

(6) Chargeable Optional Features (Cont'd)

(b) Carrier Identification Parameter (CIP)

Technical specifications for Carrier Identification Parameter (CIP) are set forth in Technical References GR-394-CORE and GR-905-CORE.

Carrier Identification Parameter is an optional feature which identifies and transmits the CIC within the SS7 out of band call set up, known as the initial address message (IAM), associated with each call sent to subscribing customers. CIP is only available with originating FGD Switched Access Service from suitably equipped SS7 out of band signaling end offices and access tandems. When CIP is provided, the switch will transmit the 3 or 4 digit CIC of the presubscribed line or the CIC selected when the end user places a call using 101XXXX dialing. CIP is provided per trunk group at a monthly recurring rate as specified in 6.8.1(I). (N)

6. Switched Access Service (Cont'd)

6.1 General (Cont'd)

6.1.2 Rate Categories (Cont'd)

(B) Local Switching

This rate category provides for (1) local end office switching, i.e., the common switching functions associated with the various Switched Access Service arrangements, (2) the termination of switched transport at end offices, (3) the termination of common lines and WATS Access Lines at end offices, (4) intercept functions, i.e., the termination of certain calls at a Telephone Company intercept operator or recording, (5) the dedicated End Office Port terminating in the end office, and (6) the Shared End Office Trunk Port for termination of Common Transport trunks for tandem routed traffic.

This category includes usage sensitive rates and both chargeable and nonchargeable optional features.

(1) Usage Sensitive Rates

The usage sensitive rates are applied on a per minute of use basis and are divided into two categories: LS1 and LS2 - which pertain to Feature Groups; LS1A and LS2A which pertain to unbundled Basic Service Arrangements.

(a) The first category, LS1, provides local switching functions for Feature Groups A and B, except for Feature Group A and Feature Group B used to terminate traffic to a WATS Access Line (WAL) provided from an equal access office.

LS1A provides local switching functions for Access Line Arrangement (ALA) and Access Trunk Arrangement with the 950 Option (ATA950), except for ALA and ATA950 used to terminated traffic to a WATS Access line (WAL) provided from an equal access office.

(b) The second category, LS2, provides local switching functions for Feature Group A and Feature Group B used to terminate traffic to a WATS Access Line (WAL) provided from an equal access end office, Feature Group C, Feature Group D and 800 or 900 Access Service.

LS2A provides local switching functions for Access Line Arrangements and Access Trunk Arrangement with the 950 Option used to terminate traffic to a WATS Access Line (WAL) provided from an equal access end office, Access Trunk Arrangement without Equal Access (ATANEA), Access Trunk Arrangement with 101XXXX (ATAXXXX) and 800 or 900 Access Service.

6. Switched Access Service (Cont'd)

6.1 General (Cont'd)

6.1.2 Rate Categories (Cont'd)

(B) Local Switching (Cont'd)

Where end offices are appropriately equipped, international dialing also may be provided as a capability of LS2 or LSA2. International dialing provides the capability of switching international calls with service prefix and address codes having more digits than are capable of being switched through a standard ATANEA or ATAXXX or FGC or FGD equipped end office.

Rates for LS1 and LS2 are set forth in 6.8.2(A) following. The application of these rates with respect to individual Feature Groups is as set forth in 6.7.1(D) following.

Access tandem switching provides the function of switching traffic from the customer's serving wire center through the access tandem to the customer designated end office switch(es).

Rates for LS1A and LS2A are set forth in 6.8.2 following. The application of these rates with respect to individual Basic Service Arrangements is as set forth in 6.7.1 (D) following.

Rates for Local Switching and Access Tandem Switching are set forth in 6.8 following.

The number of local switching transmission paths will be determined as set forth in 6.5.5 following.

(2) Optional Features

Various Common Switching, Transport Termination and WATS Access Line Termination optional features are available and are described in 6.3 following.

(This page filed under Transmittal No. 1)

6. Switched Access Service (Cont'd)

6.1 General (Cont'd)

6.1.2 Rate Categories (Cont'd)

(B) Local Switching (Cont'd)

(3) Transport Interconnection Charge

The Transport Interconnection charge rate elements are applied on a per minute of use basis to all access customers that interconnect with the Telephone Company's switched access network. The Transport Interconnection Charge rate elements are assessed on a premium/non-premium, originating and terminating basis based on the equal access capabilities of the end offices.

6. Switched Access Service (Cont'd)

6.1 General (Cont'd)

6.1.3 Special Facilities Routing

Any customer may request that the facilities used to provide Switched Access Service be specially routed. The regulations, rates and charges for Special Facilities Routing (i.e., Avoidance, Diversity and Cable-Only) are set forth in 11. following.

6.1.4 Design Layout Report

At the request of the customer, the Telephone Company will provide to the customer the makeup of the facilities and services provided from the customer's premises to the first point of switching. This information will be provided in the form of a Design Layout Report. The Design Layout Report will be provided to the customer at no charge, and will be reissued or updated whenever these facilities are materially changed.

6.1.5 Testing

(A) Acceptance Testing

At no additional charge, the Telephone Company will, at the customer's request, cooperatively test, at the time of installation, the following parameters: loss, C-notched noise, C-message noise, 3-tone slope, d.c. continuity and operational signaling. When the Local Transport is provided with Interface Groups 2 through 10, and the Transport Termination is two-wire (i.e., there is a four-wire to two-wire conversion in Local Transport), balance parameters (equal level echo path loss) may also be tested.

Entrance Facility and/or Direct Trunked Transport acceptance tests will include tests for the parameters applicable to the service as specified in the order for service.

6. Switched Access Service (Cont'd)

6.1 General (Cont'd)

6.1.5 Testing (Cont'd)

(B) Routine Testing

At no additional charge, the Telephone Company will, at the customer's request, test after installation on an automatic or manual basis, 1004 Hz loss, C-message noise and Balance (Return loss).

In the case of automatic testing, the customer shall provide remote office test lines and 105 test lines with associated responders or their functional equivalent.

The frequency of these tests will be that which is mutually agreed upon by the customer and the Telephone Company, but shall consist of not less than quarterly 1004Hz Loss and C-message noise tests and an annual Balance test. Trunk test failures requiring customer participation for trouble resolution will be provided to the customer on an as-occurs basis.

Additional tests may be ordered as set forth in 13.3.5 following. Charges for these additional tests are set forth in 13.3.5(C) following.

6.1.6 Ordering Options and Conditions

Switched Access Service is ordered under the Access Order provisions set forth in 5.2 preceding. Also, included in that section are other charges which may be associated with ordering Switched Access Service (e.g., Service Date Change Charges, Cancellation Charges, etc.).

6.1.7 CCSAC Testing Requirements

For FGD or ATAXXX with the CCSAC optional feature, network compatibility and other operational tests will be performed cooperatively by the Telephone Company and the customer. These tests are as specified in the Bellcore Common Channel Signaling Network Specification Technical Reference TR-TSV-000905. These tests must be successfully completed prior to providing the CCSAC optional feature.

Switched Access Service (Cont'd)

6.2 Provision and Description of Switched Access Service

Switched Access Service is provided in two different arrangements. The two arrangements provisioned are Direct trunked transport and Tandem Switched transport. Entrance facilities may be provisioned for Direct trunked transport only. The provision of each Switched access Service requires Switched Transport facilities and the appropriate End Office functions. There are various optional features available with the Feature Groups and Access Arrangements. The Switched Transport, Common Switching and Transport Termination optional features are available at all Telephone Company end office switches, unless stated otherwise. In addition, a WATS Access Line Service as described in 7.7.5 following may, at the option of the customer, be provided for use with Switched Access Service. WATS Access Line Termination optional features are available in end office designated as WATS Serving Offices.

There are three specific voice transmission specifications (i.e., Types A, B, and C) that have been identified for the provision of Switched Access Service.

Switched Access Service is arranged for either originating, terminating or two-way calling. Originating calling permits the delivery of calls from Telephone Exchange Service locations to the customer's premises. Terminating calling permits the delivery of calls from the customer's premise to Telephone Exchange Service locations. Two-way calling permits the delivery of calls in both directions, but not simultaneously.

Following are detailed descriptions of the available Switched Access Services. Each Switched Access Service is described in terms of its specific physical characteristics and calling patterns, the transmission specifications with which it is provided, the optional features available for use with it and the standard testing capabilities.

6. Switched Access Service (Cont'd)

6.2 Provision and Description of Switched Access Service (Cont'd)

Following are detailed descriptions of each of the available Basic Service Arrangements and Feature Groups. Each Arrangement or Feature Group is described in terms of its specific physical characteristics and calling capabilities, the transmission specifications with which it is provided, the optional features available for use with it and the standard testing capabilities.

6.2.1 Access Line Arrangement (ALA) and Feature Group A (FGA)

(A) Description

ALA and FGA Access, which is available to all customers, provides line side access to Telephone Company end office switches with an associated seven digit local telephone number for the customer's use in originating communications from and terminating communications to an Interexchange Carrier's Interstate Service or a customer provided interstate communications capability. The customer must specify the Interexchange Carrier to which the ALA or FGA service is connected or, in the alternative, specify the means by which the ALA or FGA access communications is transported to another state.

(1) ALA or FGA is provided in connection with Telephone Company electronic and electromechanical end offices. At the option of the customer, ALA or FGA is provided on a single or multiple line group basis and is arranged for originating calling only, terminating calling only, or two-way calling.

(2) ALA or FGA provides a line side termination at the first point of switching (dial tone office). The line side termination will be provided with either ground start supervisory signaling or loop start supervisory signaling. The type of signaling is at the option of the customer.

6. Switched Access Service (Cont'd)

6.2 Provision and Description of Switched Access Service (Cont'd)

6.2.1 Access Line Arrangement (ALA) and Feature Group A (FGA) (Cont'd)

(A) Description (Cont'd)

(3) The Telephone Company shall select the first point of switching, within the selected LATA, at which the line side termination is to be provided unless the customer requests a different first point of switching and Telephone Company facilities and measurement capabilities, where necessary, are available to accommodate such a request.

(4) A seven digit local telephone number assigned by the Telephone Company is provided for access to ALA or FGA switching in the originating direction. The seven digit local telephone number will be associated with the selected end office switch and is of the form NXX-XXXX.

If the customer requests a specific seven digit telephone number that is not currently assigned, and the Telephone Company can, with reasonable effort, comply with that request, the requested number will be assigned to the customer.

(5) ALA or FGA switching, when used in the terminating direction, is arranged with dial tone start-dial signaling. When used in the terminating direction ALA or FGA switching may, at the option of the customer, be arranged for dial pulse or dual tone multifrequency address signaling, subject to availability of equipment at the first point of switching. When ALA or FGA switching is provided in a hunt group or uniform call distribution arrangement, all ALA or FGA switching will be arranged for the same type of address signaling.

6. Switched Access Service (Cont'd)

6.2 Provision and Description of Switched Access Service (Cont'd)

6.2.1 Access Line Arrangement (ALA) and Feature Group A (FGA) (Cont'd)

(A) Description (Cont'd)

(6) No address signaling is provided by the Telephone Company when ALA or FGA Switching is used in the originating direction. Address signaling in such cases, if required by the customer, must be provided by the customer's end user using inband tone signaling techniques. Such inband tone address signals will not be regenerated by the Telephone Company and will be subject to the ordinary transmission capabilities of the Local Transport provided.

(7) ALA or FGA switching, when used in the terminating direction, may be used to access valid NXXs in the LATA, local operator service (0- and 0+), Directory Assistance (411 where available and 555-1212), emergency reporting service (911 where available), exchange telephone repair (611 where available), time or weather announcement services of the Telephone Company, community information services of an information service provider, and other

6. Switched Access Service (Cont'd)

6.2 Provision and Description of Switched Access Service (Cont'd)

6.2.1 Access Line Arrangements (ALA) and Feature Group A (FGA) (Cont'd)

(A) Description (Cont'd)

(7) (Cont'd)

customers' services (by dialing the appropriate digits). Charges for ALA or FGA terminating calls requiring operator assistance or calls to 611 or 911 will only apply where sufficient call details are available. Additional non-access charges will also be billed on a separate account for (1) an operator surcharge, as set forth in the local exchange tariffs, for local operator assistance (0- and 0+) calls, (2) calls to certain community information services, for which rates are applicable under Telephone Company exchange service tariffs, e.g., 976 (DIAL-IT) Network Services, and, (3) calls from an ALA or a FGA line to another customer's service in accordance with that customer's applicable service rates when the Telephone Company performs the billing function for that customer. For calls to Directory Assistance (411 and 555-1212, whichever is available), Local Transport rates for ALA or FGA Switched Access Service will not apply. Instead, Local Transport for calls to this service is subject to a per call rate as set forth in 9.6(B) following. Additionally, calls to Directory Assistance are subject to the Directory Assistance Service Call rate set forth in 9.6(A) following.

6. Switched Access Service (Cont'd)

6.2 Provision and Description of Switched Access Service (Cont'd)

6.2.1 Access Line Arrangement (ALA) and Feature Group A (FGA) (Cont'd)

(A) Description (Cont'd)

(8) When an ALA or a FGA switching arrangement for an individual customer (a single line or entire hunt group) is discontinued at an end office, an intercept announcement is provided. This arrangement provides, for a limited period of time, an announcement that the service associated with the number dialed has been disconnected.

(B) Optional Features

(1) Common Switching Optional Features and Basic Service Elements

(a) Hunt Group Arrangement*
(b) Uniform Call Distribution Arrangement*
(c) Nonhunting Number for Use with Hunt Group Arrangement or Uniform Call Distribution Arrangement*
(d) Call Denial
(e) Service Code Denial
(f) Hunt Group Arrangement for Use with WATS Access Line Service
(g) Uniform Call Distribution Arrangement for Use with WATS Access Line Service
(h) Nonhunting Number for Use with Hunt Group Arrangement or Uniform Call Distribution Arrangement for Use with WATS Access Line Service
(i) Band Advance Arrangement for Use with WATS Access Line Service
(j) Call Transfer*
(k) Direct Inward Dialing (DID)*
(l) Answer Supervision Lineside

*For ALA customers (a), (b), (c), (j) and (k) will be ordered under 6.8.2 Common Switching Optional Features and BSEs

(This page filed under Transmittal No. 1)

6. Switched Access Service (Cont'd)

6.2 Provision and Description of Switched Access Service (Cont'd)

6.2.1 Access Line Arrangement (ALA) and Feature Group A (FGA) (Cont'd)

(B) Optional Features (Cont'd)

(2) Transport Termination Optional Features

(a) Two-way operation with dial pulse address signaling and loop start supervisory signaling
(b) Two-way operation with dial pulse address signaling and ground start supervisory signaling
(c) Two-way operation with dual tone multifrequency address signaling and loop start supervisory signaling
(d) Two-way operation with dual tone multifrequency address signaling and ground start supervisory signaling
(e) Terminating operation with dial pulse address signaling and loop start supervisory signaling
(f) Terminating operation with dial pulse address signaling and ground start supervisory signaling
(g) Terminating operation with dual tone multifrequency address signaling and loop start supervisory signaling
(h) Terminating operation with dual tone multifrequency address signaling and ground start supervisory signaling
(i) Originating operation with loop start supervisory signaling
(j) Originating operation with ground start supervisory signaling

(3) Local Transport Optional Features

(a) Supervisory Signaling (as set forth in 6.1.2(A)(2)(a) preceding)
(b) Customer Specified Entry Switch Receive Level

(This page filed under Transmittal No. 1)

6. Switched Access Service (Cont'd)

6.2 Provision and Description of Switched Access Service (Cont'd)

6.2.1 Access Line Arrangement (ALA) and Feature Group A (FGA) (Cont'd)

(B) Optional Features (Cont'd)

(4) Certain other features which may be available in connection with ALA or Feature Group A are provided under the Telephone Company's local and/or general exchange service tariffs where technically feasible.

These are:
(a)Custom Calling Features
(b)Remote Call Forwarding
(c)Bill Number Screening
(d)IntraLATA extensions
(e)900 Call Blocking

(C) Transmission Specifications

ALA or FGA is provided with either Type B or Type C Transmission Specifications. The specifications for the associated parameters are guaranteed to the first point of switching. Type C Transmission Specifications are provided with Interface Group 1 and Type B is provided with Interface Groups 2 through 10. Type DB Data Transmission Parameters are provided with ALA or FGA to the first point of switching.

(D) Testing Capabilities

ALA or FGA is provided, in the terminating direction where equipment is available, with seven digit access to balance (100 type) test line and milliwatt (102 type) test line. In addition to the tests described in 6.1.5 preceding which are included with the installation of service and as ongoing routine testing, Additional Cooperative Acceptance Testing and Additional Manual Testing are available as set forth in 13.3.5 following.

(This page filed under Transmittal No. 1)

6. Switched Access Service (Cont'd)

6.2 Provision and Description of Switched Access Service (Cont'd)

6.2.2 Access Trunk Arrangement 950 (ATA950) and Feature Group B (FGB)

(A) Description

ATA950 and FGB Access, which is available to all customers, provides trunk side access to Telephone Company end office switches with an associated uniform access code generally 950-1XXX or 950-0XXX for the customer's use in originating communications from and terminating communications to an Interexchange Carrier's Interstate Service or a customer provided interstate communications capability. The customer must specify the Interexchange Carrier to which the ATA950 or FGB service is connected or, in the alternative, specify the means by which the ATA950 or FGB access communications is transported to another state.

(1) ATA950 or FGB, when directly routed to an end office (i.e., provided without the use of an access tandem switch), is provided at appropriately equipped Telephone Company electronic end office switches. When provided via Telephone Company designated electronic access tandem switches, ATA950 or FGB switching is provided at Telephone Company electronic and electromechanical end office switches.

(2) ATA950 or FGB is provided as trunk side switching through the use of end office or access tandem switch trunk equipment. The switch trunk equipment is provided with wink start start-pulsing signals and answer and disconnect supervisory signaling

(3) ATA950 or FGB switching is provided with multifrequency address signaling in both the originating and terminating directions. Except for ATA950 or FGB switching provided with the automatic number

6. Switched Access Service (Cont'd)

6.2 Provision and Description of Switched Access Service (Cont'd)

6.2.2 Access Trunk Arrangement 950 (ATA950) and Feature Group B (FGB) (Cont'd)

(A) Description (Cont'd)

(3) (Cont'd)

identification (ANI) or rotary dial station signaling arrangements as set forth in 6.3 following, any other address signaling in the originating direction, if required by the customer, must be provided by the customer's end user using inband tone signaling techniques. Such inband tone address signals will not be regenerated by the Telephone Company and will be subject to the ordinary transmission capabilities of the Switched Transport provided.

(4) The access code for ATA950 or FGB switching is generally a uniform access code. The form of the uniform access code is 950-0XXX or 950-1XXX for carriers. One uniform access code will be assigned to the customer for the customer's domestic communications and another will be assigned to the customer for its international communications, if required. These uniform access codes will be the assigned access numbers of all ATA950 or FGB switched access service provided to the customer by the Telephone Company.

(5) ATA950 or FGB switching, when used in the terminating direction, may be used to access valid NXXs in the LATA, time or weather announcement services of the Telephone Company, community information services of an information service provider and other customers'

6. Switched Access Service

6.2 Provision and Description of Switched Access Service (Cont'd)

6.2.2 Access Trunk Arrangement 950 (ATA950) and Feature Group B (FGB) (Cont'd)

(A) Description (Cont'd)

(5) (Cont'd)

services (by dialing the appropriate digits). When directly routed to an end office, only those valid NXX codes served by that end office may be accessed. When routed through an access tandem, only those valid NXX codes served by end offices directly subtending the access tandem may be accessed. Where direct trunking from a single access tandem within a IATA to all end offices subtending that tandem is not available, an alternate route may be used if available. In the case of LATAs with two access tandems, only those valid NXX codes served by end offices directly subtending either one of the access tandems may be accessed. The customer will also be billed additional non-access charges for calls to certain community information services for which rates are applicable under Telephone Company exchange service tariffs, e.g., 976 (DIAL-IT) Network Service. Additionally, non-access charges will also be billed for calls from an ATA950 or FGB trunk to another customer's service in accordance with that customer's applicable service rates when the Telephone Company performs the billing function for that customer. Calls in the terminating direction will not be completed to 950-OXXX or 950-lXXX access codes, local operator assistance (0- and 0+), Directory Assistance (411 and 555-1212), service codes (611 and 911) or 1OXXX access codes. Calls will be completed to Directory Assistance (NPA- 555-1212 or 555-1212) when ATA950 or FGB switching is combined with Directory Assistance switching. The combination of ATA950 or FGB Switched Access Service with DA service is provided as set forth in 9. following. ATA950 or FGB may not be switched, in the terminating direction, to Access Trunk Arrangements 950, NEA, XXX or to Switched Access Service Feature Groups B, C and D.

(This page filed under Transmittal No. 1)

6. Switched Access Service (Cont'd)

6.2 Provision and Description of Switched Access Service (Cont'd)

6.2.2 Access Trunk Arrangement 950 (ATA950) and Feature Group B (FGB) (Cont'd)

(A) Description (Cont'd)

(6) The Telephone Company will establish a trunk group or groups for the customer at end office switches or access tandem switches where ATA950 or FGB switching is provided. When required by technical limitations, a separate trunk group will be established for each type of ATA950 or FGB switching arrangement provided. Different types of ATA950 or FGB or other switching arrangements may be combined in a single trunk group at the option of the Telephone Company.

(7) When all ATA950 or FGB switching arrangements are discontinued at an end office and/or in a LATA, an intercept announcement is provided. This arrangement provides, for a limited period of time, an announcement that the service associated with the number dialed has been disconnected.

(B) Optional Features

(1) Common Switching ORtional Features

(a) Automatic Number Identification (ANI)

(b) Up to 7 Digit Outpulsing of Access Digits to Customer

(c) Hunt Group Arrangement for Use with WATS Access Line Service.

(This page filed under Transmittal No. 1)

6. Switched Access Service (Cont,d)

6.2 Provision and Description of Switched Access Service-(Cont,d)

6.2.2 Access Trunk Arrangement 950 (ATA950) and Feature Group B (FGB) (Cont'd)

(B) Optional Features (Cont'd)

(1) Common Switching Optional Features (Cont'd)

(d) Uniform Call Distribution Arrangement for Use with WATS Access Line Service.

(e) Nonhunting Number for Use with Hunt Group Arrangement or Uniform Call Distribution Arrangement for Use with WATS Access Line Service.

(f) Band Advance Arrangement for Use with WATS Access Line Service.

(g) Alternate Traffic Routing

(2) Transport Termination Optional Features

(a) Rotary Dial Station Signaling

(3) Switched Transport Optional Features

(a) Customer Specification of Local Transport Termination

(b) Supervisory Signaling (as set forth in 6.1.2(A)(2)(a) preceding)

(c) Customer Specified Entry Switch Receive Level

(This page filed under Transmittal No. 1)

6. Switched Access Service (Cont'd)

6.2 Provision and Description of Switched Access Service (Cont'd)

6.2.2 Access Trunk Arrangement (ATA950) and Feature Group B (FGB) (Cont'd)

(B) Optional Features (Cont'd)

(4) WATS Access Line Termination Optional Features

(a) E & M Supervisory Signaling

(5) Bill Number Screening

Another feature, Bill Number Screening, which may be available in connection with ATA950 or FGB, is provided under the Telephone Company's local and/or general exchange service tariffs.

(C) Transmission Specifications

ATA950 or FGB is provided with either Type B or Type C Transmission Specifications. The specifications for the associated parameters are guaranteed to the end office when routed directly or to the first point of switching when routed via an access tandem. Type C Transmission Specifications are provided with Interface Group 1 and Type B is provided with Interface Groups 2 through 10. Type DB Data Transmission Parameters are provided with ATA950 or FGB to the first point of switching.

(D) Testing Capabilities

ATA950 or FGB is provided, in the terminating direction where equipment is available, with seven digit access to balance (100 type) test line, milliwatt (102 type) test line, nonsynchronous or synchronous test line, automatic transmission measuring (105 type) test line, data transmission (107 type) test line, loop around test line, short circuit test line and open circuit test line. In addition to the tests described in 6.1.5

6. Switched Access Service (Cont'd)

6.2 Provision and Description of Switched Access Service (Cont'd)

6.2.2 Access Trunk Arrangement 950 (ATA950) and Feature Group B (FGB) (Cont'd)

(D) Testing Capabilities (Cont'd)

preceding which are included with the installation of service and as ongoing routine testing. Additional Cooperative Acceptance Testing, Additional Automatic Testing, and Additional Manual Testing are available as set forth in 13.3.5 following.

6.2.3 Access Trunk Arrangement Non Equal Access (ATANEA) and Feature Group C (FGC)

(A) Description

ATANEA and FGC Access, which is available only to providers of MTS and WATS, provides trunk side access to Telephone Company end office switches for the customer's use in originating and terminating communications. This service is available in all end offices which are not equipped for ATAXXX or Feature Group D End Office Switching. Existing ATANEA or FGC Access will be converted to ATAXXX or Feature Group D access when it becomes available in an end office.

(1) ATANEA or FGC is provided at all Telephone Company end office switches on a direct trunk basis or via Telephone Company designated access tandem switches. ATANEA or Feature Group C switching is furnished to providers of MTS and WATS at an end office switch unless ATAXXX or Feature Group D end office switching is provided in the same office. When ATAXXX or FGD switching is available, ATANEA or FGC switching will not be provided.

(This page filed under Transmittal No. 1)

6. Switched Access Service

6. Switched Access Service (Cont'd)

6.2 Provision and Description of Switched Access Service (Cont'd)

6.2.3 Access Trunk Arrangement Non Equal Access (ATANEA) and Feature Group C (FGC) (Cont'd)

(A) Description (Cont'd)

(2) ATANEA or FGC is provided as trunk side switching through the use of end office or access tandem switch trunk equipment. The switch trunk equipment is provided with answer and disconnect supervisory signaling. Wink start start-pulsing signals are provided in all offices where available. in those offices where wink start start-pulsing signals are not available, delay dial start-pulsing signals will be provided, unless immediate dial pulse signaling is provided, in which case no start-pulsing signals are provided.

(3) ATANEA or FGC is provided with multifrequency address signaling except in certain electromechanical end office switches where multifrequency signaling is not available. In such switches, the address signaling will be dial pulse, revertive pulse, immediate dial pulse or panel call indicator signaling, whichever is available. Up to 12 digits of the called party number dialed by the customer's end user using dual tone multifrequency or dial pulse address signals will be provided by Telephone Company equipment to the customer's premises where the Switched Access Service terminates. Such called party number signals will be subject to the ordinary transmission capabilities of the Switched Transport provided.

6. Switched Access Service (Cont'd)

6.2 Provision and Description of Switched Access Service (Cont'd)

6.2.3 Access Trunk Arrangement Non Equal Access (ATANEA) and Feature Group C (FGC) (Cont'd)

(A) Description (Cont'd)

(4) No access code is required for ATANEA or FGC switching. The telephone number dialed by the customer's end user shall be a seven or ten digit number for calls in the North American Numbering Plan (NANP). For international calls outside the NANP, a seven to twelve digit number may be dialed. The form of the numbers dialed by the customer's end user is NXX-XXXX, 0 or I + NXX-XXXX, NPA + NXX-XXXX, 0 or 1 + NPA + NXX-XXXX, and, when the end office is equipped for International Direct Distance Dialing (IDDD), 01 + CC + NN or Oll + CC + NN.

(5) ATANEA or FCC switching, when used in the terminating direction, may be used to access valid NXXs in the LATA, time or weather announcement services of the Telephone Company, community information services of an information provider, and other customers' services (by dialing the appropriate codes) when the services can be reached using valid NXX codes. When directly routed to an end office, only those valid NXX codes served by that office-may be accessed. When routed through an access tandem, only those valid NXX codes served by offices subtending the access tandem may be accessed. Where measurement capabilities exist, the

6. Switched Access Service (Cont'd)

6.2 Provision and Description of Switched Access Service (Cont'd)

6.2.3 Access Trunk Arrangement Non Equal Access (ATANEA) and Feature Group C (FGC) (Cont'd)

(A) Description (Cont'd)

(5)(Cont'd)

customer will also be billed additional non-access charges for calls to certain community information services, for which rates are applicable under telephone Company exchange service tariffs, e.g., 976 (DIAL-IT) Network Services. Additionally, non-access charges will also be billed for calls from an ATANEA or FGC trunk to another customer's service in accordance with that customer's applicable service rates when the Telephone Company performs the billing function for that customer. Calls in the terminating direction will not be completed to 950-OXXX or 950-lXXX access codes, local operator assistance (0- and 0+), Directory assistance (411 and 555- 1212), service codes (611 and 911) and 1OXXX access codes. Calls will be completed to Directory Assistance (NPA-555-1212 or 555-1212) when ATANEA or FGC switching is combined with Directory Assistance switching. The combination of ATANEA or FGC Switched Access Service with DA Service is provided as set forth in 9. following. ATANEA or FGC may not be switched, in the terminating direction, to Access Trunk Arrangements 950, NEA, XXX or Switched Access Service Feature Groups B, C or D.

(This page filed under Transmittal No. 1)

6. Switched Access Service (Cont'd)

6.2 Provision and Description of Switched Access Service (Cont'd)

6.2.3 Access Trunk Arrangement Non Equal Access (ATANEA) and Feature Group C (FGC) (Cont'd)

(A) Description (Cont'd)

(6) The Telephone Company will establish a trunk group or groups for the customer at end office switches or access tandem switches where ATANEA or FGC switching is provided. When required by technical limitations, a separate trunk group will be established for each type of ATANEA or FGC switching arrangement provided. Different types of ATANEA or FGC or other switching arrangements may be combined in a single trunk group at the option of the Telephone Company.

6. Switched Access Service (Cont'd)

6.2 Provision and Description of Switched Access Service-(Cont'd)

6.2.3 Access Trunk Arrangement Non Equal Access (ATANEA) and Feature Group C (FGC) (Cont'd)

(B) Optional Features

(1) Common Switching Optional Features

(a) Automatic Number Identification (ANI)
(b) Service Class Routing
(c) Dial Pulse Address Signaling
(d) Delay Dial Start-Pulsing Signaling
(e) Immediate Dial Pulse Address Signaling
(f) Alternate Traffic Routing
(g) Trunk Access Limitation
(h) End Office End User Line Service Screening for Use with WATS Access Line Service
(i) Hunt Group Arrangement for Use with WATS Access Line Service
(j) Uniform Call Distribution Arrangement for Use with WATS Access Line Service
(k) Nonhunting Number for Use with Hunt Group Arrangement or Uniform Call Distribution Arrangement for Use with WATS Access Line Service
(l) Band Advance Arrangement for Use with WATS Access Line Service

6. Switched Access Service (Cont'd)

6.2 Provision and Description of Switched Access Service-(Cont'd)

6.2.3 Access Trunk Arrangement Non Equal Access (ATANEA) and Feature Group C (FGC) (Cont'd)

(B) Optional Features (Cont'd)

(2) Transport Termination Optional Features

(a) Operator Trunks - Modified Operator Service (MOS) - i.e., Coin, Non-Coin and Combined Coin and Non-Coin. (Non-Coin Trunks are provided at Telephone Company electronic and electromechanical end offices. Coin and Combined Coin and Non-Coin are provided only at Telephone Company electronic end offices and other Telephone Company end offices where equipment is available.)

(3) Switched Transport Optional Features

(a) Supervisory Signaling (as set forth in 6.1.2(A)(2)(a) preceding)

(4) WATS Access Line Termination Optional Features

(a) E & M Supervisory Signaling
(b) Dialed Number Identification Service

(C) Transmission Specifications

ATANEA or FGC is provided with either Type B or Type C Transmission Specifications as follows:

- When routed directly to the end office either Type B or Type C is provided.

- When routed to an access tandem only Type B is provided.

- Type B or Type C is provided on the transmission path from the access tandem to the end office.

(This page filed under Transmittal No. 1)

6. Switched Access Service (Cont'd)

6.2 Provision and description of Switched Access Service (Cont'd)

6.2.3 Access Trunk Arrangement Non Equal Access (ATANEA) and Feature Group C (FGC) (Cont'd)

(C) Transmission Specifications (Cont'd)

Type C Transmission Specifications are provided with Interface Group 1 when routed directly to an end office. Type B is provided with Interface Groups 2 through 10, whether routed directly to an end office or to an access tandem.

Type DB Data Transmission Parameters are provided with ATANEA or FGC for the transmission path between the customer's premises and the end office when directly routed to the end office, and Type DB Data Transmission Parameters are provided for the transmission path between the customer's premises and the access tandem and between the access tandem and the end office when routed via an access tandem.

(D) Testing capabilities

ATANEA or FGC is provided, in the terminating direction where equipment is available, with seven digit access to balance (100 type) test line, milliwatt (102 type) test line, nonsynchronous or synchronous test line, automatic

6. Switched Access Service (Cont'd)

6.2 Provision and Description of Switched Access Service (Cont'd)

6.2.3 Access Trunk Arrangement Non Equal Access (ATANEA) and Feature Group C (Cont'd)

(D) Testing Capabilities (Cont'd)

transmission measuring (105 type) test line, data transmission (107 type) test line, loop around test line, short circuit test line and open circuit test line. In addition to the tests described in 6.1.5 preceding which are included with the installation of service and as ongoing routine testing, Additional Cooperative Acceptance Testing, Additional Automatic Testing and Additional Manual Testing are available as set forth in 13.3.5 following.

6.2.4 Access Trunk Arrangement 1OXXX (ATAXXX) and Feature Group D (FGD)

(A) Description

ATAXXX or FGD Access, which is available to all customers, provides trunk side access to Telephone Company end office switches with an associated uniform 1OXXX access code for the customer's use in originating and terminating communications. For FGD or ATAXXX with the CCSAC optional feature, out of band signaling is provided through Telephone Company designated STPS.

(1) ATAXXX or FGD is provided at Telephone Company designated electronic end office switches whether routed directly or via Telephone Company designated electronic access tandem switches.

(2) ATAXXX or FGD is provided as trunk side switching through the use of end office or access tandem switch trunk equipment. The switch trunk equipment is provided with wink start start-pulsing signals and answer and disconnect supervisory signaling, or without signaling when the CCSAC optional feature is specified.

6. Switched Access Service (Cont'd)

6.2 Provision and Description of Switched Access Service (Cont'd)

6.2.4 Access Trunk Arrangement 1OXXX (ATAXXX) and Feature Group D (FGD) (Cont'd)

(A) Description (Cont'd)

(3) ATAXXX or FGD switching is provided with multifrequency address or SS7 signaling. Up to 12 digits of the called party number dialed by the customer's end user using dual tone multifrequency or dial pulse address signals will be provided by Telephone Company equipment to the customer's premises where the Switched Access Service terminates. Such address signals will be subject to the ordinary transmission capabilities of the Switched Transport provided.

(4) ATAXXX or FGD switching, when used in the terminating direction, may be used to access valid NXXs in the LATA, time or weather announcement services of the Telephone Company, community information services of an information service provider, and other customers' services (by dialing the appropriate codes) when such services can be reached using valid NXX codes. When directly routed to an end office, only those valid NXX codes served by that office may be accessed. When routed through an access tandem, only those valid NXX codes served by end offices subtending the access tandem may be accessed. The customer will also be billed additional non-access charges for calls to certain community information services, for which rates are applicable under Telephone Company exchange service tariffs, e.g., 976 (DIAL-IT) Network Service. Additionally, non-access charges will also be billed for calls from a ATAXXX or FGD trunk to another customer's service in accordance with that customer's applicable service rates when the Telephone Company performs the billing function for that customer.

6. Switched Access Service (Cont'd)

6.2 Provision and Description of Switched Access Service (Cont'd)

6.2.4 Access Trunk Arrangement 1OXXX (ATAXXX) and Feature Group D (FGD) (Cont'd)

(A) Description (Cont'd)

(4) (Cont'd)

Calls in the terminating direction will not be completed to 950-0XXX or 950-1XXX access codes, Directory Assistance (411 and 555-1212), service codes 611 and 911 and 10XXX access codes. Calls will be completed to Directory Assistance (NPA-555-1212 or 555-1212) when ATAXXX or FGD switching is combined with Directory Assistance switching. the combination of ATAXXX or FGD Switched Access Service with DA Service is provided as set forth in 9. following. ATAXXX or FGD may not be switched, in the terminating direction, to Switched Access Trunk Arrangements 950, NEA, or XXX or to Switched Access Service Feature Groups B, C or D.

(5) The Telephone Company will establish a trunk group or groups for the customer at end office switches or access tandem switches where ATAXXX or FGD switching is provided. When required by technical limitations, a separate trunk group will be established for each type of ATAXXX or FGD switching arrangement provided. Different types of ATAXXX or FGD or other switching arrangements may be combined in a single trunk group at the option of the Telephone Company.

6. Switched Access Service (Cont'd)

6.2 Provision and Description of Switched Access Service (Cont'd)

6.2.4 Access Trunk Arrangement 10XXX (ATAXXX) and Feature Group D (FGD) (Cont'd)

(A) Description (Cont'd)

(6) The access code for ATAXXX or FGD switching is a uniform access code of the form 10XXX. A single access code will be the assigned number of all ATAXXX or FGD access provided to the customer by the Telephone Company. No access code is required for calls to a customer over ATAXXX or FGD Switched Access Service if the end user's telephone exchange service is arranged for presubscription to that customer, as set forth in 13.3.3 following.

Where no access code is required, the number dialed by the customer's end user shall be a seven or ten digit number for calls in the North American Numbering Plan (NANP). For international calls outside the NANP, a seven to twelve digit number may be dialed. The form of the numbers dialed by the customer's end user is NXX-XXXX, 0 or 1 + NXX-XXXX, NPA + NXX-XXXX, 0 or 1 + NPA + NXX-XXXX, and, when the end office is equipped for International Direct Distance Dialing (IDDD), 01 + CC + NN or 0ll + CC + NN.

When the 10XXX access code is used, ATAXXX or FGD switching also provides for dialing the digit 0 for access to the customer's operator, 911 for access to the Telephone Company's emergency reporting service, or the end-of-dialing digit (#) for cut-through access to the customer's premises.

6. Switched Access Service (Cont'd)

6.2 Provision and Description of Switched Access Service (Cont'd)

6.2.4 Access Trunk Arrangement 101XXXX (ATAXXXX) and Feature Group D (FGD) (Cont'd)

(A) Description (Cont'd)

(7) ATAXXXX or FGD switching will be arranged to accept calls from telephone exchange service locations without the need for dialing 101XXXX uniform access code. Each telephone exchange service line may be marked with a presubscription code to identify which 101XXXX code its calls will be directed to for interLATA service. Presubscription codes are applied as set forth in 13. following.

(8) When the 101XXXX 1+ or 011+ Sent-Paid access code is dialed from a Telephone Company pay telephone to a customer that has not ordered per 6.3.2(B) or (C) following, the calls will be routed to a telephone company recording.

(9) At the option of the customer, the Tandem Signaling optional feature as described in 6.1.2(A) (6) (f) preceding, is available for use on one-way originating feature group D trunks provisioned from an equal access end office to a customer’s point of termination.

(This page filed under Transmittal No. 1)

6. Switched Access Service (Cont'd)

6.2 Provision and Description of Switched Access Service (Cont'd)

6.2.4 Access Trunk Arrangement 10XXXX (ATAXXXX) and Feature Group D (FGD) (Cont'd)

(B) Optional Features

(1) Common Switching Optional Features

(a) Automatic Number Identification (ANI)*
(b) Service Class Routing
(c) Alternate Traffic Routing
(d) Call Gapping Arrangement
(e) Trunk Access Limitation
(f) International Carrier Option
(g) End Office End User Line Service Screening for Use with ATS Access Line Service.
(h) Hunt Group Arrangement for Use with WATS Access Line Service
(i) Uniform Call Distribution Arrangement for Use with WATS Access Line Service
(j) Nonhunting Number for Use with Hunt Group Arrangement or Uniform Call Distribution. Arrangement for Use with WATS Access Line Service
(k) Band Advance Arrangement for Use with WATS Access Line Service
(l) Cut-through
(m) Calling Party Number (CPN)**
(n) Charge Number (CN)
(o) Carrier Selection Parameter (CSP)
(p) Access Transport Parameter (ATP)***

* For ATAXXXX customers (a) will be ordered under 6.8.2 Common Switching Optional Features and BSEs.

** CPN is only available on trunks equipped with CN.

*** ATP is only available on trunks equipped with 64CCC.

6. Switched Access Service (Cont'd)

6.2 Provision and Description of Switched Access Service (Cont'd)

6.2.4 Access Trunk Arrangement 10XXX (ATAXXX) and Feature Group) D (FGD) (Cont'd)

(B) Optional Features (Cont'd)

(2) Transport Termination Optional Features

(a) Operator Trunk, Full Feature Arrangement

(3) Switched Transport Optional Features

(a) Supervisory Signaling (as set forth in 6.1.2(A) (2) (d) preceding)

(b) Common Channel Signaling Access Capability (CCSAC) as set forth in 6.1.2(A)(2)(d) preceding.

(c) 64 Clear Channel Capability (64CCC)(as set forth in 6.1.2.(A)(2)(e) preceding.)

(4) WATS Access Line Termination Optional Features

(a) E & M Supervisory Signaling
(b) Dialed Number Identification Service

(5) Tandem Signaling Optional Feature

(a) CIC and OZZ (as set forth in 6.1.2(A)(6)(f) preceding.

(b) TNS (as set forth in 6.1.2(A)(6)(f) preceding.

(C) Transmission Specifications

ATAXXX or FGD is provided with either Type A, Type B or Type C Transmission Specifications as follows:

When routed directly to the end office either Type B or C is provided.

When routed to an access tandem only Type A is provided.

Type A is provided on the transmission path from the access tandem to the end office.

(This page filed under Transmittal No. 1)

6. Switched Access Service (Cont'd)

6.2 Provision and Description of Switched Access Service (Cont'd)

6.2.4 Access Trunk Arrangement 10XXX (ATAXXX) and Feature Group) D (FGD) (Cont'd)

(C) Transmission Specifications (Cont'd)

Type C Transmission Specifications are provided with Interface Group 1. Type A and Type B Transmission Specifications are provided with Interface Groups 2 through 10.

Type DA Data Transmission Parameters are provided for the transmission path between the customer's premises and the access tandem and between the access tandem and the end office. Type DB Data Transmission Parameters are provided with ATAXKX or FGD for the transmission path between the customer's premises and the end office when directly routed to the end office.

Transmission specifications for the DNAL BSA are set forth in Technical Reference TR-NPL-000335.

(D) Testing Capabilities

ATAXXX or FGD is provided, in the terminating direction where equipment is available, with seven digit access to balance (100 type) test line, milliwatt (102 type) test line, nonsynchronous or synchronous test line, automatic transmission measuring (105 type) test line, data transmission (107 type) test line, loop around test line, short circuit test line and open circuit test line. In addition to the tests described in 6.1.5 preceding, which are included with the installation of service and as ongoing routine testing, Additional Cooperative Acceptance Testing, Additional Automatic Testing and Additional Manual Testing, are available as set forth in 13.3.5 following.

6. Switched Access Service (Cont'd)

6.2 Provision and Description of Switched Access Service (Cont'd)

6.2.5 500, 900 and Toll Free Access Service

(A) 500 Access Service

500 Access Service is an originating offering utilizing trunk side Switched Access Service and is available at appropriately equipped Telephone Company end offices or tandem switches. The service provides a 500 Access Service customer identification function based on the dialed 500 number.

When a 0+500+NXX-XXXX or 1+500+NXX-XXXX call is originated by an end user, the Telephone Company will perform the 500 Access Service customer identification function based on the dialed digits to determine the customer location to which the call is to be routed. If the call originates from an end office switch not equipped to provide the 500 Access Service customer identification function, the call will be routed to an office at which the function is available. Once 500 Access Service customer identification has been established, the call will be routed to the customer. Calls originating in an end office switch in which the customer has not ordered 500 Access Service will be routed to intercept. The 500 Access Service customer has the option to order 0+ 500, 1+ 500 or both. 0+ 500 and 1+ 500 originating calls from 101XXXX, inmate service, toll restricted lines, WATS, Feature Group A and Access Line Arrangement with Call Access Denial will be blocked. 1+500 originating calls from Coin, Prepay, Hotel/Motel ANI 7, Hospital and AT&T Public Access Line will be blocked. If the 500 Access Service customer chooses not to accept a call that the Telephone Company routes, then the 500 Access Service customer is responsible for providing its own blocking and announcement explaining the reason the call cannot be completed. If the 500 Access Service customer accepts 500 calls and subsequently cannot collect from the calling or called party, the Telephone Company is not responsible for the uncollected charges. Calls to 0- will reach a live operator intercept who will give dialing instructions to the calling party to dial 1+ 500 or 0+ 500. International dialing (e.g., 01 and 011+500+NXX-XXXX) will not be accepted for reaching a 500 access service customer.

6. Switched Access Service (Cont'd)

6.2 Provision and Description of Switched Access Service (Cont'd)

6.2.5 500, 900 and Toll Free Access Service (Cont'd)

(A) 500 Access Service (Cont'd)

When 500 Access Service is provided from an end office equipped with equal access capabilities, all such service will be provisioned in accordance with the technical characteristics available with Feature Group D and ATAXXX.

When 500 Access Service is provided from an end office not equipped with equal access capabilities, such service will be provisioned in accordance with the technical characteristics of ATANEA, ATAXXX, or Feature Group C or D.

500 Access Service originating from equal access end offices with the calling party's identification will be provided using access signaling with overlap outpulsing and ten-digit ANI, or with SS7 out of band signaling when the customer has ordered the CCSAC optional feature with Feature Group D or ATAXXX.

500 Access Service originating from a non-equal access end office or handicapped sources routed via operator switched without complete end user identification will be provided using traditional signaling. 500 Access Service traffic will be combined in the same trunk group arrangement with other 500 and non-500 Access Service trafffic unless the customer orders a separate trunk group only for its 500 Access traffic. The customer can obtain a separate trunk group using traditional signaling at the access tandem.

500 Access Service usage measurement shall be in accordance with the regulations set forth in 6.7.6 following for Feature Group D and ATAXXX.

6. Switched Access Service (Cont'd)

6.2 Provision and Description of Switched Access Service (Cont'd)

6.2.5 500, 900 and Toll Free Access Service (Cont'd)

(B) 900 Access Service

900 Access Service is an originating offering utilizing trunk side Switched Access Service or Access Trunk Arrangement. The service provides a customer identification function based on the dialed 900 number at Telephone Company appropriately equipped end offices or tandem switches.

When a 1+900+NXX-XXXX or 0+900+NXX-XXXX call is originated by an end user, the Telephone Company will perform the customer identification function based on the dialed digits to determine the customer location to which the call is to be routed. If the call originates from an end office switch not equipped to provide the customer identification function, the call will be routed to an office at which the function is available. Once customer identification has been established, the call will be routed to the customer. 900 Access Service must be provided from all equal access end offices subtending a tandem. Calls originating in an end office switch in which the customer has not ordered 900 Access Service will be routed to intercept. 900 calls from COIN, 0+, 0-, 101XXXX inmate service, hotel motel and calling card will be blocked. The customer may request via an ASR to the Telephone Company, unblocking of 0+ and 0- 900 calling on all classes of service except inmate.

When 900 Access Service is provided from an end office equipped with equal access capabilities, all such service will be provisioned in accordance with the technical characteristics available with ATAXXXX or Feature Group D.

When 900 Access Service is provided from an end office not equipped with equal access capabilities, such service will be provisioned in accordance with the technical characteristics of ATANEA or ATAXXXX or Feature Group C or D.

6. Switched Access Service (Cont'd)

6.2 Provision and Description of Switched Access Service (Cont'd)

6.2.5 500, 900 and Toll Free Access Service (Cont'd)

(B) 900 Access Service (Cont'd)

900 Access Service originating from equal access end offices with the customer identification function will be provided using exchange access signaling. 900 Access Service originating from end offices not having equal access capability, will be provided using conventional signaling. On traffic using conventional signaling, other than ATANEA or FGC, the customer's facilities shall provide off-hook or answer supervision when the called party answers.

900 Access Service usage measurement shall be in accordance with the regulations set forth in 6.7.6 following for ATANEA, ATAXXX or for Feature Groups C or D.

The Telephone Company will work cooperatively with the customer to implement any network management controls (e.g. call gapping and code blocking) to protect the network from traffic surges due to peaked 900 Access Services. Customer notification of peaked services is required as set forth in 6.6.1(D).

900 Access Service will be available in every LATA.

6. Switched Access Service (Cont'd)

6.2 Provision and Description of Switched Access Service (Cont'd)

6.2.5 500, 900 and Toll Free Access Service (Cont'd)

(C) Toll Free Access Service

Toll Free Access Service is an originating offering utilizing trunk side Switched Access Service or Access Trunk Arrangement. The basic service provides a customer identification function with Area of Service (AOS) routing, based on the dialed Toll Free number, at Telephone Company Toll Free Access Service Switching Points (SSPs). AOS routing is based on originating LATA, NPA, or NPA NXX.

When a Toll Free call is originated from an end user, the Toll Free call is held at the SSP while a query is launched to the Toll Free Service Control Point (SCP). The customer identification with AOS, in the form of SS7 signaling information is passed back from the SCP to the SSP from which the query originated and the call can then be routed to the correct customer location. If the call originates from an end office not equipped to provide the customer identification function, the call will be routed to the SSP equipped Telephone Company access tandem. (SSP Telephone Company equipped central offices are identified in NECA FCC No. 4.) Once customer identification has been established, the call will be routed to the customer for completion. Calls originating from a service area in which the customer has not ordered Toll Free Access Service will be routed to intercept. *

At the option of the customer, the Tandem Signaling optional feature as described in 6.1.2(A)(6)(f) preceding, is available on Toll Free Access Service only in a customer's end office which is also a SSP.

Customers may choose various vertical options in addition to the basic query as described in (1) following.

When Toll Free Access Service is provided from an end office equipped with equal access capabilities, all such service will be provisioned in accordance with the technical characteristics available with ATAXXX or FGD, and will be provided using exchange access signaling.

* Customer identification for Canadian and Caribbean Toll Free numbers will be performed by Six Digit Master List Turnaround.

6. Switched Access Service (Cont'd)

6.2 Provision and Description of Switched Access Service (Cont'd)

6.2.5 500, 900 and Toll Free Access Service (Cont'd)

(C) Toll Free Access Service

Toll Free Access Service measurement will be accordance with the regulations set forth in 6.7.6 following for ATAXXX or for Feature Group D. Toll Free Access Service will be available in every LATA.

Rates and charges associated with Toll Free Access Service Queries and vertical features are described in 6.7.1 following.

(1) Toll Free Access Service Basic Query and Vertical Features

(a) Basic Toll Free Access Service Query

The Basic Toll Free Access Service Query is provided via SSP equipped Telephone Company Central Offices to access the Toll Free Data Base which will provide customer specific identification of the dialed Toll Free number, thus enabling call completion.

(b) Plain Old Telephone Service (POTS) Translation

The POTS Translation optional service may be ordered in conjunction with the Basic Toll Free Access Service Query and will provide the customer a POTS translation of the dialed Toll Free number.

(c) Multiple Destination Routing

The Multiple Destination Routing may be ordered in conjunction with the Basic Toll Free Access Service Query and allows either Toll Free turnaround or POTS translation with Time of Day, Day of Week, Date of Year and/or Per Cent Allocation of Traffic (calls) between subscriber terminations.

(d) Six Digit Master Number List Turnaround

The Six Digit Master Number List Turnaround uses database access for routing six digit Canadian, Caribbean, or special codes which are not part of number portability.

6. Switched Access Service (Cont'd)

6.2 Provision and Description of Switched Access Service (Cont'd)

6.2.6 Network Access Services

(A) Dedicated Network Access Link (DNAL)

(1) Description

The Dedicated Network Access Link (DNAL) provides a dedicated analog data channel between the customer's designated premises and a Telephone company switch or central office for the control of features and functions. The DNAL is primarily used in conjunction with Switched Access or central office based services requiring a separate link for transmitting network signaling or control information. The Switched Access Basic Service Element (ESE) determines the requirement for speed, type and number of DNALS. The DNAL can only be used in conjunction with its respective BSE.

(a) Type 1 DNAL

This Dedicated Network Access Link passes signals which are used by a customer to busy out a predetermined group of lines or trunks. Type 1 DNAL may be ordered as a two- wire or four-wire analog interface and is used in conjunction with the Availability and Stop Hunting Control Arrangement as described in Sec 6.2.6 following. Technical Reference TR-NPL-000335 further defines Type 1 DNAL under Voice Grade 2.

6. Switched Access Service (Cont'd)

6.2 Provision and Description of Switched Access Service (Cont'd)

6.2.6 Network Access Services (Cont'd)

(A) Dedicated Network Access Link (DNAL) (Cont'd)

(1) Description (Cont'd)

(b) Type 2 DNAL

This Dedicated Network Access Link passes signals which are used to report the integrity of a customer's client's line when ordered in conjunction with Alarm Plus as described in Section 6.2.6 following. Technical Reference TR-NPL-000335 further defines Type 2 DNAL under Voice Grade 6.

(2) Optional Features

(a) Availability and Stop Hunting Control Arrangement (BSE)

Availability and Stop Hunting Control Arrangement provides the customer the ability to busy out a predetermined group of lines or trunks. This capability is activated by a customer provided key at the customer premises. The activation signal is transmitted to the Telephone Company's central office via a Type 1 Dedicated Network Access Link (DNAL) as specified in 6.2.6 preceding.

6. Switched Access Service (Cont'd)

6.2 Provision and Description of Switched Access Service (Cont'd)

6.2.6 Network Access Services (Cont'd)

(A) Dedicated Network Access Link (DNAL) (Cont'd)

(2) Optional Features (Cont'd)

(b) Port Access to Verify Integrity of Subscriber Lines (PAVISL) (BSE)

Port Access to Verity Integrity of Subscriber Lines provides the ability for a service provider to monitor the service provider's client's single party exchange access line. The service provider is connected to a telephone-company host computer via Type 2 DNAL. The host computer provides access to a scanning device which is used to repetitively poll the client's Subscriber Terminal Unit (STU). The STU is connected to alarm or monitoring sensors to detect a change in status of the client's exchange access line. The status of the client's exchange access line is then transmitted back to the host computer access port via the service provider's DNAL. The host computer port. access is limited on a first come first serve basis. Two ports are required. PAVISL is offered only where equipment and facilities are compatible and available. The service provider's client must also order the Telephone Company's local exchange service known as Alarm Plus.[sm]

(This page filed under Transmittal No. 1)

6. Switched Access Service (Cont'd)

6.3 Local Switching Optional Features

Following are descriptions of the various optional features that are available in lieu of, or in addition to, the standard features provided with the Feature Groups and Basic Service Arrangements. Some optional features may be non-chargeable when ordered with Feature groups and may be separately rated when ordered with Basic Service Arrangements.

6.3.1 Common Switching

(A) Call Denial on Line or Hunt Group (CAD)

This screening option limits terminating ALA or Feature Group A calls to completion within the LATA where the ALA or Feature Group A line resides. InterLATA and international calls are blocked as well as calls which may potentially terminate outside the LATA. Blocked calls are:

- Operator-handled calls (0-, 00-, 0+, 011+, 01+)
- Calls to 700 NPA codes
- Calls to 950 NXX codes
- Calls to the 900 NPA
- Calls to 976 NXX code
- Calls to 10XXX interLATA
- Calls to 959 NXX code
- Calls to 611 Repair Service
- Calls to 911 Emergency Service

The call denial option allows calls to terminate to any NXX within the LATA served by the ALA or FGA line that doesn't have a special charge associated with it, (exception: 411 or 555-1212). Calls are permitted to 411, 555-1212, 7DZUM, 800 and 7D/10D intraLATA toll.

Blocked calls are routed to a reorder tone or recorded announcement. This feature is provided in all Telephone Company electronic end offices, and where available, in electromechanical end offices. This option is available with Feature Group A or an Access Line Arrangement.

6. Switched Access Service (Cont'd)

6.3 Local Switching Optional Features (Cont'd)

6.3.1 Common Switching (Cont'd)

(B) Service Code Denial on Line or Hunt Group (SCD)

This screening option disallows completion of terminating AlA or Feature Group A calls to local directory assistance (411 and 555-1212), to service codes 611 and 911, and to.local operator assistance (0 and 00-). Blocked calls are routed to a reorder tone or recorded announcement. This feature is provided in all Telephone Company electronic end offices and, where available, in electromechanical end offices. This option is available with Feature Group A or an Access Line Arrangement.

(C) Multiline Hunt Group* or Hunt Group Arrangement HML/HTG)

This option provides the ability to sequentially access one of two or more line side connections in the originating direction, when the access code of the line group is dialed. This feature is provided in all Telephone Company end offices. It is available with an Access Line Arrangement or Feature Group A. ALA or FGA services with different methods of providing off-hook supervisory signalling cannot be mixed in the same hunt group arrangement. When ordered in conjunction with an ALA, this option is a chargeable Basic Service Element as set forth in 6.8.2 following.

* Multiline Hunt Group is the generic name of the ONA Service in Bell Operating Companies ONA Special Report #5.

(This page filed under Transmittal No. 1)

6. Switched Access Service (Cont'd)

6.3.1 Local Switching Optional Features (Cont'd)

6.3.1 Common Switching (Cont'd)

(D) Multiline Hunt Group-UCD Line Hunting* Uniform Call Distribution Arrangement (UCD)

This option provides a type of multiline hunting arrangement which provides for an even distribution of calls among the available lines in a hunt group. Where available, this feature is provided in Telephone Company electronic end offices only. It is available with Feature Group A or an Access Line Arrangement. *When ordered in conjunction with an ALA, this option is a chargeable Basic Service Element as set forth in 6.8.2 following.

(E) Multiline Hunt Group-Individual Access to Each Port in Hunt Group* Nonhunting Number for Use with Hunt Group or Uniform Call Distribution Arrangement (NHN)

This option provides an arrangement for an individual line within a multiline hunt or uniform call distribution group that provides access to that line within the hunt or uniform call distribution group when it is idle or provides busy tone when it is busy, when the nonhunting number is dialed. Where available, this feature is provided in Telephone Company electronic end offices only. It is available with Feature Group A or an Access Line Arrangement. *When ordered in conjunction with an AIA, this option is a Basic Service Element as set forth in 6.8.2. following.

* Multiline Hunt Group–UCD Line Hunting and Multiline Hunt Group–Individual Access to each port in hunt group are the generic name of the ONA service in Bell Operating Companies ONA Special Report #5.

(This page filed under Transmittal No. 1)

6. Switched Access Service (Cont'd)

6.3 Local Switching Optional Features (Cont'd)

6.3.1 Common Switching (Cont'd)

(F) Automatic Number Identification (ANI)

(1) This option provides the automatic transmission of a seven or ten digit number and information digits to the customer designated premises for calls originating in the LATA, to identify the calling station. The ANI feature is an end office software function which is associated on a call-by-call basis with

(a) all individual transmission paths in a trunk group routed directly between an end office and a customer designated premises or, where technically feasible, with

(b) all individual transmission paths in a trunk group between an end office and an access tandem, and a trunk group between an access tandem and a customer designated premises.

(2) The seven digit ANI telephone number is available with ATA950 and ATANEA or Feature Groups B and C. With these Access Arrangements or Feature Groups, technical limitations may exist in Telephone Company switching facilities which require ANI to be provided only on a directly trunked basis. ANI will be transmitted on all calls except those originating from multiparty lines and pay telephones using ATA950 or Feature Group B, or when an ANI failure has occurred.

6. Switched Access Service (Cont'd)

6.3 Local Switching Optional Features (Cont'd)

6.3.1 Common Switching (Cont'd)

(F) Automatic Number Identification (ANI) (Cont'd)

(3) The ten digit ANI Calling Billing Number Delivery - FGD Protocol* telephone number is only available with ATAXXX or ATAXXX with the CCSAC Optional Feature or Feature Group D. When the CCSAC optional feature is specified, the customer may obtain an ANI equivalent by ordering the Charge Number optional feature, as described in 6.3.1(Z), following. The ten digit ANI telephone number consists of the Numbering Plan Area (NPA) plus the seven digit ANI telephone number. The ten digit ANI telephone number will be transmitted on all calls except those identified as multiparty line or ANI failure, in which case only the NPA will be transmitted (in addition to the information digit described below). When ordered in conjunction with ATAXXX, this option is a chargeable Basic Service Element as set forth in 6.8.2 following.

(4) With ATANEA or Feature Group C, at the option of the customer, ANI may be ordered from end offices where Telephone Company recording for end user billing is not provided.

(5) ANI is not provided from end offices where the Telephone Company forwards ANI to its recording equipment. Where ANI cannot be provided, e.g., on calls from 4 and 8 party services, information digits will be provided to the customer.

The information digits identify:

(a) telephone number is the station billing number - no special treatment required,

*Calling Billing Number Delivery-FGD Protocol is the generic name of the ONA Service in Bell Operating Companies ONA Special Report #5.

(This page filed under Transmittal No. 1)

6. Switched Access Service (Cont'd)

6.3 Local Switching Optional Features (Cont'd)

6.3.1 Common Switching (Cont'd)

(F) Automatic Number Identification (ANI) (Cont'd)

(5) (Cont'd)

(b) multiparty line - telephone number is a 4- or 8-party line and cannot be identified number must be obtained via an operator or in some other manner,
(c) ANI failure has occurred in the end office switch which prevents identification of calling telephone number - must be obtained by operator or in some other manner,
(d) hotel motel originated call which requires room number identification,
(e) coinless station, hospital, inmate, etc. call which requires special screening or handling by the customer, and
(f) call is an Automatic Identified Outward Dialed (AIOD) call from customer premises equipment. The ANI telephone number is the listed telephone number of the customer and is not the telephone number of the calling party.

These ANI information digits are available with Feature Groups B, C, and D and Access Trunk Arrangements.

(This page filed under Transmittal No. 1)

6. Switched Access Service (Cont'd)

6.3 Local Switching Optional Features (Cont'd)

6.3.1 Common Switching (Cont'd)

(G) Up to 7 Digit Outpulsing of Access Digits to Customer (USDO)

This option provides for the end office capability of providing up to 7 digits of the uniform access code (950-0XXX, 950-lXXX) to the customer designated premises. The customer can request that only some of the digits in the access code be forwarded. The access code digits would be provided to the customer designated premises using multifrequency signaling, and transmission of the digits would precede the forwarding of ANI if that feature were provided. It is available with Feature Group B or ATA950.

(H) Cut-Through (CTO)

This option allows end users of the customer to reach the customer's premises by using the end of dialing digit (#). This option provides for connection of the call to the premises of the customer indicated by the 1OXXX code upon receipt of the end of dialing digit (#). The Telephone Company will not record any other dialed digits for these calls. This option is available with Feature Group D or ATAXXX.

6. Switched Access Service (Cont'd)

6.3 Local Switching Optional Features (Cont'd) (T)

6.3.1 Common Switching (Cont'd)

(I) Delay Dial Start-Pulsing Signaling (DDSP) (T)

This option provides a method of indicating to the near end trunk circuit readiness to accept address signaling information by the far end trunk circuit. Delay dial is often referred to as an off-hook, on-hook signaling sequence. The delay dial signal is the off-hook interval and the start-pulsing signal is the on-hook interval. With integrity check, the calling office will not outpulse until a delay dial (off-hook) signal followed by a start-pulsing (on-hook) signal has been identified at the calling office. This option is available with Feature Group C or ATANEA.

(J) Immediate Dial Pulse Address Signaling (ADS IDP)

This option provides for the forwarding of dial pulses from the Telephone Company end office to the customer without the need of a start-pulsing signal from the customer. It is available with Feature Group C or ATANEA.

(K) Dial Pulse Address Signaling (ADS DP)

This trunk side option provides for the transmission of number information, e.g., called number, between the end office switching system and -the customer designated premises (in either direction) by means of direct current pulses. It is available with Feature Group C or ATANEA.

(This page filed under Transmittal No. 4)

6. Switched Access Service (Cont'd)

6.3 Local Switching Optional Features (Cont'd)

6.3.1 Common Switching (Cont'd)

(L) Service Class Routing (SCRT)

This option provides the capability of directing originating traffic from an end office to a trunk group to a customer designated premises, based on the line class of service (e.g., coin, multiparty or hotel/motel), service prefix indicator (e.g., 0-, 0+, 01+ or 011+) or service access code (e.g., 500, 800 or 900). It is provided in suitably equipped end office or access tandem switches and is available with Feature Groups C and D or ATANEA and ATAXXX.

(M) Alternate Traffic Routing (ARTG)

(1) Multiple Customer Premises Alternate Routing

This option provides the capability of directing originating traffic from an end office (or appropriately equipped access tandem) to a trunk group (the "high usage" group) to a customer designated premises until that group is fully loaded, and then delivering additional originating traffic (the "overflowing" traffic) from the same end office or access tandem to a different trunk group (the "final" group) to a second customer designated premises. The customer shall specify the last trunk CCS desired for the high usage group. It is provided in suitably equipped end office or access tandem switches and is available with Feature Groups B, C and D and Access Trunk Arrangements.

(2) End Office Alternate Routing When Ordered in Trunks

This option provides an alternate routing arrangement for customers who order originating traffic in trunks and these trunks serve an end office via two routes: one route via an access

6. Switched Access Service (Cont'd)

6.3 Local Switching Optional Features (Cont'd)

6.3.1 Common Switching (Cont'd)

(M) Alternate Traffic Routing (ARTG) (Cont'd)

(2) End Office Alternate Routing When Ordered in Trunks (Cont'd)

tandem and one direct route. The feature allows the customer originating traffic from the end office to be offered first to the direct trunk group and then overflow to the access tandem group. It is provided in suitably equipped end offices and is available with Feature Groups B, C and D and Access Trunk Arrangements.

Alternate routing is not available with the Tandem Signaling optional feature as described in Section 6.1.2(A)(6)(f), preceding.

(N) Trunk Access Limitation (CHOK)

This option provides for the routing of originating 900 service calls to a specified number of transmission paths in a trunk group, in order to limit (choke) the completion of such traffic to the customer. Calls to the designated service which could not be completed over the subset of transmission paths in the trunk group, i.e., the choked calls, would be routed to reorder tone. It is provided in all Telephone Company electronic end offices and where available in electromechanical end offices. It is available with Feature Groups C and D or ATANEA and ATAXXX. Either Trunk Access Limitation, or Call Gapping Arrangement, 6.3.1(O), following, should be used with originating 900 Service where a concentrated high volume of 900 calling is expected. The Telephone Company will work cooperatively with the customer to determine when such options may be necessary.

6. Switched Access Service (Cont'd)

6.3 Local Switching Optional Features (Cont'd)

6.3.1 Common Switching (Cont'd)

(O) Call Gapping Arrangement (CGAP)

This option, provided in suitably equipped end office switches, provides for the routing of originating calls to 900 service to be switched in the end office to all transmission paths in a trunk group at a prescribed rate of flow, e.g., one call every five seconds, in order to limit (choke) the completion of such traffic to the customer. This option is activated at the request of the customer during normal business hours, i.e., 8:00 a.m. to 5:00 p.m. In addition, this option may be activated for no longer than a 24 hour period. Calls to the designated service which are denied access by this feature, i.e., the choked calls, would be routed to a no-circuit announcement. It is provided in selected ATAXXX or Feature Group D equipped end offices and is available only with ATAXXX or Feature Group D. Either Trunk Access Limitation, 6.3.1(N) preceding, or Call Gapping Arrangement should be used with originating 900 Service where a concentrated high volume of 900 calling is expected. The Telephone Company will work cooperatively with the customer to determine when such options may be necessary.

6. Switched Access Service (Cont'd)

6.3 Local Switching Optional Features (Cont'd)

6.3.1 Common Switching (Cont'd)

(P) International Carrier Option (INCO)

This option allows for ATAXXXX or Feature Group D end offices or access tandem switches equipped for International Direct Distance Dialing to be arranged to forward the international calls of one or more international carriers to the customer (i.e., the Telephone Company is able to route originating international calls to a customer other than the one designated by the end user either through presubscription or 101XXXX dialing). This arrangement requires provision of written verification to the Telephone Company that the customer is authorized to forward such calls. The written verification must be in the form of a letter of agency authorizing the customer to order the option on behalf of the international carrier. This option is only provided at Telephone Company end offices or access tandems equipped for International Direct Distance Dialing. It is available with Feature Group D or ATAXXXX.

(Q) Band Advance Arrangement for Use with WATS Access Line Service (BAAD)*

This option, which is provided in association with two or more Special Access Service groups, provides for the automatic overflow of terminating calls to a WATS Access Line Service group, when that group has exceeded its call capacity to another WATS Access Line Service group with a band designation equal to or greater than that of the overflowing WATS Access Line Service group. Band Advance will only be provided from one WATS Access Line Service group to another WATS Access Line Service group of the same IC. This arrangement does not provide for call overflow from a group with a higher band designation to one with a lower one. This option is available with Feature Groups A, B, C, D and all Access Line and Trunk Arrangements.

* This optional feature is not available with unbanded services such as UWAL.

(This page filed under Transmittal No. 1)

6. Switched Access Service (Cont'd)

6.3 Local Switching Optional Features (Cont'd)

6.3.1 Common Switching (Cont'd)

(R) End Office End User Line Service Screening for Use with Originating Only WATS Access Line Service (BAND)

This option provides the ability to verify that an end user has dialed a called party address (by screening the called NPA and or NXX on the basis of geographical bands selected by the Telephone Company) which is in accordance with that end user's service agreement with the customer, e.g., WATS. This option is provided in all Telephone Company electronic end offices and, where available, in electromechanical end offices in which WATS Access Line Service is provided. It is available with Feature Groups C and D or ATANEA and ATAXXX.

(S) Hunt Group Arrangement for Use with WATS Access Line Service (HML HTG)

This option provides the ability to sequentially access one of two or more WATS Access Line Services (e.g., 800 Service access lines) in the terminating direction, when the hunting number of the WATS Access line group is forwarded from the customer to the Telephone Company. This feature is provided in all Telephone Company end offices in which WATS Access Line Service is provided. It is available with Feature Groups A, B, C, D and all Access Line and Trunk Arrangements.

6. Switched Access Service (Cont'd)

6.3 Local Switching Optional Features (Cont'd)

6.3.1 Common Switching (Cont'd)

(T) Uniform Call Distribution Arrangement for Use with WATS Access Line Service (HYT UD)

This option provides a type of multiline hunting arrangement which provides for an even distribution of terminating calls among the available Special Access Services utilized in the provision of WATS or WATS-type Services in the hunt group. Where available, this feature is only provided in Telephone Company designated WATS Serving Offices. It is available with Feature Groups A, B, C, D and all Access Line and Trunk Arrangements.

(U) Nonhunting Number for Use with Hunt Group Arrangement or Uniform Call Distribution Arrangement for Use with WATS Access Line Service (NHN)

This option provides an arrangement for an individual Special Access Service utilized in the provision of WATS or WATS-type Services within a multiline hunt or uniform call distribution group that provides access to that Special Access Service within the hunt or uniform call distribution group when it is idle or provides busy tone when it is busy, when the nonhunting number is dialed. Where available, this feature is only provided in Telephone Company designated WATS Serving Offices. It is available with Feature Groups A, B, C, D and all Access Line and Trunk Arrangements.

(V) Flexible Automatic Number Identification

(1) This option is an enhancement to Automatic Number Identification (ANI) and facilitates information digits not available with ANI. The Flexible ANI feature allows the utility to associate new ANI information digit assignments with originating routing and screening translations as they are assigned by the North American Numbering Plan (NANP).

6. Switched Access Service (Cont'd)

6.3 Local Switching Optional Features (Cont'd)

6.3.1 Common Switching (Cont'd)

(V) Flexible Automatic Number Identification (Cont'd)

(2) Flexible ANI is only available on Feature Group D or ATAXXX, in equal access end offices where technically feasible, and will work in conjunction with ten digit ANI (as previously described in 6.3.1.F).

(3) When a customer orders Flexible ANI, all available ANI digits will be delivered. A customer may not specify individual digits.

The information digits identify:

(a) 52 - Outward Wide Area Telecommuncations Service (OUTWATS) routed via a combined WATS-POTS trunk group,

(b) 93 - Originating call is a private virtual network type of service call.

(W) Call Transfer*

This option permits a customer who has established a call using an Access Line Arrangement to add another party to the call to establish a three-way conference call. Once the three-way conference call has been established, the customer may drop its connection without disconnecting the other two parties and may use its service to make another call. In addition, a customer may hold a second call while maintaining privacy from the first call. This feature, available with ALA, is provided from suitably equipped Telephone Company offices.

*Call Transfer is also known as Three Way Call Transfer in Bell Operating Companies ONA Special Report #5.

(This page filed under Transmittal No. 1)

6. Switched Access Service (Cont'd)

6.3 Local Switching Optional Features (Cont'd)

6.3.1 Common Switching (Cont'd)

(X) Direct Inward Dialing (DID)

Direct Inward Dialing Service is offered with Access line Arrangement (ALA) only. Up to seven-digit outpulsing of the called telephone number is provided to the customer premises. The number of digits forwarded by the central office switch is determined at the time the service is ordered.

Due to the absence of central office switch measurement capabilities, assumed minutes of use as described in 6.7.6 (A) following are applied for lineside Basic Serving Arrangements (BSAs) used in conjunction with DID BSE.

Terminating service is not provided. Other Lineside BSA features or BSEs, except DID Trunk Queuing BSE are not available in conjunction with this BSE.

(Y) Calling Party Number (CPN)

This option provides for the automatic transmission of the calling party's ten-digit telephone number to the customer's premises for calls originating in the LATA. The ten-digit telephone number consists of the NPA plus the seven-digit telephone number, which may or may not be the same as the calling station's charge number. The ten digit telephone number will be coded as presented, or restricted via a "Privacy Indicator" for delivery to the called end user. The specific protocol for CPN is described in Bellcore Common Channel Signaling Network Specification Technical Reference TR-TSV-000905. This feature is available only with originating FGD or ATAXXX when the CCSAC optional feature is specified.

6. Switched Access Service (Cont'd)

6.3 Local Switching Optional Features (Cont'd)

6.3.1 Common Switching (Cont'd)

(Z) Charge Number (CN)

This option provides for the automatic transmission of the ten-digit billing number of the calling station and originating line information. The specific protocol for CN is described in Bellcore Common Channel Signaling Network Specification Technical Reference TR-TSV-000905. This feature is available with originating FGD when the CCSAC optional feature is specified. This feature is also available with originating FGD or ATAXXX when the CCSAC optional feature is specified as a chargeable Basic Service Element as described in 6.8.2(B) following. CN is the SS7 out of band signaling equivalent of ANI with multifrequency address signaling, as described in 6.3.1(F) preceding.

(AA) Carrier Selection Parameter (CSP)

This option provides for the automatic transmission of a signaling indicator which signifies to the customer whether the call being processed originated from a presubscribed end user of that customer. The specific protocol for CSP is described in Bellcore Common Channel Signaling Network Specification Technical Reference TR-TSV-000905. This feature is available only with originating FGD or ATAXXX when the CCSAC optional feature is specified.

(AB) Answer Supervision - Lineside BSE

Answer supervision - lineside provides the capability to deliver "off hook" supervisory signals from the terminating central office switch to a lineside interface at the originating central office switch. These signals indicate when the called station has answered an incoming call. Answer supervision will only be provided in RENONV02* on a trial basis for 18 months and is available with FGA or ALA service.

(This page filed under Transmittal No. 1)

6. Switched Access Service (Cont'd)

6.3 Local Switching Optional Features (Cont'd)

6.3.1 Common Switching (Cont'd)

(AC) Access Transport Parameter (ATP)

This option provides for the transmission of Integrated Services Digital Network (ISDN)/SS7 call set-up information from the originating Switch to the customer's premises and, on terminating access from the customer's premises to the terminating switch. This option is available only with FGD or ATAXXX with CCSAC where technical capabilities exist. The specific protocol for ATP is specified in technical reference TR-TSV-000962.

(This page filed under Transmittal No. 1)

6. Switched Access Service (Cont'd)

6.3 Local Switching Optional Features (Cont'd)

6.3.2 Transport Termination

(A) Rotary Dial Station Signaling

This option provides for the transmission of called party address signaling from rotary dial stations to the customer designated premises for originating calls. This option is provided in the form of a specific type of Transport Termination. It is available with Feature Group B or ATA950, only on a directly trunked basis.

(B) Operator Trunk - Modified Operator Service (MOS) - Coin, Non-Coin, or Combined Coin and Non-Coin

This option may be ordered to provide coin, non-coin, or combined coin and non-coin operation. It is available with ATANEA, ATAXXX, Feature Group C and D and is provided in electronic end offices and other Telephone Company end offices where equipment is available. It is provided as a trunk type of Transport Termination.

Coin:

This arrangement provides for initial coin return control and routing of 0+, 0-, 1+, 01+ or 011+ prefixed originating coin calls requiring operator assistance to the customer designated premises. Because operator assisted coin calling traffic is routed over a trunk group dedicated to operator assisted calls, this arrangement is only provided in association with the Service Class Routing option.

6. Switched Access Service (Cont'd)

6.3 Local Switching Optional Features (Cont'd)

6.3.2 Transport Termination (Cont'd)

(B) Operator Trunk - Modified Operator Service (MOS) - Coin, Non-Coin, or Combined Coin and Non-Coin (Cont'd)

The operator assistance coin calling arrangement is also normally ordered by the customer in conjunction with the ANI optional feature. The trunk groups equipped with this arrangement will be terminated at the customer's specific location.

Non-Coin:

This arrangement provides for the routing of 0+, 0-, 1+, 01+ or 011+ prefixed originating non-coin calls requiring operator assistance to the customer designated premises. Because operator assisted non-coin calling traffic is routed over a trunk group dedicated to operator assisted calls, this arrangement is only provided in association with the Service Class Routing option.

The operator assistance non-coin calling arrangement is also normally ordered by the customer in conjunction with the ANI optional feature. The trunk groups equipped with this arrangement will be terminated at the customer's specified location. When so equipped, the ANI feature provides for the forwarding

6. Switched Access Service (Cont'd)

6.3 Local Switching Optional Features (Cont'd)

6.3.2 Transport Termination (Cont'd)

(B) Operator Trunk - Modified Operator Service (MOS) Coin, Non-Coin, or Combined Coin and Non-Coin (Cont'd)

of information digits which identify that the call has originated from a hotel or motel, and whether room number identification is required, or that special screening is required, e.g., for coinless public stations, dormitory or inmate stations, or other screening arrangements agreed to between the customer and the Telephone Company.

Combined Coin and Non-Coin:

This arrangement provides for initial coin return control and routing of 0+, 0-, 1+, 01+ or 011+ prefixed originating operator assisted coin and non-coin calls requiring operator assistance to the customer designated premises. Because operator assisted coin and non-coin calling traffic is routed over a trunk group dedicated to operator assisted calls, this arrangement is only provided in association with the Service Class Routing option.

This arrangement is normally ordered by the customer in conjunction with the ANI optional feature. The trunk groups equipped with this arrangement will be terminated in the customer's specified location. When so equipped, the ANI optional feature provides for the forwarding of information digits which identify that the call has originated from a hotel or motel, and whether room number identification is required, or that special screening is required, e.g., for coinless pay telephones, dormitory or inmate stations, or other screening arrangements agreed to between the customer and the Telephone Company.

6. Switched Access Service (Cont'd)

6.3 Local Switching Optional Features (Cont'd)

6.3.2 Transport Termination (Cont'd)

(B) Operator Trunks - Modified Operator Services (MOS) - Coin, Non-Coin, or Combined Coin and Non-Coin (Cont'd)

This option provide the operator function available in the end office to the customer's specified location. These functions are (1) Operator Release, (2) Operator Attached, (3) Coin Collect, (4) Coin Return, (5) Ring Back. It is available from the Telephone Company's equal access end office to the customer's specified location. This option is not available in combination with the CCSAC optional feature.

(C) Operator Trunk - Exchange Access Operator Service Systems (EAOSS)

This option provides the operator functions available in the end office to the customer's specified location for Coin 1+, 01+, 011+, 0+ and 0-. These functions are (1) Operator Released, (2) Operator Attached, (3) Coin Collect, (4) Coin Return, and (5) Ringback. It is available with ATAXXX or Feature Group D and is provided as a trunk type of Transport Termination from the Telephone Company's coin tandem or direct from the equal access end office to the customer's specified location, where technically feasible.

6.3.3 WATS Access Line Termination

The WATS Access Line Termination are differentiated by line side vs. trunk side terminations. The standard WATS Access Line arrangement is available with a line side termination. There are various types of originating, terminating and two way line side terminations depending on the type of signaling associated with the WATS Access Line; (i.e., loop start or ground start). Line side terminations are available with either dial pulse or dual tone multifrequency address signaling.

(This page filed under Transmittal No. 1)

6. Switched Access Service (Cont'd)

6.3 Local Switching Optional Features (Cont'd)

6.3.3 WATS Access Line Termination

Available nonchargeable line sides and trunk side terminations can be found in Technical Reference TR-NPL-000334.

In addition, there are also various types of originating, terminating and two way WATS Access line trunk side terminations that are available in lieu of standard line side terminations. Trunk side terminations are provided only in association digital (i.e., DS1) WATS Access Line Service or with certain Line Termination optional features as specified following:

(A) Line Termination Optional Features for Trunk Side Connections

The Telephone Company will at the option of the customer, provide the following Line Termination optional features in association with WATS Access Lines Service.

(1) E&M Supervisory Signaling

The E&M Supervisory Signaling optional feature, which is available with four-wire originating, terminating and two way WATS Access Lines, provides for E&M Type 1, Type 2 or Type 3 Supervisory Signaling in lieu of loop start or ground start Supervisory Signaling.

Dialed Number Identification Services (DNIS)

The Dialed Number Identification Service optional feature, which is available with terminating only and two way WATS Access Lines, permits a customer's end

(This page filed under Transmittal No. 1)

6. Switched Access Service (Cont'd)

6.3 Local Switching Optional Features (Cont'd)

6.3.3 WATS Access Line Termination (Cont'd)

(A) Line Termination Optional Features for Trunk Side Connections (Cont'd)

(2) Dialed Number Identification Services (DNIS) (Cont'd)

user with multiple 800 Service telephone numbers in the same service group to identify the specific telephone number which was dialed by the calling party. Identification is accomplished by outpulsing four digits which distinguish the dialed 800 Service number to customer premises equipment at the end user's premises. The digits are outpulsed to the end user premises over the WATS Access Lines. All WATS Access Lines in the same service group must be equipped for DNIS. The number of dialable 800 Service telephone numbers accessing a service group equipped for DNIS cannot exceed the number of WATS Access Lines in the service group. DNIS is provided with either reverse battery or E&M type supervisory signaling as follows:

Reverse Battery:	Two-Wire, terminating only Four-Wire, terminating only
E&M:	Four-Wire, terminating only Four Wire, two way

(3) WATS Answer Supervision

The WATS Answer Supervision optional feature, which is available with originating only and two way WATS Access Lines, provides a signal to customer premises equipment at the end user premises that indicates that the called end user has answered, when such indication is provided by the interexchange carrier. Answer Supervision is provided with either reverse battery or E&M type supervisory signaling as follows:

6. Switched Access Service (Cont'd)

6.3 Local Switching Optional Features (Cont'd)

6.3.3 WATS Access Line Termination (Cont'd)

(3) WATS Answer Supervision (Cont'd)

Reverse Battery:	Two-Wire, originating only
E&M:	Four-Wire, originating only
	Four Wire, two way

(This page filed under Transmittal No. 1)

6. Switched Access Service (Cont'd)

6.4 Transmission Specifications

Each Switched Access Service transmission path is provided with standard transmission specifications. There are three different standard specifications (Types A, B and C). The standard for a particular transmission path is dependent on the Basic Service Arrangement or Feature Group, the Interface Group and whether the service is directly routed or via an access tandem. The available transmission specifications are set forth in 15.2.1 following. Data Transmission Parameters are also provided with each Switched Access Service transmission path. The Telephone Company will, upon notification by the customer that the data parameters set forth in 15.2.2(A), 15.2.2(B), or 15.2.2(C) are not being met, conduct tests independently or in cooperation with the customer, and take any necessary action to insure that the data parameters are met.

The Telephone Company will maintain existing transmission specifications on functioning service configurations installed prior to May 25, 1984 except that service configurations having performance specifications exceeding the standards listed in this provision will be maintained at performance levels specified in this tariff.

The transmission specifications concerning Switched Access Service are immediate action limits and are set forth in 15.2 following. Acceptance limits are set forth in Technical Reference TR-NPL-000334. This Technical Reference also provides the basis for determining Switched Access Service maintenance limits.

Transmission specifications for SS7 Signaling Connections are set forth in Bellcore Common Channel Signaling Network Specifications Technical Reference TR-TSV-000905.

Transmission specifications for FGD or ATAXXX with CCSAC and the 64CCC optional feature are set forth in Technical Reference TR-NWT-000938.

6. Switched Access Service (Cont'd)

6.5 Obligations of the Telephone Company

In addition to the obligations of the Telephone Company set forth in 2. preceding, the Telephone Company has certain other obligations pertaining only to the provision of Switched Access Service. These obligations are as follows:

6.5.1 Network Management

The Telephone Company will administer its network to insure the provision of acceptable service levels to all telecommunications users of the Telephone Company's network services. Generally, service levels are considered acceptable only when both end users and customers are able to establish connections with little or no delay encountered within the Telephone Company network. The Telephone Company maintains the right to apply protective controls, i.e., those actions, such as call gapping, which selectively cancel the completion of traffic, over any traffic carried over its network, including that associated with a customer's Switched Access Service. Generally, such protective measures would only be taken as a result of occurrences such as failure or overload of Telephone Company or customer facilities, natural disasters, mass calling or national security demands. In the event that the protective controls applied by the Telephone Company result in the complete loss of service by the customer, the customer will be granted a Credit Allowance for Service Interruption as set forth in 2.4.4(B)(3) preceding.

The Telephone Company SS7 signaling network will provide management functions as described in detail in Bellcore Common Channel Signaling Network Specifications Technical Reference TR-TSV-000905.

(This page filed under Transmittal No. 1)

6. Switched Access Service (Cont'd)

6.5 Obligations of the Telephone Company

6.5.2 Design and Traffic Routing of Switched Access Service

For ATANEA and ATAXXX or Feature Groups C and D, the Telephone Company shall design and determine the routing of Switched Access Service, including the selection of the first point of switching and the selection of facilities from the interface to any switching point and to the end offices where busy hour minutes of capacity are ordered. The Telephone Company shall also decide if capacity is to be provided by originating only, terminating only, or two-way trunk groups. Finally, the Telephone Company will decide whether trunk side access will be provided through the use of two-wire or four-wire trunk terminating equipment. Selection of facilities and equipment and traffic routing of the service are based on standard engineering methods, available facilities and equipment, and the Telephone Company traffic routing plans. If the customer desires routing or directionality different from that determined by the Telephone Company, the Telephone Company will work cooperatively with the customer in determining (1) whether the service is to be routed directly to an end office or through an access tandem switch and (2) the directionality of the service.

6. Switched Access Service (Cont'd)

6.5 Obligations of the Telephone Company (Cont'd)

6.5.2 Design and Traffic Routing of Switched Access Service (Cont'd)

For ALA and ATA950 or Feature Groups A and B, the line or trunk directionality and traffic routing of the Switched Access Service between the customer's premises and the entry switch are determined by the customer's order for service. Additionally, for ATA950 or Feature Group B the customer may order the optional feature Customer Specification of Local Transport Termination.

6.5.3 Provision of Service Performance Data

Subject to availability, end-to-end service performance data available to the Telephone Company through its own service evaluation routines, may also be made available to the customer based on previously arranged intervals and format. These data provide information on overall end-to-end call completion and non-completion performance, e.g., customer equipment blockage, failure results and transmission performance. These data do not include service performance data which are provided under other tariff sections, e.g., testing service results. If data are to be provided in other than paper format, the charges for such exchange will be determined on an individual case basis.

6.5.4 Trunk Group Measurement Reports

Subject to availability, the Telephone Company will make available trunk group data in the form of usage in CCS, peg count and overflow, to the customer based on previously agreed to intervals.

6. Switched Access Service (Cont'd)

6.5 Obligations of the Telephone Company (Cont'd)

6.5.5 Determination of Number of Transmission Paths

For ALA and ATA950 or Feature Groups A and B, which are ordered on a per line or per trunk basis respectively, the customer specifies the number of transmission paths in the order for service. For DNALs, the customer will specify the number of channels.

The Telephone Company will determine the number of Switched Access Service transmission paths to be provided for the ATANEA and ATAXXX or Switched Access Feature Group C and D busy hour minutes of capacity ordered. A transmission path is a communication path within the frequency bandwidth of approximately 300 to 3000 Hz or a derived communication path of a frequency bandwidth of approximately 300 Hz to 3000 Hz provided over a high frequency analog facility or a high speed digital facility between a customer's premises and a Telephone Company location. The number of transmission paths will be developed using the total busy hour minutes of capacity by type (as described in 6.1.1(E) preceding) for the end offices for each Basic Service Arrangement or Feature Group ordered from a customer's designated premises. The total busy hour minutes of capacity by type for the end office will be converted to transmission paths using standard Telephone Company traffic engineering methods. The number of transmission paths provided shall be the number required based on (1) the use of access tandem switches and end office switches, (2) the use of end office switches only, or (3) the use of tandem switches only.

6. Switched Access Service (Cont'd)

6.5 Obligations of the Telephone Company (Cont'd)

6.5.6 Determination of Number of End Office Transport Terminations

For analog entry switches, a termination will be provided for each transmission path provided. For digital entry switches, an equivalent termination will be provided for each transmission path provided.

6.5.7 Design Blocking Probability

The Telephone Company will cooperate in the design of the number of the facilities used in the provision of Switched Access Service. The Telephone Company will monitor the facilities used in the provision of Switch Access Services to meet the blocking probability criteria as set forth in (A) through (F) following.

(A) For ALA and ATA950 or Feature Groups A and B, and DNALs no design blocking criteria apply.

(B) For ATANEA or Feature Group C, the design blocking objective will be no greater than one percent (.01) between the point of termination at the customer's designated premises and the first point of switching when traffic is directly routed without an alternate route. Standard traffic engineering methods will be used by the Telephone Company to determine the number of transmission paths required to achieve this level of blocking.

(C) For ATAXXX or Feature Group D, the design blocking objective will be no greater than one percent (.01) between the point of termination at the customer's designated premises and the end office switch, whether the traffic is directly routed without an alternate route or routed

6. Switched Access Service (Cont'd)

6.5 Obligations of the Telephone Company (Cont'd)

6.5.7 Design Blocking Probability (Cont'd)

(C) (Cont'd)

via an access tandem. Standard traffic engineering methods as set forth in reference document Technical Reference PUB TREOP-000178 Trunk Traffic Engineering Concepts and Applications (Chapters 6-7) will be used by the Telephone company to determine the number of transmission paths required to achieve this level of blocking.

(D) For Entrance Facility no design blocking criteria apply. For Direct Trunked transport used in provision of ALA, ATA950 and Feature Groups A and B, no design blocking criteria apply. For Direct Trunked transport used in provision of ATAXXX and Feature Groups C and D, the design blocking objective is the same as for the ATAXXX or Feature Group C or D using the facility. For Tandem Switched Facility, the design blocking objective is the same as for the ALA, ATA or Feature Group using the facility.

(E) The design blocking criteria for 500,800 or 900 Access Service provided from an end office not equipped with equal access capabilities will be equivalent to that set forth preceding for ATANEA or Feature Group C except when more than one tandem is employed in the transport of a 500, 800 or 900 Access Service call. The design blocking criteria for 500, 800 or 900 Access Service provided from an end office equipped with equal access capabilities will be equivalent to that set forth preceding for ATAXXX or Feature Group D except when more than one tandem is employed in the transport of an 800 Access Service call. For 900 Access Service, where trunk access limitation as set forth in 6.3.1.(N) is applicable, design blocking criteria does not apply.

(This page filed under Transmittal No. 1)

6. Switched Access Service (Cont'd)

6.5 Obligations of the Telephone Company (Cont'd)

6.5.7 Design Blocking Probability (Cont'd)

(F) The Telephone Company will perform routine measurement functions except on ALA and ATA950 or Feature Groups A and B to assure that an adequate number of transmission paths are in service. The Telephone Company will recommend that additional capacity (i.e., trunks) be ordered by the customer when additional paths are required to reduce the measured blocking to the designed blocking level. For the capacity ordered, the design blocking objective is assumed to have been met if the routine measurements show that the measured blocking does not exceed the threshold listed in the following tables.

(1) For transmission paths carrying only first routed traffic direct between an end office and customer's designated premises without an alternate route, and for paths carrying only overflow traffic, the measured blocking thresholds are as follows:

Number of Transmission Paths Per Trunk Group	Measured Blocking Thresholds in the Time Consistent Busy Hour for the Number of Measurements Taken Between 8:00 a.m. and 11:00 p.m. Per Trunk Group			
	15-20 Measurements	11-14 Measurements	7-10 Measurements	3-6 Measurements
2	.070	.080	.090	.140
3	.050	.060	.070	.090
4	.050	.060	.070	.080
5-6	.040	.050	.060	.070
7 or more	.030	.035	.040	.060

(This page filed under Transmittal No. 1)

6. Switched Access Service (Cont'd)

6.5 Obligations of the Telephone Company (Cont'd)

6.5.7 Design Blocking Probability (Cont'd)

(F) (Cont'd)

(2) For transmission paths carrying first routed traffic between an end office and customer's premises via an access tandem, the measured blocking thresholds are as follows:

Number of Transmission Paths Per Trunk Group	Measured Blocking Thresholds in the Time Consistent Busy Hour for the Number of Measurements Taken Between 8:00 a.m. and 11:00 p.m. Per Trunk Group			
	15-20 Measurements	11-14 Measurements	7-10 Measurements	3-6 Measurements
2	.045	.055	.060	.095
3	.035	.040	.045	.060
4	.035	.040	.045	.055
5-6	.025	.035	.040	.045
7 or more	.020	.035	.030	.040

(This page filed under Transmittal No. 1)

6. Switched Access Service (Cont'd)

6.6 Obligations of the Customer

In addition to the obligations of the customer set forth in 2. preceding, the customer has certain specific obligations pertaining to the use of Switched Access Service. These obligations are as follows:

6.6.1 Report Requirements

Customers are responsible for providing the following reports to the Telephone Company, when applicable.

(A) Jurisdictional Reports

When a customer orders Switched Access Service for both interstate and intrastate use, the customer is responsible for providing reports as set forth in 2.3.14 preceding. Charges will be apportioned in accordance with those reports. The method to be used for determining the interstate charges is set forth in 2.3.15 preceding.

(B) Code Screening Reports

When a customer orders service class routing, trunk access limitation or call gapping arrangements, it must report the number of trunks and/or the appropriate codes to be instituted in each end office or access tandem switch, for each of the arrangements ordered.

(C) 900 Access Service Code Reports

When ordering 900 Access Service, the customer must report the appropriate NXX Codes to be instituted. The Telephone Company will activate code identification at all offices where capability is available. The report must be updated by the customer

6. Switched Access Service (Cont'd)

6.6.1 Report Requirements (Cont'd)

(C) 900 Access Service Code Reports (Cont'd)

each time a change is scheduled to occur, i.e., when a new code is to be added or an existing code is to be deleted. Such reports shall be provided according to negotiated service intervals in order to allow the Telephone Company sufficient time to implement the change.

(D) Substantial Call Volume 900 Services

When a customer offers services for which a substantial call volume is expected during a short period of time (e.g., media stimulated events) the customer must notify the Telephone Company at least 24 hours in advance of each peak period. For events scheduled during weekends or holidays, the Telephone Company must be notified no later than 5:00 p.m. local time the prior business day. Notification should include the nature, time, duration and frequency of the event, an estimated call volume, and the 900 NXX line number(s) to be used.

On the basis of the information provided, the Telephone Company will work cooperatively with the customer to implement network management controls if required to reduce the probability of excessive network congestion. The Telephone Company will also work cooperatively with the customer to determine the appropriate level of such control.

Failure to provide prescribed notification may result in customer caused network congestion, which could result in discontinuation of service under section 2.1.8 and/or damages under paragraph 2.1.3.

6. Switched Access Service (Cont'd)

6.6 Obligations of the Customer (Cont'd)

6.6.2 Supervisory Signaling

The customer's facilities shall provide the necessary on-hook, off-hook, answer and disconnect supervision.

6.6.3 CCSAC Measurement Data

The customer must provide the Telephone Company with the types of utilization, screening results and maintenance that are being made on SS7 Signaling Connections. The above information must be shared with the Telephone Company on an ongoing basis in order to provide capacity to transport and process interconnection traffic.

6.6.4 Trunk Group Measurement Reports

With the agreement of the customer, trunk group data in the form of usage in CCS, peg count and overflow for its end of all access trunk groups, were technologically feasible, will be made available to the Telephone Company. These data will be used to monitor trunk group utilization and service performance and will be based on previously arranged intervals and format.

6.6.5 Design of Switched Access Services

When a customer orders Switched Access Service, it is the customer's responsibility to assure that sufficient access services have been ordered to handle its traffic.

6. Switched Access Service (Cont'd)

6.7 Rate Regulations

This section contains the specific regulations governing the rates and charges that apply for Switched Access Service.

6.7.1 Description and Application of Rates and Charges

There are three types of rates and charges that apply to Switched Access Service. These are monthly recurring rates (including fixed and per mile rates), usage rates and nonrecurring charges. These rates and charges are applied differently to the various rate elements as set forth in (C), (D) and (E) following. (C

(A) Monthly Rates

Monthly rates (including fixed and per mile rates), are flat recurring rates that apply each month or fraction thereof that a specific rate element is provided. For billing purposes, each month is considered to have 30 days.

(B) Usage Rates

Usage rates (including fixed and per mile rates), are rates that apply only when a specific rate element is used. These are applied on a per call or per access minute basis. Calls or access minute charges are accumulated over a monthly period.

(C) Nonrecurring Charges

Nonrecurring charges are one-time charges that apply for a specific work activity (i.e., installation or change to an existing service). The types of nonrecurring charges that apply for Switched Access Service are: installation of service and service rearrangements.

6. Switched Access Service (Cont'd)

6.7 Rate Regulations (Cont'd)

6.7.1 Description and Application of Rates and Charges (Cont'd)

(C) Nonrecurring Charges (Cont'd)

(1) Installation of Service

Nonrecurring charges apply to each Switched Access Service installed. For Switched Access Service which is ordered on a per line or trunk basis, the charge is applied per line or trunk.

A DNAL channel termination charge, per point of termination, will apply to each DNAL ordered. In addition, nonrecurring charges apply per link when an SS7 Signaling Connection is installed for use with FGD or ATAXXX with the CCSAC optional feature.

(a) For an Entrance Facility which is ordered on a per transport channel basis, the charge is applied per transport channel.

(b) For Switched Access lines or trunks which traverse Direct Trunked Transport or Tandem Switched Transport, the nonrecurring charge is applied per transport channel transmission path.

For other optional features or Basic Service Elements, a nonrecurring charge applies per arrangement as shown in 6.8 following.

6. Switched Access Service (Cont'd)

6.7 Rate Regulations (Cont'd)

6.7.1 Description and Application of Rates and Charges (Cont'd)

(C) Nonrecurring Charges (Cont'd)

(2)

(3) Service Rearrangements

All changes to existing services other than changes involving administrative activities and the off-hook supervisory signaling of ALA or FGA Access Services, will be treated as a discontinuance of the existing service and an installation of a new service. The nonrecurring charge described in (1) preceding will apply for this work activity. Moves that change the physical location of the point of termination are described and charged for as set forth in 6.7.5 following.

- If, due to technical limitations of the Telephone Company, a customer could not combine its Interim 800 traffic with its other trunk Switched Access Services, no charge shall apply to combine these trunk groups when it becomes technically possible.

(This page filed under Transmittal No. 1)

6. Switched Access Service (Cont'd)

6.7 Rate Regulations (Cont'd)

6.7.1 Description and Application of Rates and Charges (Cont'd)

(C) Nonrecurring Charges (Cont'd)

(3) Service Rearrangements (Cont'd)

Administrative changes will be made without charge(s) to the customer. Administrative changes are as follows:

- Change of customer name,
- Change of customer or customer's end user premises address when the change of address is not a result of a physical relocation of equipment,
- Change in billing date (name, address, or contact name or telephone number),
- Change of agency authorization,
- Change of customer circuit identification,
- Change of billing account number,
- Change of customer test line number,
- Change of customer or customer's end user contact name or telephone number, and
- Change of jurisdiction.

Changes to the point in time when the off-hook supervisory signal is provided in the originating call sequence, i.e., when the off-hook supervisory signal is changed from being provided by the customer’s equipment before the called party answers to being forwarded by the customer’s equipment when the called party answers or vice versa, are subject to the nonrecurring charge as set forth in 5.2.2(A) preceding.

6. Switched Access Service (Cont'd)

6.7 Rate Regulations (Cont'd)

6.7.1 Description and Application of Rates and Charges (Cont'd)

(C) Nonrecurring Charges (Cont'd)

(3) Service Rearrangements (Cont'd)

For additions, changes or modifications to an optional feature which has a separate nonrecurring charge, that nonrecurring charge will apply.

For additions, changes, or modifications to optional features that do not have their own separate nonrecurring charges, a charge equal to one half the Switched Transport nonrecurring (i.e., installation) charge will apply. When an optional feature is not required on each transport channel, but rather for an entire transport channel group, an end office or an access tandem switch, only one such charge will apply (i.e., it will not apply per transmission path).

On existing Switched Access trunks, for a change of Switched Access signaling type from multifrequency address signaling to SS7 out of band signaling, i.e., the CCSAC optional feature, no charge will apply, provided there is no change in the physical serving arrangement. When the CCSAC optional feature is specified, the customer may add Calling Party Number (CPN), Charge Number (CN), and Carrier Selection Parameter (CSP) at no charge if these optional features are specified at the same time the CCSAC optional feature is ordered.

6. Switched Access Service (Cont'd)

6.7 Rate Regulations (Cont'd)

6.7.1 Description and Application of Rates and Charges (Cont'd)

(C) Nonrecurring Charges (Cont'd)

(3) Service Rearrangements (Cont'd)

When 64CCC is ordered on an existing FGD or ATAXXX trunk with CCSAC, the full nonrecurring charge described in (1) preceding will apply. The change will be treated as a discontinuance of the existing service and an installation of a new service and a new minimum period charge will apply as set forth in 6.7.3. The customer may order Access Transport Parameter (ATP) for no additional charge if ordered in conjunction with 64CCC.

Pursuant to the FCC Docket "In the Matter of Transport Rate Structure and Pricing (CC Docket No. 91-213)", Report and Order and Further Notice of Proposed Rulemaking, released October 16, 1992, Nevada Bell will waive certain nonrecurring charges for a period ending May 1, 1994, (or until a six month period following the implementation of the interim rate structure).

(This page filed under Transmittal No. 1)

6. Switched Access Service (Cont'd)

6.7 Rate Regulations (Cont'd)

6.7.1 Description and Application of Rates and Charges (Cont'd)

(C) Nonrecurring Charges (Cont'd)

(3) Service Rearrangements (Cont'd)

Additional trunks installed at the end office or tandem beyond those existing when the reconfiguration is ordered will be subject to full installation charges. The reconfiguration will be a Feature Group (FG) or Basic Service Arrangement Equivalency unless, due to Telephone Company facility limitation, equivalent FG or BSA cannot be provisioned.

6. Switched Access Service (Cont'd)

6.7 Rate Regulations (Cont'd)

6.7.1 Description and Application of Rates and Charges (Cont'd)

(D) Application of Rates

The following paragraphs set forth the Switched Access Service rate elements and how the rates are applied for the elements.

(1) Entrance Facilities

The Entrance Facility includes the charge for transport from a customer's serving wire center to the customer's premises. The rate is applied for a Voice Grade, DS1 and DS3 Transport Channel on a point of termination per month basis. The rate as set forth in 6.8.1(A) following applies for the selected Transport Channel per point of termination even if all the transmission paths on the selected Transport Channel are not activated. The DS3 Entrance Facility requires DS3 to DS1 multiplexing as set forth in 6.7.1(D)(5) following. Additionally, DS1 to DS0 multiplexing chargeable optional feature is available as set forth in 6.7.1(D)(5) following.

6. Switched Access Service (Cont'd)

6.7 Rate Regulations (Cont'd)

6.7.1 Description and Application of Rates and Charges (Cont'd)

(D) Application of Rates (Cont'd)

(2) Direct Trunked Transport

Direct Trunked Transport includes the charge for transport from a customer's serving wire center to an end office for switching of a customer's originating and terminating traffic, a hub location for multiplexing or an Access Tandem for interconnection to Tandem Switched Transport to an end office(s). The rates are applied for a Voice Grade, DS1 and DS3 Transport Channel on a per month fixed and per month per mile basis. The mileage between the end office, hub or access tandem involved and the customer's serving wire center is determined as set forth in 6.7.11 following. The rates as set forth in 6.8.2(B) following apply for the selected Transport Channel even if all the transmission paths on the selected Transport Channel are not activated. DS3 Direct Trunked Transport requires DS3 to DS1 multiplexing as set forth in 6.7.1(D)(5) following. Additionally, a DS1 to DS0 multiplexing chargeable optional feature is available as set forth in 6.7.1(D)(5) following.

(3) Tandem Switched Transport

Tandem Switched Transport includes charges for transport from end offices to the access tandem and for Tandem Switching at the access tandem.

(a) Tandem Switched Transport rates are applied on a per minute of use fixed and per minute of use per mile basis. The chargeable minutes of use for determining the charges are the minutes that are carried over the involved Tandem Switched Transport facilities. The mileage between the end office involved and the access tandem is determined as set forth in 6.7.11 following. The rates are as set forth in 6.8.1(C) following.

6. Switched Access Service (Cont'd)

6.7 Rate Regulations (Cont'd)

6.7.1 Description and Application of Rates and Charges (Cont'd)

(D) Application of Rates (Cont'd)

(3) Tandem Switched Transport (Cont'd)

(b) Tandem Switching rates are applied on a per minute of use basis. The chargeable minutes of use for determining the charges are the minutes that are carried over the involved Tandem Switched Transport facilities. The chargeable minutes are determined as set forth 6.7.6 following. The rates are as set forth in 6.8.1(C) following.

(c) Host Remote Transmission rates are applied on a per access minutes of use and a per access minutes of use per mile basis. These rates also apply to Common Transport facilities that are provided for the common use of all customers but which are not switched through an access tandem.

Host Remote Transmission may be associated with both tandem routed services and direct routed services such as when Tandem-Switched Transport is ordered to a host office to access remotes. Mileage is always measured separately from Tandem-Switched Transmission and Direct-Trunked Transport.

Mileage measure is described in 6.7.11.

(d) Tandem End Office Multiplexing

Rates are applied on a per minute of use basis for the use of the multiplexing equipment on the end office side of the access tandem.

(e) Dedicated Tandem Trunk Port

Rates are applied on a monthly per port basis, for each dedicated trunk on the serving wire center side of the access tandem.

(This page filed under Transmittal No. 1)

6. Switched Access Service (Cont'd)

6.7 Rate Regulations (Cont'd)

6.7.1 Description and Application of Rates and Charges (Cont'd)

(D) Application of Rates (Cont'd)

(4) Transport Interconnection Charge

The Transport Interconnection charge is divided into two subelements. The Transport Interconnection Charge per minute-of-use rates apply to all originating and terminating Switched Access minutes of use that utilize the Company's transport services. The Non-Facilities-Based Interconnection Charge will be assessed in lieu of the Interconnection Charge for all traffic which uses the Telephone Company's local switching services but does not use the Telephone Company's transport services. The Transport Interconnection Charge and Non-Facilities-Based Interconnection Charge premium and non-premium rates are assessed consistent with the application of premium and non-premium Local Switching rates.

Transport Interconnection Charge rates are applied to premium and non-premium rates minutes based upon whether the minutes are classified as originating or terminating. Originating calling permits the delivery of calls from Telephone Exchange service locations to the customer's premises. Terminating calling permits the delivery of calls from the customer's premises to Telephone Exchange service locations.

(1) Originating rates apply to:

- originating access minutes of use (excluding those to which terminating rates apply, as specified in (2) following;

- originating 500, 700, 800, 900 and access minutes of use which are reported as minutes that terminate over a Switched Access Service that is assessed terminating Carrier Common Line Access Charges. Such originating minutes must be reported as specified in 2.3.14(Jurisdictional Report).

(2) Terminating rates apply to:

- terminating access minutes of use;

- FGA and ATA originating access minutes of use;

- originating 500, 700, 800, 900 access minutes of use for calls on which Carrier Common line charges

(This page filed under Transmittal No. 1)

6. Switched Access Service (Cont'd)

6.7 Rate Regulations (Cont'd)

6.7.1 Description and Application of Rates and Charges (Cont'd)

(D) Application of Rates (Cont'd)

(4) Transport Interconnection Charge (Cont'd)

(2) (Cont'd)
are not billed on the terminating end. When an Expanded Interconnection arrangement, as set forth in Section 18, following, is provided and the customer requires DTT to an end office within the same wire center building, the IC rates are not assessed.

(5) Multiplexing
The Multiplexing rate applies when an Entrance Facility or Direct Trunked transport is multiplexed at a Telephone Company hub to a lower capacity (i.e., DS3 to DS1 or DS1 to DS0). DS3 to DS1 multiplexing is required on a DS1 Entrance Facility or Direct Trunked transport. The Multiplexing rate is applied on a per Multiplexing arrangement basis. The rate as set forth in 6.8.1(I) following applies for the selected Multiplexing arrangement even if all the Multiplexing ports for the selected Multiplexing arrangement are not activated.

(6) Local Switching

Local Switching includes usage charges and optional features charges. Local Switching usages rates are applied on a per minute of use basis. Local Switching minutes are as set forth in (E) following. The chargeable minutes are determined as set forth in 6.7.6 following. The rates are as set forth in 6.8.2 following.

The Dedicated End Office Port provides for each in service dedicated line or trunk terminating in the end office port. A monthly rate applies, per line or per trunk, for each dedicated line or trunk terminating in the end office port.

The Shared End Office Trunk Port rate element provides for the use of the shared end office trunk ports for termination of Tandem Switched Transport trunks for tandem routed traffic. A per minute of use charge applies to the Shared End Office Trunk Ports for termination of Tandem Switched transport trunks for tandem routed traffic.

Local Switching optional feature rates are applied on a per month and a per minute of use basis as set forth in 6.8.2 following.

6. Switched Access Service (Cont'd)

6.7 Rate Regulations (Cont'd)

6.7.1 Description and Applications of Rates and Charges (Cont'd)

(D) Application of Rates (Cont'd)

(7) Information Surcharge

Information Surcharge rates are applied on a per minutes of use basis. The Information Surcharge minutes are as set forth in (E) following. The chargeable minutes are determined as set forth in 6.7.6 following. The rates are as set forth in 6.8.3 following.

(8) Tandem Switched Transport with Direct Trunked Transport DS1 and DS3 Transport Channels

When Tandem Switched Transport is provided with Direct Trunked Transport DS1 and/or DS3 Transport Channels, the Direct Trunked Transport rates will be adjusted and the Tandem Switched Transport will be billed the per minutes of use fixed and per minutes of use per mile rates for all chargeable minutes as set forth in (3) preceding.

6. Switched Access Service (Cont'd)

6.7 Rate Regulations (Cont'd)

6.7.1 Description and Application of Rates and Charges (Cont'd)

(D) Application of Rates (Cont'd)

(9) Transport Application

An Entrance Facility or EISCT and Direct Trunked transport and Tandem Switched transport is required for all Switched Access Service except when the customer directs its Switched Access Service over another customer's facility as set forth in 6.1.2(A) preceding.

The customer must order Direct Trunked transport from the customer's serving wire center to an access tandem with Tandem Switched transport from the access tandem to the end office(s). The customer may order multiplexing associated with a DS3 or DS1 Entrance Facility or Direct Trunked transport in conjunction with the above.

6. Switched Access Service (Cont'd)

6.7 Rate Regulations (Cont'd)

6.7.1 Description and Application of Rates and Charges (Cont'd)

(D) Application of Rates (Cont'd)

(9) Transport Application (Cont'd)

For ALA and FGA Switched Access Service, the customer shall select the first point of switching and Direct Trunked Transport will be provided to the selected first point of switching. In the terminating direction of ALA and FGA, calls which terminate to end offices other than the first point of switching will be provided over Tandem Switched Transport from the first point of switching to the terminating end office. Tandem Switched Transport rates per minute of use fixed and per minute of use per mile will apply. Tandem Switched Transport minutes are as set forth in (E) following. The chargeable minutes of use for determining the charges are the minutes that are carried over the involved Tandem Switched transport facilities. The chargeable minutes are determined as set forth in 6.7.6 following. The mileage between the end office involved and the FGA first point of switching is determined as set forth in 6.7.11 following. Tandem Switching charges as set forth in 6.8.1(C)(2) following do not apply.

6. Switched Access Service (Cont'd)

6.7 Rate Regulations (Cont'd)

6.7.1 Description and Application of Rates and Charges (Cont'd)

(D) Application of Rates (Cont'd)

(10) DNAL Recurring Rates

(a) DNAL Termination

A monthly rate applies for each DNAL point of Termination requested by the customer.

(b) DNAL Mileage

A fixed monthly rate applies for each DNAL channel between the customer designated premises and the Telephone Company end office switch where the DNAL is terminated.

A monthly rate per mile applies to each airline mile between the serving wire center of the customer's designated premises and the Telephone Company end office switch where the BSE requiring the DNAL is provided. Airline mileage is calculated as set forth in 6.7.11.

(11) Direct Inward Dial (DID)

(a) DID Termination

A fixed monthly rate and a nonrecurring charge applies to each trunk terminating in the central office. Usage will be billed on assumed minutes of use per month.

6. Switched Access Service (Cont'd)

6.7 Rate Regulations (Cont'd)

6.7.1 Description and Application of Rates and Charges (Cont'd)

(D) Application of Rates (Cont'd)

(12) SS7 Interconnection

(a) SS7 Link

A fixed monthly rate applies for each STP Access connection between the Telephone Company STP Wire Center and the customer designated premises.

A monthly rate per mile applies to each airline mile between the Telephone Company STP Wire Center and the serving Wire Center of the customer designated premises.

A nonrecurring charge applies for each SS7 Link.

(b) STP Port

A fixed monthly charge applies per STP Port Termination installed at the Telephone Company STP Wire Center.

SS7 Interconnection rate elements are Local Transport monthly rated Switched Access Service rate elements and are not subject to the usage (i.e., Local Transport, Local Switching and Carrier Common Line) rate categories.

6. Switched Access Service (Cont'd)

6.7 Rate Regulations (Cont'd)

6.7.1 Description and Application of Rates and Charges (Cont'd)

(D) Application of Rates (Cont'd)

(13) Toll Free Access Service

The Basic Toll Free Access Query charge is assessed to the customer on a per query basis. Additional charges may apply to Toll Free Access Service Vertical Features. These charges are billed in addition to the basic query charge. The Six Digit Master Number List Turnaround charge is billed in lieu of the Basic Toll Free Access Query charge when customer identification is performed for Canadian and Caribbean Toll Free numbers. There are no vertical features associated with this function. These charges are described in 6.8.8 following.

(14) Bill Name and Address Service (BNA)

(a) The Telephone Company will, upon request, provide Billing Name and Address Service (BNA), associated with customers who have listed telephone numbers. The Billing Name and Address Service will be provided only when the customer, or the customer's billing agent needs the information to bill a call and the originating telephone number is provided. The customer or the customer's billing agent must subscribe to Automatic Number Identification (ANI) provided by the Telephone Company.

6. Switched Access Service (Cont'd)

6.7 Rate Regulations (Cont'd)

6.7.1 Description and Application of Rates and Charges (Cont'd)

(D) Application of Rates (Cont'd)

(14) Bill Name and Address Service (BNA) (Cont'd)

(b) A standard format for the receipt and provision of the listed, nonpublished and unlisted telephone number and billing name and address information will be established by the Telephone Company and provided to the customer. If in the course of Telephone Company business it is necessary to change the format, the Telephone Company will provide notification to the involved customers one month prior to the change. The Telephone Company will specify the location(s) where requests are to be received.

(c) The Telephone Company will receive from the customer/billing agent a magnetic tape which contains the originating telephone numbers obtained through Automatic Number Identification (ANI). The frequency for receipt of the customer/billing agent provided magnetic tapes will be at intervals mutually agreed upon between the Telephone Company and the customer. The customer/billing agent provided End User telephone numbers will programmatically be associated with the proper listed, nonpublished, or unlisted End User billing name and address contained in the CRIS file at that time. The information will then be provided back to the customer/billing agent as set forth in (d) following. The Telephone Company will determine the number of magnetic tapes required to provide the Billing Name and Address Service detail.

6. Switched Access Service (Cont'd)

6.7 Rate Regulations (Cont'd)

6.7.1 Description and Application of Rates and Charges (Cont'd)

(D) Application of Rates (Cont'd)

(14) Bill Name and Address Service (BNA) (Cont'd)

(d) Output magnetic tape(s) containing Billing Name and Address details will be provided to the customer/billing agent as part of Billing Name and Address Service. The magnetic tapes will be provided without the return of previously supplied customer provided tapes. The Telephone Company will supply the output magnetic tapes. Unless otherwise mutually agreed to by the Telephone Company and the customer/billing agent, the output magnetic tapes will be sent to the customer via U.S. Mail. However, the customer/billing agent may pick up the output magnetic tapes at a location designated by the Telephone Company or request that the detail on the magnetic tapes be data transmitted to the customer/billing agent. When the billing name and address details are data transmitted to a customer/billing agent location, program development charges to design, develop, test and maintain the necessary programs will apply as set forth in 6.8.9 and data transmission charges will be determined on an individual case basis. The time to implement programs for data transmission will be determined on an individual case basis. The data transmission hardware and software specifications will be mutually agreed upon by the Telephone Company and customer/billing agent.

6. Switched Access Service (Cont'd)

6.7 Rate Regulations (Cont'd)

6.7.1 Description and Application of Rates and Charges (Cont'd)

(D) Application of Rates (Cont'd)

(14) Bill Name and Address Service (BNA) (Cont'd)

(e) The Telephone Company will normally make available for mailing or pick-up the output magnetic tape six workdays after receipt of the customer/billing agent provided magnetic tape, or at an interval that is mutually agreed upon by the Telephone Company and the customer/billing agent. Availability may be delayed in the case of input data errors in the customer/billing agent provided magnetic tape.

(f) Billing Name and Address Service detail will not be retained by the Telephone Company for longer than 45 days. If the customer/billing agent requests that the initially provided output magnetic tape be made available again, such requests must be within 30 days from the date the first output magnetic tape was made available. Charges as set forth in 6.8.9 will apply.

(g) Any customer/billing agent purchasing output magnetic tapes pursuant to this tariff agrees to abide by all applicable Commission rules, decisions, orders, statutes and laws concerning the disclosure of published and nonpublished telephone numbers, and further agrees to use the information contained therein only for the purpose of billing by the end user for services provided to their end users.

(h) At the customer's/billing agent's request the Telephone Company may undertake the development of a program to satisfy a particular customer need. Program development charges would apply for such an undertaking.

6. Switched Access Service (Cont'd)

6.7 Rate Regulations (Cont'd)

6.7.1 Description and Application of Rates and Charges (Cont'd)

(D) Application of Rates (Cont'd)

(14) Bill Name and Address Service (BNA) Cont'd)

(i) In the event an End User Customer notifies the Telephone Company that their BNA is not to be released, that End User's LEC Card Calling Card will be cancelled and the user will be blocked from receiving 3rd number and collect calls.

6.7.2 Minimum Periods

Switched Access Service is provided for a minimum period of one month

6. Switched Access Service (Cont'd)

6.7 Rate Regulations (Cont'd)

6.7.3 Minimum Period Charge

The Minimum Period Charge applies when the customer requests disconnect of Switched Access Service prior to the expiration of the thirty day minimum period.

The Minimum Period Charge consists of the following:

(A) The Switched Transport Entrance Facility charges, Direct Trunked Transport charges, Switched Transport Multiplexor charges associated with Entrance Facility and Direct Trunked Transport, Optional Features per month charges.

(B) All usage sensitive rate elements, following, based on actual usage: Transport Interconnection Charge, Switched Transport Tandem Switched transport, Tandem Switching Information Surcharge, Local Switching, Toll Free Access Service, as set forth in 6.8 following.

(C) Nonrecurring charges associate with the establishment of service, as set forth 6.8 following.

6.7.4 Change of Basic Service Arrangement or Feature Group Type

Changes from one type of Basic Service Arrangement or feature group to another will be treated as discontinuance of one type of service and a start of another. Nonrecurring charges will apply, with three exceptions.

(1) When a customer upgrades an ALA, ATA950, Feature Group A or B service to an ATAXXX or Feature Group D service, or an ALA or Feature Group A service to an ATA950 or Feature Group B service, the nonrecurring charges will not apply if the following conditions are met:

(a) The same customer premises is maintained, and

(b) The disconnections of ALA or FGA service and the start of ATA950, ATAXXX, FGB or FGD service are within the same LATA; or the disconnections of ATA950 or FGB service and the start of ATAXXX or FGD service are within the same tandem subtending area.

(This page filed under Transmittal No. 1)

6. Switched Access Service (Cont'd)

6.7 Rate Regulations (Cont'd)

6.7.4 Change of Basic Service Arrangement or Feature Group Type (Cont'd)

(1) (Cont'd)

(c) The orders for the disconnect of the ALA or FGA service for the start of ATAXXX or FGD service are placed with the Telephone Company within 30 days of allocation of the most recent end office conversion to equal access in the LATA or the orders for the disconnect of the ATA950 or FGB service for the start of ATAXXX or FGD service are placed with the Telephone Company within 30 days of the allocation of the most recent end office conversion to equal access in the tandem subtending area or the orders for the disconnect of ALA or FGA service for the start of ATA950 or FGB service are placed with the Telephone Company within 30 days of the start of ATA950 or FGB service and

(d) The customer requests the same effective date for both the disconnect of service and start of service or

(e) The customer requests that the disconnect date on the ALA, ATA950, FGA or FGB service, for the start of ATAXXX or FGD service, be no more than 60 days after allocation. The customer requests the disconnect date of the ALA or FGA service for the start of ATA950 or FGB service be no more than 90 days after the start of the new ATA950 or FGB service.

(f) In the case of an ALA to ATA950; or FGA to FGB change; the ATA950 or FGB trunks that are requested are served from an access tandem.

(2) When an ATANEA or FGC service is upgraded to an ATAXXX or FGD service, the nonrecurring charge will not apply. Because ATANEA or FGC is no longer available in an end office once the end office is

(This page filed under Transmittal No. 1)

6. Switched Access Service (Cont'd)

6.7 Rate Regulations (Cont'd)

6.7.4 Change of Basic Service Arrangements or Feature Group Type (Cont'd)

(2) (Cont'd)

equipped with equal access capabilities, (i.e., ATAXXX or FGD), such upgrades will be performed by the Telephone Company without the customer being required to place an order for the change. When the effective dates for the

disconnect and start of ATAXXX or FGD service are the same, minimum period obligations will not change, (i.e., the time elapsed in the existing minimum period obligations will be credited to the minimum period obligations for ATAXXX or FGD or the new ATA950 or FGB). When the effective dates for the disconnect and start of service are different, new minimum period obligations will be established for the ATAXXX or FGD or the new ATA950 or FGB service. For all other changes from one type of Basic

Service Arrangement or Feature Group to another, new minimum period obligations will also be established.

(3) Nonrecurring charges will not apply to the conversion of existing Feature Groups to their unbundled BSA equivalents. However, during the transition period as set forth in Section 6.1 preceding, conversion from a BSA to its equivalent Feature Group will be treated as a discontinuance of the existing service and an installation of new service (nonrecurring charge will apply.) When a customer converts an existing Feature Group to its unbundled BSA equivalent, minimum period obligations will not change, i.e., the time elapsed in the existing minimum period obligations will be credited to the minimum period obligations for the BSA. For changes from a BSA to a Feature Group during the transition period as noted above, new minimum period obligations will be established.

(This page filed under Transmittal No. 1)

6. Switched Access Service (Cont'd)

6.7 Rate Regulations (Cont'd)

6.7.5 Moves

A move involves a change in the physical location of one of the following:

- The point of termination at the customer's premises
- The customer's premises

The charges for the move are dependent on whether the move is to a new location within the same building or to a different building.

(A) Moves Within the Same Building

When the move is to a new location within the same building, the charge for the move will be an amount equal to one half of the nonrecurring charge for the capacity affected. There will be no change in the minimum period requirements.

(B) Moves to a Different Building

Moves to a different building will be treated as a discontinuance and start of service and all associated nonrecurring charges will apply. New minimum period requirements will be established for the new service. The customer will also remain responsible for satisfying all outstanding minimum period charges for the discontinued service.

6.7.6 Measuring Access Minutes

Customer traffic to end offices will be measured (i.e., recorded or assumed) by the Telephone Company at end office switches or access tandem switches. Originating and terminating calls will be measured (i.e., recorded or assumed) by the Telephone Company to determine the basis for computing chargeable access minutes.

For Local Switching, Information Surcharge and Local Switching optional Features usage based charges for terminating calls over ALA, FGA, ATA950, FGB, FGC, 800, ATAXXX and FGD, and for originating calls over ALA or FGA where the off-hook supervisory signal is provided by the customer's equipment, FGB, ATA950, ATAXXX and FGD, the measured minutes are the chargeable access minutes. For Switched Transport Tandem Switched Transport and Tandem Switching usage based charge for terminating calls over ATA950, FGB, FGC, 800, ATAXXX and FGD, and for originating calls over FGB, ATA950, ATAXXX and FGD, the measured minutes carried over the involved Switched Transport Tandem Switched Transport are the chargeable access minutes.

(This page filed under Transmittal No. 1)

6. Switched Access Service (Cont'd)

6.7 Rate Regulations (Cont'd)

6.7.6 Measuring Access Minutes (Cont'd

For Local Switching, Information Surcharge and Local Switching Optional Features usage based charges for originating calls over ALA or FGA, FGC, ATAXXX and FGD with conventional signaling where the off-hook supervisory signal is forwarded by the customer's equipment when the called party answers, the chargeable access minutes are derived from recorded minutes in the following manner. Also when determining Switched Transport Tandem Switched Transport and Tandem Switching usage based charges for originating calls over FGD, ATAXXX and FGD with conventional signaling where the off-hook supervisory signal is forwarded by the customer's equipment when the called party answers, the chargeable access minutes are derived in the following manner from recorded minutes carried over the involved Switched Transport Tandem Switched Transport.

Step 1: Obtain recorded originating minutes and messages, measured as set forth in (C), (E) and (F) following for ALA or FGA, ATANEA or FGC and ATAXXX or FGD respectively, from the appropriate recording data.

Step 2: Obtain the total attempts by dividing the originating measured messages by the completion ratio. Completion ratios (CR) are obtained separately for the major call categories such as DDD, operator, 800, 900, directory assistance and international from a sample study which analyzes the ultimate completion status of the total attempts which receive acknowledgement from the customer. That is, Measured Messages divided by Completion Ratio equals Total Attempts.

Step 3: Obtain the total non-conversation time additive (NCTA) by multiplying the total attempts (obtained in Step 2) by the NCTA per attempt ratio. The NCTA per attempt ratio is obtained from the sample study identified in Step 2 by measuring the non-conversation time associated with both completed and incompletedy attempts. The total NCTA is the time on a completed attempt from customer

6. Switched Access Service (Cont'd)

6.7 Rate Regulations (Cont'd)

6.7.6 Measuring Access Minutes (Cont'd)

Step 3: (Cont'd)

acknowledgement of receipt of call to called party answer (set up and ringing) plus the time on an incompleted attempt from customer acknowledgment of call until the access tandem or end office receives a disconnect signal (ring - no answer, busy or network blockage). That is, Total Attempts times Non-Conversation Time per Attempt Ratio equals Total NCTA.

Step 4: Obtain total chargeable originating access minutes by adding the total NCTA (obtained in Step 3) to the recorded originating measured minutes (obtained in Step 1). That is, Measured Minutes plus NCTA equals Chargeable Originating Access Minutes.

Following is an example which illustrates how the chargeable originating access minutes are derived from the measured originating minutes using this formula.

Where: Measured Minutes (M. Min.) = 7,000
Measured Messages (M. Mes.) = 1,000
Completion Ratio (CR) = .75
NCTA per Attempt = .4

(1) Total Attempts = $\frac{1,000(\text{M. Mes.})}{.75\ (\text{CR})}$ = 1,333.3

(2) Total NCTA = .4 (NCTA per Attempt) x 1,333.33 = 533.33

(3) Total Chargeable Originating Access Minutes = 7,000(M. Min) + 533.33(NCTA) = 7,533.33

(This page filed under Transmittal No. 1)

6. Switched Access Service (Cont'd)

6.7 Rate Regulations (Cont'd)

6.7.6 Measuring Access Minutes (Cont'd)

When assumed minutes are used, the assumed minutes are the chargeable access minutes.

ALA or FGA access minutes or fractions thereof, the exact value of the fraction being a function of the switch technology where the measurement is made, are accumulated over the billing period for each line or hunt group, and are then rounded up to the nearest access minute for each line or hunt group. ATA950, ATANEA, ATAXXX, FGB, FGC and FGD access minutes or fractions thereof, the exact value of the fraction being a function of the switch technology where the measurement is made, are accumulated over the billing period for each end office, and are then rounded up to the nearest access minute for each end office.

Assumed minutes are used for ALA or FGA services which originate or terminate in end offices not equipped with measurement capabilities.

The assumed average access minutes used for services originating or terminating in offices where measurement capability does not exist are set forth in (A) following for ALA or Feature Group A Services, and in (B) following for ATA950 or Feature Group B Services.

(A) Where originating and terminating measurement capability does not exist for ALA or Feature Group A provided to an entry switch, the number of access minutes will be assumed to be 4195 access minutes per line per month when the line is arranged for two way calling (1510 originating and 2685 terminating).

(This page filed under Transmittal No. 1)

6. Switched Access Service (Cont'd)

6.7 Rate Regulations (Cont'd)

6.7.6 Measuring Access Minutes (Cont'd)

(A) (Cont'd)

Where measurement capability exists for either originating or terminating usage, but not both, on a line arranged for two way calling, the number of access minutes per line per month will be an assumed 4195 or the measured usage, whichever is greater. If the usage in the measured direction exceeds 4195 access minutes per line per month, it will be assumed that there is zero usage in the unmeasured direction. If the measured usage is less than 4195 access minutes per line per month, the usage in the unmeasured direction will be the assumed usage for that unmeasured direction; except that the total of measured and assumed minutes will not exceed the total assumed usage of 4195 access minutes designated for two way calling. If the total exceeds 4195 access minutes the assumed minutes shall be reduced so that the total of measured and unmeasured minutes equals 4195 access minutes.

Additionally, when the line is arranged for one way calling and there is no measurement capability for that direction, 1510 access minutes per month will be assumed for originating calling only lines and 2685 access minutes per month will be assumed for terminating calling only lines.

Notwithstanding the preceding, when an ALA or Feature Group A is used for the provision of WATS-type service where measurement capability exists at the WATS Serving Office but not at the ALA or Feature Group A entry switch, the measured WATS-type originating and or terminating minutes of use shall be separately summed and compared to their respective total assumed originating and/or terminating minutes of use. The number of access minutes per line per month will be the assumed or the measured usage, whichever is greater.

(This page filed under Transmittal No. 1)

6. Switched Access Service (Cont'd)

6.7 Rate Regulations (Cont'd)

6.7.6 Measuring Access Minutes (Cont'd)

(B) Where originating and terminating measurement capability does not exist for ATA950 or Feature Group B provided to an entry switch, the number of access minutes will be assumed to be 8700 access minutes per line per month when the trunk is arranged for two way calling (3132 originating and 5568 terminating).

Where measurement capability exists for either originating or terminating usage, but not both, on a trunk arranged for two way calling, the number of access minutes per trunk per month will be an assumed 8700 or the measured usage, whichever is greater. If the usage in the measured direction exceeds 8700 access minutes per trunk per month, it will be assumed that there is zero usage in the unmeasured direction. If the measured usage is less than 8700 access minutes per trunk per month, the usage in the unmeasured direction will be the assumed usage for that unmeasured direction except that the total of measured and assumed minutes will not exceed the total assumed usage of 8700 access minutes designated for two way calling. If the total exceeds 8700 access minutes the assumed minutes shall be reduced so that the total of measured and unmeasured minutes equals 8700 access minutes.

Additionally, when the trunk is arranged for one way calling and there is no measurement capability for that direction, 3132 access minutes per month will be assumed for originating calling only lines and 5568 access minutes per month will be assumed for terminating calling only lines.

6. Switched Access Service (Cont'd)

6.7 Rate Regulations (Cont'd)

6.7.6 Measuring Access Minutes (Cont'd)

(B)(Cont'd)

Notwithstanding the preceding, when ATA950 or Feature Group B is used for the provision of WATS or WATS-type service where measurement capability exists at the WATS Serving Office but not at the ATA950 or Feature Group B entry switch, the measured WATS or WATS-type originating and/or terminating minutes of use shall be separately summed and compared to their respective total assumed originating and/or terminating minutes of use. The number of minutes per trunk per month will be the assumed or the measured usage, whichever is greater.

(C) Access Line Arrangement or Feature Group A Usage Measurement

For originating calls over ALA or FGA, usage measurement begins when the originating ALA or FGA entry switch receives an off-hook supervisory signal forwarded from the customer's point of termination. This off-hook signal may be provided by the customer's equipment before the called party answers, or forwarded by the customer's equipment when the called party answers.

The measurement of originating call usage over ALA or FGA ends when the originating ALA or FGA entry switch receives an on-hook supervisory signal from either the originating end user's end office, indicating the originating end user has disconnected, or the customer's point of termination, whichever is recognized first by the entry switch.

(This page filed under Transmittal No. 1)

6. Switched Access Service (Cont'd)

6.7 Rate Regulations (Cont'd)

6.7.6 Measuring Access Minutes (Cont'd)

(C) Access line Arrangement or Feature Group A Usage Measurement (Cont'd)

For terminating calls over ALA or FGA, usage measurement begins when the terminating ALA or FGA entry switch receives an off-hook supervisory signal from the terminating end user's end office, indicating the terminating end user has answered. The measurement of terminating call usage over ALA or FGA ends when the terminating ALA or FGA entry switch receives an on-hook supervisory signal from either the terminating end user's end office, indicating the terminating end user has disconnected, or the customer's point of termination, whichever is recognized first by the entry switch.

(D) Access Trunk Arrangement 950 or Feature Group B Usage Measurement

For originating calls over ATA950 or FGB, usage measurement begins when the originating ATA950 or FGB entry switch receives answer supervision forwarded from the customer's point of termination, indicating the customer's equipment has answered.

The measurement of originating call usage over ATA950 or FGB ends when the originating ATA950 or FGB entry switch receives disconnect supervision from either the originating end user's end office, indicating the originating end user has disconnected, or the customer's point of termination, whichever is recognized first by the entry switch.

6. Switched Access Service (Cont'd)

6.7 Rate Regulations (Cont'd)

6.7.6 Measuring Access Minutes (Cont'd)

(D) Access Trunk Arrangement 950 or Feature Group B Usage Measurement (Cont'd)

For terminating calls over ATA950 or FGB, usage measurement begins when the terminating ATA950 or FGB entry switch receives answer supervision from the terminating end user's end office, indicating the terminating end user has answered.

The measurement of terminating call usage over ATA950 or FGB ends when the terminating ATA950 or FGB entry switch receives disconnect supervision from either the terminating end user's end office, indicating the terminating end user has disconnected, or the customer's point of termination, whichever is recognized first by the entry switch.

(E) Access Trunk Arrangement Non Equal Access or Feature Group C Usage Measurement

For originating calls over ATANEA or FGC, usage measurement begins when the originating ATANEA or FGC entry switch receives answer supervision from the customer's point of termination, indicating the called party has answered.

The measurement of originating call usage over ATANEA or FGC ends when the originating ATANEA or FGC entry switch receives disconnect supervision from either the originating end user's end office, indicating the originating end user has disconnected, or the customer's point of termination, whichever is recognized first by the entry switch.

6. Switched Access Service (Cont'd)

6.7 Rate Regulations (Cont'd)

6.7.6 Measuring Access Minutes (Cont'd)

(E) Access Trunk Arrangements Non Equal Access 950 or Feature Group C Usage Measurement (Cont'd)

For terminating calls over ATANEA or FGC to services other than 800, 900 or Directory Assistance, terminating ATANEA or FGC usage is not directly measured at the terminating entry switch, but is imputed from originating usage, excluding usage from calls to 800, 900 or Directory Assistance Services.

(F) Access Trunk Arrangement 101XXXX or Feature Group D Usage Measurement

For originating calls over ATAXXXX or FGD, usage measurement begins when the originating ATAXXXX or FGD entry switch receives the first wink supervisory signal forwarded from the customer's point of termination. For originating calls over FGD or ATAXXXX with SS7 signaling usage measurement begins when the last point of switching sends the initial address message to the customer.

6. Switched Access Service (Cont'd)

6.7 Rate Regulations (Cont'd)

6.7.6 Measuring Access Minutes (Cont'd)

(F) Access Trunk Arrangement 101XXXX or Feature Group D Usage Measurement (Cont'd)

The measurement of originating call usage over ATAXXXX or FGD ends when the originating ATAXXXX or FGD entry switch receives disconnect supervision from either the originating end user's end office, indicating the originating end user has disconnected, or the customer's point of termination, whichever is recognized first by the entry switch.

For 800 and 900 calls originating from end offices not having equal access capability using ATAXXXX or FGD with conventional signaling, usage measurement begins when the originating ATAXXXX or FGD entry switch receives either, off-hook supervisory signal forwarded from the customer's point of termination or answer supervision from the customer's point of termination indicating the called party has answered.

For terminating calls over ATAXXXX or FGD, the measurement of access minutes begins when the terminating ATAXXXX or FGD entry switch receives answer supervision from the terminating end user's end office, indicating the terminating end user has answered.

The measurement of terminating call usage over ATAXXXX or FGD ends when the terminating ATAXXXX or FGD entry switch receives disconnect supervision from either the terminating end user's end office, indicating the terminating end user has disconnected, or the customer's point of termination, whichever is recognized first by the entry switch.

(This page filed under Transmittal No. 1)

6. Switched Access Service (Cont'd)

6.7 Rate Regulations (Cont'd)

6.7.7 Network Blocking Charge for Access Trunk Arrangement 101XXXX or Feature Group D

The customer will be notified by the Telephone Company to increase its capacity (busy hour minutes of capacity or quantities of trunks) when excessive trunk group blocking occurs on groups carrying ATAXXXX or Feature Group D traffic and the measured access minutes for that hour exceed the capacity purchased. Excessive trunk group blocking occurs when the blocking thresholds stated below are exceeded. They are predicated on time consistent, hourly measurements over a 30 day period excluding Saturdays, Sundays and national holidays. If the order for additional capacity has not been received by the Telephone Company within 15 days of the notification, the Telephone Company will bill the customer, at the rate set forth in 6.8.1(C) following, for each overflow in excess of the blocking threshold when (1) the average "30 day period" overflow exceeds the threshold level for any particular hour and (2) the "30 day period" measured average originating or two-way usage for the same clock hour exceeds the capacity purchased.

Blocking Thresholds

Trunks in Service	1%	1/2%
1-2	.070	.045
3-4	.050	.035
5-6	.040	.025
7 or greater	.030	.020

The 1% blocking threshold is for transmission paths carrying traffic direct (without an alternate route) between an end office and a customer's premises. The 1/2% blocking threshold is for transmission paths carrying first routed traffic between an end office and a customer's premises via an access tandem.

(This page filed under Transmittal No. 1)

6. Switched Access Service (Cont'd)

6.7 Rate Regulations (Cont'd)

6.7.8 Application of Rates for Extension Service

ALA or Feature Group A Switched Access Service is available with extensions, i.e., additional terminations of the service at different building(s) in the same or a different LATA. ALA or Feature Group A extensions within the LATA are provided and charged for under the Telephone Company's local and/or general exchange service tariffs. ALA or Feature Group A extensions in different LATAs are provided and charged for as Special Access Service. The rate elements which apply are: A Voice Grade Channel Termination, Channel Mileage, if applicable, and Signaling Capability (optional features and functions), if applicable. All appropriate monthly rates and nonrecurring charges set forth in 7.7 following will apply.

6.7.9 Message Unit Credit

Calls from end users to the seven digit local telephone numbers associated with ALA or Feature Group A Switched Access Service are subject to Telephone Company local and/or general exchange service tariff charges (including message unit and toll charges as applicable). The monthly bills rendered to customers for their ALA or Feature Group A Switched Access Service will include a credit to reflect any message unit charges collected from their end users under the Telephone Company's local and/or general exchange service tariffs. When the customer is provided ALA or FGA service where measurement capability does not exist, the credit will apply to access minutes not to exceed 1510 per line per month. No credit will apply for any terminating ALA or FGA access minutes. The message unit credit for originating access minutes will be based on the generally applicable message unit charges of the Telephone Company. The message unit credit for originating ALA or FGA access minutes is as set forth in 6.8.6 following.

6. Switched Access Service (Cont'd)

6.7 Rate Regulations (Cont'd)

6.7.10 Local Information Delivery Services

Calls over Switched Access in the terminating direction to certain community information services will be rated under the applicable rates for Switched Access Service as set forth in 6.8 following. In addition, the charges per call as specified under the Telephone Company's local and/or general exchange service tariffs, e.g., 976 (DIAL-IT) Network Services, will also apply.

6.7.11 Mileage Measurement

The mileage to be used to determine the monthly rate for Switched Transport is calculated on the airline distance between the end office switch, which may be a Remote Switching Location, where the call carried by Switched Transport originates or terminates and the customer's serving wire center, except as set forth following. Where applicable, the V&H coordinates method is used to determine mileage. This method is set forth in the NATIONAL EXCHANGE CARRIER ASSOCIATION (NECA) TARIFF F.C.C. NO. 4 for Wire Center Information (V&H coordinates).

When Direct-Trunked Transport is provided to a host-remote arrangement, mileage for Direct-Trunked Transport is calculated using the V&H coordinates of the customer's serving wire center and the host office. Mileage for Host/Remote Transmission is calculated using the V&H coordinates of the host office and the remote switching system or remote switching module where the call originates or terminates.

Mileage for Tandem-Switched Transport is calculated using the V&H coordinates of the tandem and the host office. Mileage for Host/Remote Transmission is calculated using the V&H coordinates of the host office and the remote switching system or remote switching module where the call originates or terminates.

Mileage rates are as set forth in 6.8.1 following. To determine the rate to be billed, first compute the airline mileage using the V&H coordinates method. If the calculation results in a fraction of a mile, always round up to the next whole mile before determining the mileage and applying the rates. Then multiply the mileage by the appropriate rate.

Mileage for the DNAL BSA is calculated on the airline distance between the serving wire center of the customer's designated premises and the telephone company end office switch where the DNAL terminates. The V&H Coordinates method is used to determine mileage. This method is set forth in the NATIONAL EXCHANGE CARRIER ASSOCIATION (NECA) TARIFF F.C.C. No. 4 for Wire Center Information (V&H Coordinates).

6. Switched Access Service (Cont'd)

6.7 Rate Regulations (Cont'd)

6.7.11 Mileage Measurement (Cont'd)

Exceptions to the mileage measurement rules are as follows:

(A) Mileage for Direct Trunked Transport for ALA or Feature Group A Switched Access Service will be calculated on an airline basis, using the V&H coordinates method. The mileage measurement will be between the first point of switching (end office switch where the ALA or Feature Group A switching dial tone is provided) and the customer's serving wire center for the Switched Access Service provided.

In addition, mileage in the terminating direction for ALA or Feature Group A Switched Access Service access minutes which terminate at an end office other than the end office switch where the ALA or Feature Group A switching dial tone is provided, will be calculated on an airline basis, using the V&H coordinates method, between the end office switch where the access minutes terminate and the end office switch where the ALA or Feature Group A switching dial tone is provided. Tandem Switched transport per minute of use fixed and per minute of use per mile charges will be billed for these access minutes.

6. Switched Access Service (Cont'd

6.7 Rate Regulations (Cont'd)

6.7.11 Mileage Measurement (Cont'd)

(B) When the Alternate Traffic Routing optional feature is provided with Access Trunk Arrangements NEA and XXX or Feature Groups C and D, usage rated Tandem Switched Transport access minutes will be apportioned between the two transmission groups used to provide this feature. Such apportionment will be made using: (1) Standard Telephone Company traffic engineering methodology and will be based on the last trunk CCS desired for the high usage group, as described in 6.3.1(L) preceding, and the relative capacity ordered to the end office, when the feature is provided at an end office switch, or to the subtending end offices when the feature is provided at an access tandem switch. For ATAXXX and FGD, the Tandem Switched Transport mileage calculation will be based on the actual measured data which is recorded against the specific trunk group that carried a particular call. The customer will be billed accordingly.

(C) When terminating ATANEA or Feature Group C Switched Access Service is provided from multiple customer designated premises to an end office not equipped with measurement capabilities, the total Switched Transport access minutes for that end office will be apportioned among the trunk groups accessing the end office on the basis of the relative capacity ordered for each of those trunk groups. This apportionment will serve as the basis for Switched Transport mileage calculation.

(D) Where measurement capability does not exist and/or end office specific usage data is not available, ALA and FGA terminating usage will be apportioned among the end offices in the access area of the entry switch to which the service is provided, as described following. The usage to be apportioned will be the recorded usage or the assumed usage as set forth in 6.7.8 preceding.

6. Switched Access Service (Cont'd)

6.7 Rate Regulations (Cont'd)

6.7.11 Mileage Measurement (Cont'd)

(D) (Cont'd)

Such apportionment will be based on the ratio of the number of subscriber lines served by each end office in the access area to the total number of subscriber lines in the access area. The ratio thus developed is applied to the total ALA and FGA terminating usage.

Tandem Switched transport mileage for the access minutes apportioned in this manner will be calculated on an airline basis, using the V&H coordinates method, between each end office to which minutes have been apportioned and the end office switch where the ALA or FGA switching dial tone is provided.

(E) Switched Transport mileage for access minutes originating from or terminating at a remote switching system or module (RSS) or (RSM) will be calculated on an airline basis between the host end office and the RSS or RSM and the end office switch that serves as the host office and from the host office to the remote office serving the customer.

6.7.12 Shared Use

Shared use occurs when Switched Access Service and Special Access Service are provided over the same High Capacity service through a common interface. The regulations governing the provision of Shared Use Facilities are set forth in 7.2.7 following. Switched Access rates and charges as set forth in 6.8 following will apply for each channel of the high capacity facility that is used to provide Switched Access Service.

6.7.13 Directory Assistance Information Surcharge

Directory Assistance Information Surcharge rates are assessed to a customer based on the total number of access minutes. Directory Assistance Information Surcharge rates are as set forth in 6.8.3 following. The application of these rates with respect to individual Basic Service Arrangements or Feature Groups is as set forth in 6.7.1(D) preceding.

(This page filed under Transmittal No. 1)

ACCESS SERVICE

6. Switched Access Service (Cont'd)

6.8 Rates and Charges (Cont'd)

6.8.1 Switched Transport

(A) Entrance Facilities

	USOC	Monthly Rates	Nonrecurring Charge
(1) Voice Grade per point of termination	TSW2X	$ 16.04	$ 500.00
	TSW4X	24.68	500.00
(2) DS1 per point of termination	TMESW	36.00(R)	585.66
(3) DS3 per point of termination	Z0MSW	1,560.00	1,950.70

(B) Direct Trunked Transport

	USOC	Monthly Rate Fixed	Monthly Rate Per Mile
(1) Voice Grade per transport channel	1L5SW	$ 6.00	$ .40
(2) DS1 per point of termination	1L5SW	15.60(R)	3.26(R)
(3) DS3 per point of termination	1L5SW	123.75(R)	20.40(R)

(C) Tandem Switched Transport/Common Transport

		Per Access Minute
(1) Tandem Switched Transport		
Fixed per MOU		$0.000108(R)
Per mile per MOU		$0.000008(R)
(2) Tandem Switching per Access Minute		$0.001004(R)
(3) Host Remote Transmission		
Fixed per MOU		$0.001029(R)
Per Mile per MOU		$0.000029(R)
(4) Tandem End Office Multiplexing Rate per Access Minute		$0.000018(R)
(5) Dedicated Tandem Trunk Port Rate per Month per port	PT8LX/DTRPT	$1.04(R)

(D) Transport Interconnection Charge

	Per Access Minute
(1) Premium	
(a) Originating	0.000000
(b) Terminating	0.000000
(2) Non-Premium	
(a) Originating	0.000000
(b) Terminating	0.000000

Non-Facilities Based Interconnection Charge

(1) Premium	
(a) Originating	0.000000
(b) Terminating	0.000000
(2) Non-Premium	
(a) Originating	0.000000
(b) Terminating	0.000000

Rates contained in this transmittal are subject to subsequent adjustment, effective retrospectively, in the event the Commission or a court subsequently authorizes Nevada to correct its rates pursuant to pending motions, or petitions for reconsideration or waiver, or in the event of any other adjustment to an order of the Commission or a court.

(This page filed under Transmittal No. 67)

ACCESS SERVICE

6. Switched Access Service (Cont'd)

6.8 Rates and Charges (Cont'd)

6.8.1 Switched Transport (Cont'd)

	USOC	Nonrecurring Charge
(E) Installation Per Order		
(1) Per FGA, ALA line traversing Direct Trunked Transport	TPP++	$400.00
(2) Per ATA950, ATANEA, ATAXXX FGB, FGD, or 800 Access Service traversing Direct Trunked Transport or Tandem Switched Transport	TPP++	$56.38(R)

	Rate Per Call Blocked
(F) Network Blocking Charge +	$0.0037

(G) Nonchargeable Optional Features

(1) Supervisory Signaling

DX Supervisory Signaling arrangement
- Per Transport Channel Path*

SF Supervisory Signaling arrangement
- Per Transport Channel Path**

E&M Type 1 Supervisory Signaling arrangement
- Per Transport Channel Path*

E&M Type II Supervisory Signaling arrangement
- Per Transport Channel Path**

\+ Applies to ATAXXX or FGD.
* Available with Interface Groups 1 and 2.
** Available with Interface Groups 2 and 6 through 10.

Rates contained in this transmittal are subject to subsequent adjustment, effective retrospectively, in the event the Commission or a court subsequently authorizes Nevada to correct its rates pursuant to pending motions, or petitions for reconsideration or waiver, or in the event of any other adjustment to an order of the Commission or a court.

(This page filed under Transmittal No. 67)

6. Switched Access Service (Cont'd)

6.8 Rates and Charges (Cont'd)

6.8.1 Switched Transport (Cont'd)

(H) Nonchargeable Optional Features (Cont'd)

(1) Supervisory Signaling (Cont'd)

E&M Type III Supervisory Signaling
- Per Transport Channel Path*

Tandem Supervisory Signaling
- Per Transport Channel Path**

(2) Customer specification of the receive transmission level at the first point of switching within a range acceptable to the Telephone Company
- Per Transport Channel Path***

(3) Customer specification of Local Transport Termination
Four-wire termination in lieu of two-wire termination
- Per Transport Channel Path****

(4) Common Channel Signaling (CCSAC)

* Available with Interface Groups 1 and 2 for ATANEA, ATAXXX, FGC and FGD.
** Available with Interface Group 2 for ALA or FGA.
*** Available with Interface Groups 2 through 10 for ALA, ATA950, FGA and FGB. The range of transmission levels which may be specified is described in Technical Reference PUB 62500.
**** Available with ATA950 or Feature Group B with type B Transmission Performance.

(This page filed under Transmittal No. 1)

ACCESS SERVICE

6. Switched Access Service (Cont'd)

6.8 Rates and Charges (Cont'd)

6.8.1 Switched Transport (Cont'd)

(I) Chargeable Optional Features

(1) Multiplexing - per Arrangement

	USOC	Monthly Rates	Nonrecurring Charges
DS3 to DS1 - Per Arrangement	MQ3SW	$131.25(R)	None
DS1 to Voice/Digital - Per Arrangement	MQ1SW	54.00(R)	None

(2) Carrier Identification Parameter

	C1PAT	45.00	None

Rates contained in this transmittal are subject to subsequent adjustment, effective retrospectively, in the event the Commission or a court subsequently authorizes Nevada to correct its rates pursuant to pending motions, or petitions for reconsideration or waiver, or in the event of any other adjustment to an order of the Commission or a court.

(This page filed under Transmittal No. 67)

6. Switched Access Service (Cont'd)

6.8 Rates and Charges (Cont'd)

6.8.2 Local Switching

(A) Usage Sensitive Rates

Premium		Rate Per Access Minute
LS1 -	Feature Groups A and B except for FGA and FGB used to terminate traffic to a WAL provided from an equal access end office	0.001432(Ryv)
LS1A -	Access Line Arrangement and Access Trunk Arrangement 950 except for ALA and ATA950 used to terminate traffic to a WAL provided from an Equal Access End Office	$0.001432(Ryv)
LS2 -	Feature Groups C & D, FGA and FGB used to terminate traffic to a WAL provided from an equal access end office, and originating FGB routed to FGD as specified in Section 6.2.4(A)(9), preceding.	$0.001432(Ryv)
LS2A -	Access Trunk Arrangements NEA and 10XXX, ALA and ATA950 used to terminate traffic to a WAL provided from an Equal Access End Office, and originating ATA950 routed to ATAXXX as specified in Section 6.2.4(A)(9) preceding.	$0.001432(Ryv)

Feature Group Transitional (Non-Premium)

Per Access Minute $0.000849

Basic Service Arrangement Transitional (Non-Premium)

Per Access Minute $0.000849)

(B) Dedicated End Office Trunk Port

	USOC	
Per Port	PT8JX/DTRPE	$13.00(Iyz)

(C) Shared End Office Trunk Port

Per Minute of Use $0.001663(Iyz)

(D) Feature Group A Line Port

Per Port	PT8JX/FGALP	$13.00

Rates contained in this transmittal are subject to subsequent adjustment, effective retrospectively, in the event the Commission or a court subsequently authorizes Nevada to correct its rates pursuant to pending motions, or petitions for reconsideration or waiver, or in the event of any other adjustment to an order of the Commission or a court.

(y) Issued under authority of Special Permission No. 0X-XXX of the F.C.C.
(v) Revised rates reflects decrease from currently effective rates.
(z) Revised rates brings rate back to currently effective level.

(This page filed under Transmittal No. 68)

6. Switched Access Service (Cont'd)

6.8 Rates and Charges (Cont'd)

6.8.2 Local Switching (Cont'd)

(D) Common Switching Optional Features and BSEs

	FID/USOC	
Call Denial on Line or Hunt Group (available with ALA or FGA) - Per Transmission Path or Transmission Path Group	CAD	
Service Code Denial on Line or Hunt Group (available with ALA or FGA) - Per Transmission Path or Transmission Path Group	SCD	
Hunt Group Arrangement (available with FGA) - Per Transmission Path Group	HML/HTG	
Hunt Group Arrangement (Available with ALA)(BSE) - Per Transmission Path Group	CF3HG/MLHTG	Monthly Rate $0.12
Uniform Call Distribution Arrangement (available with FGA) - Per Transmission Path Group	UCD	

(This page filed under Transmittal No. 1)

6. Switched Access Service (Cont'd)

6.8 Rates and Charges (Cont'd)

6.8.2 Local Switching (Cont'd)

(D) Common Switching Optional Features and BSEs (Cont'd)

	FID/USOC	
Uniform Call Distribution Arrangement (Available with ALA)(BSE) - Per Transmission Path Group	CF3UC/CDUHT	Monthly Rate $0.15
Nonhunting Number for Use with Hunt Group Arrangement or Uniform Call Distribution Arrangement (available with FGA) - Per Transmission Path	NHN	
Nonhunting Number for Use with Hunt Group Arrangement or Uniform Call Distribution Arrangement (available with ALA) - Per Transmission Path Group	MLHPT	
Automatic Number Identification/ Charge Number (available with ATA950 or FGB, ATANEA or FGC and FGD or FGD with CCSAC Optional Feature) - Per Transmission Path Group	ANI/SLCHG	
Automatic Number Identification/ Charge Number (available with ATAXXX and ATAXXX with CCSAC Optional Feature) - Per Call	BEANI	Monthly Rate $0.000164

(This page filed under Transmittal No. 1)

6. Switched Access Service (Cont'd)

6.8 Rates and Charges (Cont'd)

6.8.2 Local Switching (Cont'd)

(D) Common Switching Optional Features and BSEs (Cont'd)

	FID/USOC
Up to 7 Digit Outpulsing of Access Digits to Customer (available with ATA950 or FGB) - Per Transmission Path Group	USDO
Cut-through (available with ATAXXX or FGD) - Per End Office or Access Tandem	CTO
Delay Dial Start-Pulsing Signaling (available with ATANEA or FGC) - Per Transmission Path Group	DDSP
Immediate Dial Pulse Address Signaling (available with ATANEA or FGC) - Per Transmission Path Group	ADS IDP
Dial Pulse Address Signaling (available with ATANEA or FGC) - Per Transmission Path Group	ADS DP
Service Class Routing (available with ATANEA or FGC and ATAXXX or FGD) - Per Transmission Path Group	SCRT
Alternate Traffic Routing (available with ATANEA or FGC and ATAXXX or FGD) - Per Transmission Path Group	ARTG

(This page filed under Transmittal No. 1)

6. Switched Access Service (Cont'd)

6.8 Rates and Charges (Cont'd)

6.8.2 Local Switching (Cont'd)

(D) Common Switching Optional Features and BSEs (Cont'd)

		FID/USOC
Trunk Access Limitation Arrangement (available with ATANEA or FGC and ATAXXX or FGD) - Per End Office		CHOK
Call Gapping Arrangement (available with ATAXXX or FGD) - Per End Office		GAP
International Carrier Option (available with ATAXXX or FGD) - Per End Office and Access Tandem		INCO
Band Advance Arrangement Access Service utilized in the provision of WATS or WATS-type Services (available with all Basic Service Arrangements or Feature Groups A, B, C, D) - Per Arrangement		
Call Transfer (BSE) (Available with ALA) - Per Transmission Path Group	USOC TRC3W	Monthly Rate ICB

(This page filed under Transmittal No. 1)

6. Switched Access Service (Cont'd)

6.8 Rates and Charges (Cont'd)

6.8.2 Local Switching (Cont'd)

(D) Common Switching Optional Features and BSEs (Cont'd)

	FID
End Office End User Line Service Screening for Use with Special Access Service utilized in the provision of WATS or WATS-type Services (available with ATANEA or FGC and ATAXXX or FGD) - Per Transmission Path	BAND
Hunt Group Arrangement for Use with Special Access Service utilized in the provision of WATS or WATS-type Services (available with all Basic Service Arrangements or Feature Groups A, B, C and D) - Per Transmission Path Group	HML/HTG
Uniform Call Distribution Arrangement for Use with Special Access Service utilized in the provision of WATS of WATS-type Services (available with all Basic Service Arrangements or Feature Groups A, B, C and D) - Per Transmission Path Group	HTY UD

(This page filed under Transmittal No. 1)

6. Switched Access Service (Cont'd)

6.8 Rates and Charges (Cont'd)

6.8.2 Local Switching (Cont'd)

(D) Common Switching Optional Features and BSEs (Cont'd)

	FID/USOC
Nonhunting Number for Use with Hunt Group Arrangement or Uniform Call Distribution Arrangement for use with Special Access Service utilized in the provision of WATS or WATS-type Services (available with all Basic Service Arrangements or Feature Groups A, B, C and D) - Per Transmission Path	NHN
Calling Party Number (CPN)** - Per Transmission path group	SLCPN
Carrier Selection Parameter (CSP)** - Per transmission path group	NR4CS/SLCSP

Access Transport Parameter***
- Per Customer per switch

	FID/ USOC	Monthly	Nonrecurring
Direct Inward Dialing (DID)* (Available with ALA or FGA) Up to seven-digit outpulsing of the called number provided to the customer premises. per trunk equipped	NDT	$7.99	$192.79
Answer Supervision - Lineside (Available with ALA) - per line	ANSPF	ICB	ICB

* DID rate are in addition to usage billed on assumed minutes of use per month.

** Available only with FGD or ATAXXX with CCSAC optional feature.

*** Available only with FGD or ATAXXX with CCSAC and 64CCC optional features.

(This page filed under Transmittal No. 1)

6. Switched Access Service (Cont'd)

6.8 Rates and Charges (Cont'd)

6.8.2 Local Switching (Cont'd)

(E) Switched Transport Termination Nonchargeable Options

	FID
(1) Line Side Terminations (For ALA or FGA)	
Two Way Operation	
- Dial Pulse with Loop Start	NC+++A
- Dial Pulse with Ground Start	NC+++E
- DTMF with Loop Start	NC+++F
- DTMF with Ground Start	NC+++G

(This page filed under Transmittal No. 1)

6. Switched Access Service (Cont'd)

6.8 Rates and Charges (Cont'd)

6.8.2 Local Switching (Cont'd)

(E) Switched Transport Termination Nonchargeable Options (Cont'd)

	FID
(1) Line Side Terminations (For ALA or FGA) (Cont'd)	
Terminating Operation	
- Dial Pulse with Loop Start	NC+++N
- Dial Pulse with Ground Start	NC+++P
- DTMF with Loop Start	NC+++R
- DTMF with Ground Start	NC+++S
Originating Operation	
- Loop Start	NC+++U
- Ground Start	NC+++V
(2) Trunk Side Terminations (For all Access Trunk Arrangements or FGB, FGC and FGD)	
Standard Trunk for Originating, Terminating or Two-Way Operation (available with all Access Trunk Arrangements or FGB, FGC and FGD)	TTC SO TTC ST TTC TY
Rotary Dial Station Signaling Trunk (available with ATA950 or FGB)	TTC RD

(This page filed under Transmittal No. 1)

6. Switched Access Service (Cont'd)

6.8 Rates and Charges (Cont'd)

6.8.2 Local Switching (Cont'd)

(E) Switched Transport Termination Nonchargeable Options (Cont'd)

	FID
(2) Trunk Side Terminations (For all Access Trunk Arrangements or FGB, FGC and FGD) (Cont'd)	
Operator Trunks - MOS - Coin, Non-Coin or Combined Coin and Non-Coin TTC CC (available with ATANEA or FGC)	TTC CO TTC NC
Coin or Combined coin and non-coin (Available with ATAXXX or FGD)	TTC FF
Operator Trunks - EAOSS - Full Feature Arrangement (available with ATAXXX or FGD)	TTC FF
(3) Tandem Signaling (MF or SS7) (available with ATAXXX or FGD)	

(This page filed under Transmittal No. 1)

6. Switched Access Service (Cont'd)

6.8 Rates and Charges (Cont'd)

6.8.3 Directory Assistance Information Surcharge

	Premium	Transitional
- Per 100 Access Minutes	$0.000000	0.000000

6.8.4 Network Access Services

	USOC	Monthly Rates	Nonrecurring Charges
(A) DNAL Rates and Charges			
(1) DNAL Termination			
- Per Point of Termination			
- 2 wire	T6E2X	$ 8.68	$747.94
- 4 wire	T6E4X	17.35	747.94

(This page filed under Transmittal No. 1)

6. Switched Access Service (Cont'd)

6.8 Rates and Charges (Cont'd)

6.8.4 Network Access Services (Cont'd)

	USOC	Monthly Rates	Nonrecurring Charges
(A) DNAL (Cont'd)			
(2) DNAL Mileage			
DNAL Mileage Facility			
Per mile	CMF	$ 0.70	None
DNAL Mileage Termination			
Per Termination	CMT	11.29	None
(B) DNAL BSEs			
(1) #Availability and Stop Hunting Control Arrangement	(BSE)*	4.20	
(2) Port Access To Verify Integrity of Subscriber Lines -Per Port (2 ports required)	(BSE) VE1SL	None	$500.00

Requires the use of DNAL as specified in Section 6.2.6A.

* Availability and Stop Hunting Control Arrangement is known as Make Busy Key in Bell Operating Companies ONA Special Report #5.

(This page filed under Transmittal No. 1)

6. Switched Access Service (Cont'd)

6.8 Rates and Charges (Cont'd)

6.8.5

6.8.6 Message Unit Credit

	Rates
- Per originating ALA or Feature Group A access minute	$0.001509(I)

6.8.7 SS7 Interconnection

	USOC	Nonrecurring Charge	Monthly Rate
(A) SS7 Links			
- per Link	SL7	$1,131.17	$ 11.29
- per Mile			.70
(B) STP Port			
- per Port	SLPTC		$1,046.00

6.8.8 Toll Free Access Service

	Recurring Charges
Basic Toll Free Access Query	
- per Query	$0.005183
POTS Translation	
- per Query	0.000000
Multiple Destination Routing	
- per Query	0.000499
Six Digit Master Number List Turnaround	
- per Query	0.003652

Rates contained in this transmittal are subject to subsequent adjustment, effective retrospectively, in the event the Commission or a court subsequently authorizes Nevada to correct its rates pursuant to pending motions, or petitions for reconsideration or waiver, or in the event of any other adjustment to an order of the Commission or a court.

(This page filed under Transmittal No. 44)

6. Switched Access Service (Cont'd)

6.8 Rates and Charges (Cont'd)

6.8.9 Billing Name and Address Service

Set -up Fee -per CIC	$3,000.00
BNA Found -per query	.77
BNA Not Found -per query	.39

(This page filed under Transmittal No. 1)

ACCESS SERVICE

	Page No.	
7. SPECIAL ACCESS SERVICE	7-3	(N)
7.1 General	7-3	
7.1.1 Channel Types	7-3	
7.1.2 Service Descriptions	7-6	
7.1.3 Service Configurations	7-9	
7.1.4 Alternate Use	7-13	
7.1.5 Special Facilities Routing	7-14	
7.1.6 Design Layout Report	7-14	
7.1.7 Acceptance Testing	7-14	
7.1.8 Ordering Options and Conditions	7-15	
7.2 Rate Regulations	7-16	
7.2.1 Rate Categories	7-16	
7.2.2 Types of Rates and Charges	7-21	
7.2.3 Moves	7-27	
7.2.4 Minimum Periods	7-27	
7.2.5 Mileage Measurement	7-27	
7.2.6 Facility Hubs	7-29	
7.2.7 Shared Use Analog and Digital High Capacity Services	7-31	
7.2.8 Extension of WATS Access Service	7-33	
7.3 Surcharge for Special Access Service	7-34	
7.3.1 General	7-34	
7.3.2 Application	7-34	
7.3.3 Exemption of Special Access Service	7-35	
7.3.4 Rate Regulations	7-36	
7.3.5 Rate	7-38	
7.4 Message Station Equipment Recovery Charge	7-39	
7.4.1 General	7-39	
7.4.2 Rate	7-39	
7.5 Reserved for Future Use	7-40	
7.6 Digital Data Over Voice	7-41	
7.6.1 Basic Channel Description	7-41	
7.6.2 Technical Specifications Packages	7-41	
7.6.3 Channel Interfaces	7-41	
7.6.4 Optional Features and Functions	7-41	
7.6.5 Rates and Charges	7-42	(N)

(This page filed under Transmittal No. 1)

ACCESS SERVICE

	Page No.	
7. SPECIAL ACCESS SERVICE (Cont'd)		
7.7 Voice Grade Service	7-43	
7.7.1 Basic Channel Description	7-43	
7.7.2 Technical Specifications Packages	7-43	
7.7.3 Channel Interface	7-44	
7.7.4 Optional Features and Functions	7-44	
7.7.5 WATS Access Line (WAL) Service	7-53	
7.7.6 Rates and Charges	7-56	
7.8 Program Audio Service	7-62	
7.8.1 Basic Channel Description	7-62	
7.8.2 Technical Specifications Packages	7-62	
7.8.3 Channel Interfaces	7-62	
7.8.4 Optional Features and Functions	7-63	
7.8.5 Rates and Charges	7-64	
7.9 Video Service	7-66	
7.9.1 Basic Channel Description	7-66	
7.9.2 Technical Specifications Packages	7-66	
7.9.3 Channel Interfaces	7-68	
7.9.4 Rates and Charges	7-69	
7.10 Digital Data Service	7-70	
7.10.1 Basic Channel Description	7-70	
7.10.2 Technical Specifications Packages	7-71	
7.10.3 Channel Interfaces	7-72	
7.10.4 Optional Features and Functions	7-72	
7.10.5 Rates and Charges	7-73	
7.11 High Capacity Service	7-75	
7.11.1 Basic Channel Description	7-75	
7.11.2 Technical Specifications Packages	7-75	
7.11.3 Channel Interfaces	7-76	
7.11.4 Optional Features and Functions	7-76	
7.11.5 Rates and Charges General Description	7-79	
7.11.5.1 DS3 High Capacity Service Rate Description	7-79	
7.11.5.2 Rates and Charges	7-82	
7.12 Individual Case Filings	7-85	(N)

(This page filed under Transmittal No. 1)

7. Special Access Service

7.1 General

Special Access Service provides a transmission path to connect customer designated premises*, directly, through a Telephone Company hub or hubs where bridging or multiplexing functions are performed, or to connect a customer designated premises and a WATS Serving Office. Special Access Service includes all exchange access not utilizing Telephone Company end office switches.

The connections provided by Special Access Service can be either analog or digital. Analog connections are differentiated by spectrum and bandwidth. Digital connections are differentiated by bit rate.

Special Access Services are ordered under the Access Order provisions set forth in Section 5. preceding.

Rates and charges for Special Access Service are set forth in Sections 7.7.6, 7.8.5, 7.9.4, 7.10.5, and 7.11.5 following, with the exception of the services provided by the Telephone Company in the Metropolitan Statistical Areas (MSAs) in which the Telephone Company has received Phase II pricing flexibility pursuant to Subpart H of Part 69 of the Commission's Rules. The rates and charges for the Special Access Services in the MSAs that have received Phase II pricing flexibility are set forth in Section 22. (N) (N)

7.1.1 Channel Types

There are seven types of channels used to provide Special Access Services. Each type has its own characteristics. All are subdivided by one or more of the following:

- Transmission specifications,
- Bandwidth,
- Speed (i.e., bit rate),
- Spectrum

Customers can order a basic channel and select from a list of available transmission parameters and channel interfaces those that they desire to meet specific communications requirements.

For purposes of ordering channels, each has been identified as a type of Special Access Service. However, such identification is not intended to limit a customer's use of the channel nor to imply that the channel is limited to a particular use. For example, if a customer's equipment is capable of transmitting voice over a channel that is identified as a Metallic Service in this tariff, there is no restriction against doing so.

* Telephone Company Centrex CO and CO-like switches and packet switches included in Public Packet Switching Network (PPSN) Service and Interconnection Chambers for EIS are considered to be a customer designated premises for purposes of this tariff.

(This page filed under Transmittal No. 43)

7. Special Access Service (Cont'd)

7.1 General (Cont'd)

7.1.1 Channel Types (Cont'd)

Following is a brief description of each type of channel:

Voice Grade - a channel for the transmission of analog signals within an approximate bandwidth of 300 to 3000Hz.

Program Audio - a channel for the transmission of audio signals. The nominal frequency bandwidths are from 200 to 3500 Hz, from 100 to 5000 Hz, from 50 to 8000 Hz, or from 50 to 15000 Hz.

Video - a channel for the transmission of standard 525 line 60 field monochrome or National Television Systems Committee color video signal and one or two associated 5 or 15 kHz audio signals. The bandwidth is either 30 Hz to 4.5 MHz or 30 Hz to 6.6 MHz.

Digital Data - a channel for the digital transmission of synchronous serial data at rates of 2.4, 4.8, 9.6, 56 or 64 kbps.

High Capacity - a channel for the transmission of isochronous serial digital data at rates of 1.544, 3.152, 6.312, 44.736 or 274.176 Mbps.

7. Special Access Service (Cont'd)

7.1 General (Cont'd)

7.1.1 Channel Types (Cont'd)

Detailed descriptions of each of the channel types are provided in 7.5 through 7.11 following.

The customer also has the option of ordering Voice Grade and High Capacity facilities (i.e., 1.544 Mbps, 3.152 Mbps, 6.312 Mbps, 44.736 Mbps and 274.176 Mbps) to Telephone Company hubs for multiplexing to individual channels of a lower capacity or bandwidth. Descriptions of the types of multiplexing available at the hubs, as well as the number of individual channels which may be derived from each type of facility are set forth in 7.7 and 7.11 following. Additionally, the customer may specify optional features for the individual channels derived from the facility to further tailor the channel to meet specific communications requirements. Descriptions of the optional features and functions available are set forth in 7.2.1 following.

For example, a customer may order a 3.152 Mbps High Capacity channel from a customer designated premises to a Telephone Company hub for multiplexing to two 1.544 Mbps channels. The 1.544 Mbps channels may be further multiplexed at the same or a different hub to Voice Grade channels or may be extended to other customer designated premises or hubs. Optional features may be added to either the 1.544 Mbps or the Voice Grade channels.

7. Special Access Service (Cont'd)

7.1 General (Cont'd)

7.1.2 Service Descriptions

For the purposes of ordering, the categories of Special Access Service are:

Program Audio (AP)
Video (TV)
Voice Grade (VG)
-WATS Access Line (WAL)
Digital Data (DA)
High Capacity (HC)

Each service consists of a basic channel to which a technical specifications package (customized or predefined), channel interface(s) and, when desired, optional features and functions are added to construct the service desired by the customer. Technical specifications packages and optional features and functions are described in this section. Channel interfaces are described in 15.3 and 15.4 following.

Customized technical specifications packages will be provided where technically feasible. If the Telephone Company determines that the requested parameter specifications are not compatible, the customer will be advised and given the opportunity to change the order.

When a customized channel is ordered the customer will be notified whether Additional Engineering Charges apply. In such cases, the customer will be given an estimate of the hours to be billed before any further action is taken on the order.

7. Special Access Service (Cont'd)

7.1 General (Cont'd)

7.1.2 Service Descriptions (Cont'd)

The channel description specifies the characteristics of the basic channel and indicates whether the channel is provided between customer designated premises, between a customer designated premises and a Telephone Company hub where bridging or multiplexing functions are performed, between hubs, or between a customer designated premises and a WATS Serving Office.

(A) Information pertaining to the technical specifications packages indicates the transmission parameters that are available with each package. This information is displayed in a matrix with the transmission parameters listed down the left side and the packages listed across the top. Each package is identified by a code, e.g., VGC. The first two letters of the code indicate the category of Special Access Service to which the parameters are applicable. These two letter codes are shown above in parentheses following the category of Special Access Service. The letter "C" following the two letter code indicates the technical specifications package for a customized service. The letter "w" following the two letter code indicates the technical specifications package for a voice grade Special Access Service used in the provision of WATS or WATS-type service using a Telephone Company designated WATS Serving Office. A numeric or alpha-numeric designation following the two letter code indicates the specific predefined package. For a customized service, the customer may select any parameters available with that category of service as long as the parameters are compatible. When appropriate, the Technical Reference which contains detailed specifications for the parameters is shown following the matrix.

7. Special Access Service (Cont'd)

7.1 General (Cont'd)

7.1.2 Service Descriptions (Cont'd)

(B) Channel interfaces at each Point of Termination on a two-point service may be symetrical or asymetrical. On a multipoint service they may also be symetrical or asymetrical, but communications can only be provided between compatible channel interfaces. Only certain channel interfaces are compatible. These are set forth in 15.3.5 following, in a combination format.

(C) Only certain channel interface combinations are available with the predefined technical specifications packages. These are delineated in the Technical References set forth in (F) following. When a customized channel is requested, all channel interface combinations available with the specified type of service are available with the customized channel.

(D) The optional features and functions available with each type of Special Access Service are described in this section. The optional features and functions information also indicates with which technical specifications packages they are available. Such information is displayed in a matrix with the optional feature or function listed down the left side and the technical specifications package listed across the top.

(E) The Telephone Company will maintain existing transmission specifications on services installed prior to the effective date of this tariff, except that existing services with performance specifications exceeding the standards listed in this provision will be maintained at the performance levels specified in this tariff.

7. Special Access Service (Cont'd)

7.1 General (Cont'd)

7.1.2 Service Descriptions (Cont'd)

(F) All services installed after the effective date of this tariff will conform to the transmission specification standards contained in this tariff or in the following Technical References for each category of service:

Digital Data Over Voice	PUB L-780080-PB/NB
Voice Grade	TR-NPL-000335
	PUB 41004, Table 4
- WATS Access Line	TR-NPL-000334
Program Audio	TR-NPL-000337
Video	TR-NPL-000338
Digital Data	PUB 62507
Digital Data	PUB 62310
High Capacity	PUB 62411
High Capacity	TA-TSY-000342

7.1.3 Service Configurations

There are two types of service configurations over which Special Access Services are provided: two-point service and multipoint service.

(A) Two-Point Service

A two-point service connects two customer designated premises, either on a directly connected basis or through a hub where multiplexing functions are performed, or a customer designated premises and a WATS Serving Office (WSO).

(This page filed under Transmittal No. 1)

7. Special Access Service (Cont'd)

7.1.3 Service Conficrurations (Cont'd)

(A) Two-Point Service (Cont,d)

Applicable rate elements are:
- Channel Terminations
- Channel Mileage (as applicable)
- optional Features and F'tmctions (when applicable)

A Special Access Surcharge, as set forth in 7.3 following and a Message Station Equipment Recovery Charge, as set forth in 7.4 following, may be applicable.

The following diagram depicts a two-point Voice Grade service connecting two customer designated premises (CDP). The service is provided with C-Type conditioning.

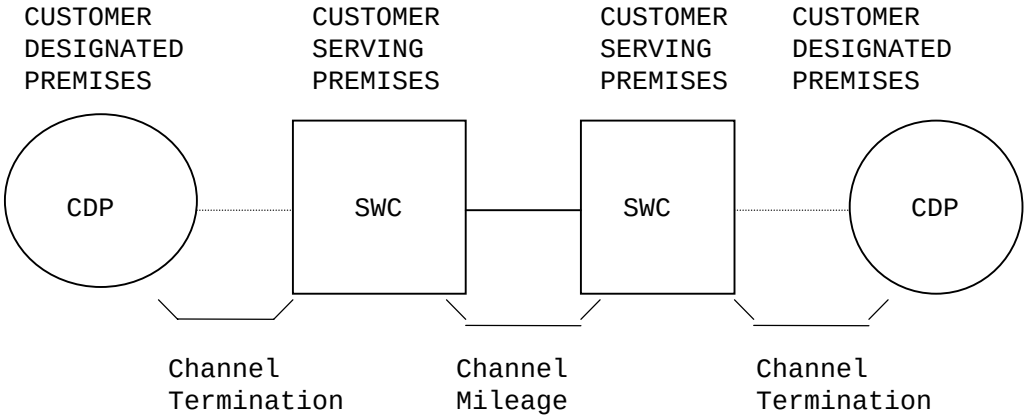

Optional Features and Functions
C-Type Conditioning

Applicable rate elements are:
- Channel Terminations (applicable one (1) per CDP*)
- Channel Mileage (i section, Channel Mileage Facility per mile plus 2 Channel Mileage Terminations)
- C-Type conditioning Optional Feature

* When CDP is an Interconnection Chamber (See EIS Service Section 18 following) the EIS Channel Termination as described in Section 18 following will apply.

(This page filed under Transmittal No. 1)

7. Special Access Service (Cont'd)

7.1 General (Cont'd)

7.1.3 Service Configurations (Cont'd)

(B) Multipoint Service

Multipoint service connects three or more customer designated premises through one or more Telephone Company hubs. Only certain types of Special Access Service are provided as multipoint service. These are so designated in the descriptions for the appropriate channel.

The channel between hubs (i.e., bridging locations) on a multipoint service is a mid-link. There is no limitation on the number of mid-links available with a multipoint service. However, when more than three mid-links in tandem are provided, the quality of the overall service may be degraded.

Multipoint service utilizing a customized technical specifications package, as set forth in 7.1.2 preceding, will be provided when technically possible. If the Telephone Company determines that the requested characteristics for a multipoint service are not compatible, the customer will be advised and given the opportunity to change the order.

When ordering, the customer will specify the desired bridging hub(s). EXCHANGE CARRIER ASSOCIATION TARIFF F.C.C. NO. 4 identifies serving wire centers, hub locations and the type of bridging functions available.

Applicable Rate Elements are:

- Channel Terminations (one per customer designated premises)

7. Special Access Service (Cont'd)

7.1 General (Cont'd)

7.1.3 Service Configurations (Cont'd)

(B) Multipoint Service (Cont'd)

- Channel Mileage (as applicable between the serving wire center for each customer designated premises and the hub and between hubs).
- Bridging
- Additional Optional Features and Functions (when applicable).

The Special Access Surcharge, as set forth in 7.3 following, and a Message Station Equipment Recovery Charge, as set forth in 7.4 following, may be applicable.

Example: Voice Grade multipoint service connecting four customer designated premises (CDP) via two customer specified bridging hubs.

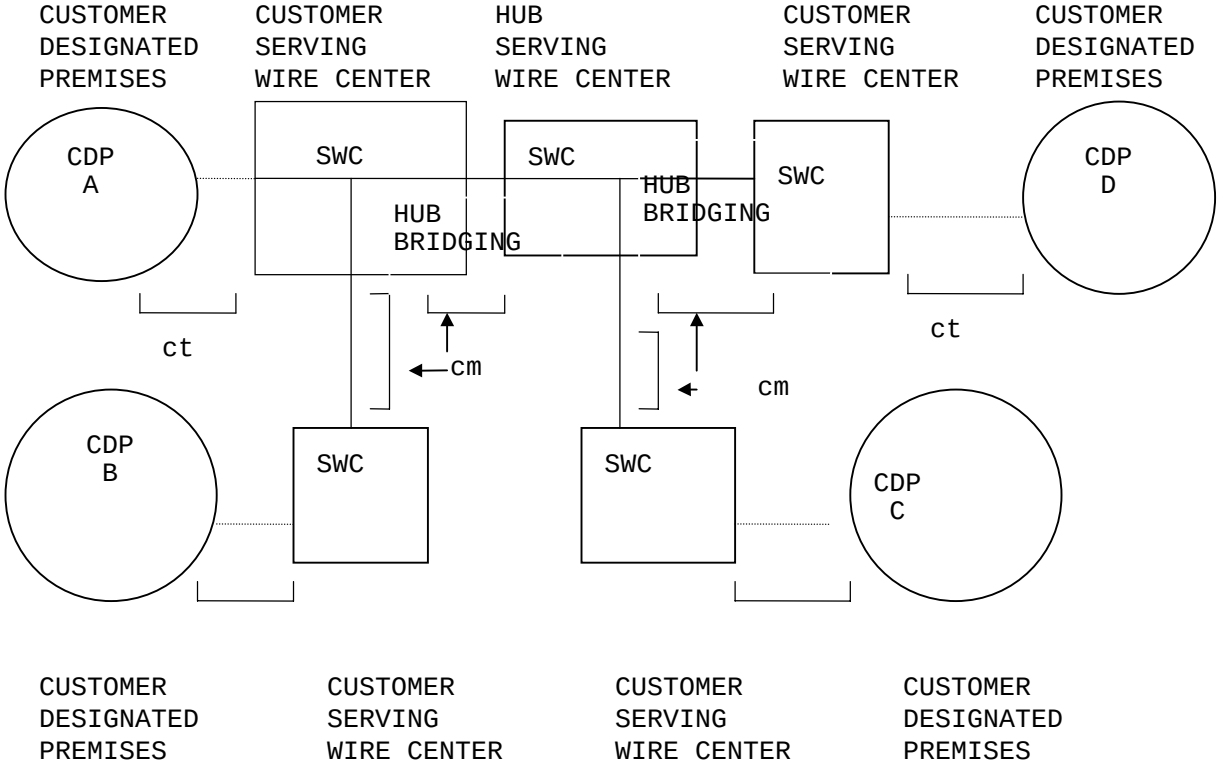

CT - Channel Termination
CM - Channel Mileage

(This page filed under Transmittal No. 4)

7. Special Access Service (Cont'd)

7.1 General (Cont'd)

7.1.3 Service Configurations (Cont'd)

(B) Multipoint Service (Cont'd)

Applicable rate elements are:

- Channel Terminations (4 applicable)
- Channel Mileage (4 sections, Channel Mileage Facility per mile plus 2 Channel Mileage Terminations per section)
- Bridging Optional Feature (6 applicable, i.e., each bridge port)

7.1.4 Alternate Use

Alternate Use occurs when a service is arranged by the Telephone Company so that the customer can select different types of transmission at different times. A customer may use a service in any privately beneficial manner. However, where technical or engineering changes are required to effectuate an alternate use, the Telephone Company will make such special arrangements available on an individual case basis.

The arrangement required to transfer the service from one operation to the other (i.e., the transfer relay and control leads) will be rated and provided on an individual case basis and filed in Section 12., Specialized Service or Arrangements. The customer will pay the stated tariff rates for the Access Service rate elements for the service ordered (i.e., Channel Terminations, Channel Mileage [as applicable] and Optional Features and Functions [if any]).

7. Special Access Service (Cont'd)

7.1 General (Cont'd)

7.1.5 Special Facilities Routing

A customer may request that the facilities used to provide Special Access Service be specially routed. The regulations, rates and charges for Special Facilities Routing (i.e., Avoidance, Diversity and Cable-Only) are set forth in 11. following.

7.1.6 Design Layout Report

At the request of the customer, the Telephone Company will provide to the customer the make-up of the facilities and services provided under this tariff as Special Access Service to aid the customer in designing its overall service. This information will be provided in the form of a Design Layout Report. The Design Layout Report will be provided to the customer at no charge, and will be reissued or updated whenever these facilities are materially changed.

7.1.7 Acceptance Testing

At no additional charge, the Telephone Company will, at the customer's request, cooperatively test at the time of installation, the following parameters:

(A) For Voice Grade analog services, acceptance test will include tests for loss, 3-tone slope, DC continuity, operational signaling, C-notched noise, and C-message noise when these parameters are applicable and specified in the order for service. Additionally, for Voice Grade services, a balance (improved loss) test will be made if the customer has ordered the improved loss optional feature.

7. Special Access Service (Cont'd)

7.1 General (Cont'd)

7.1.7 Acceptance Testing (Cont'd)

(B) For other analog services (i.e., Program Audio, and Video) and for digital services (i.e., Digital Data and High Capacity) service, acceptance tests will include tests for the parameters applicable to the service as specified by the customer in the order for service.

In addition to the above tests, Additional Cooperative Acceptance Testing for Voice Grade service to test other parameters, as described in 13.3.5(B) following, is available at the customer's request. All test results will be made available to the customer upon request.

7.1.8 Ordering Options and Conditions

Special Access Service is ordered under the Access Order provisions set forth in 5. preceding. Also included in that section are other charges which may be associated with ordering Special Access Service (e.g., Service Date Change Charges, Cancellation Charges, etc.).

7. Special Access Service (Cont'd)

7.2 Rate Regulations

This section contains the specific regulations governing the rates and charges that apply for Special Access.

7.2.1 Rate Categories

There are three basic rate categories which apply to Special Access Service:

- Channel Terminations (described in 7.2.1(A) following)
- Channel Mileage (described in 7.2.1(B) following)
- Optional Features and Functions (described in 7.2.1(C) following)

7. Special Access Service (Cont'd)

7.2 Rate Regulations (Cont'd)

7.2.1 Rate Categories (Cont'd)

(A) Channel Termination

The Channel Termination rate category provides for the communications path between a customer designated premises and the serving wire center of that premises. It also provides for the unrecovered portion of inside wire investment assigned to Special Access Service. Included as part of the Channel Termination is a standard channel interface arrangement which defines the technical characteristics associated with the type of facilities to which the access service is to be connected at the Point of Termination (POT) and the type of signaling capability, if any. The signaling capability is provided as an optional feature as set forth in (C) following. One Channel Termination charge applies per customer designated premises at which the channel is terminated. For WATS Access Line Service, only one Channel Termination applies per service. This charge will apply even if the customer designated premises and the serving wire center are collocated in a Telephone Company building.

(B) Channel Mileage

The Channel Mileage rate category provides for the transmission facilities between the serving wire centers associated with two customer designated premises, between the serving wire centers associated with a customer designated premises and a Telephone Company Hub or between two Telephone Company Hubs. Channel mileage rates are made up of the Channel Mileage Facility rate and the Channel Mileage Termination rate.

7. Special Access Service (Cont'd)

7.2 Rate Regulations (Cont'd)

7.2.1 Rate Categories (Cont'd)

(B) Channel Mileage (Cont'd)

(1) Channel Mileage Facility

The Channel Mileage Facility rate recovers the cost for the transmission path which extends between the Telephone Company serving wire centers and/or hub(s) and includes primarily outside plant used to provide the facility.

When the customer orders High Capacity Service as described in 7.11 and 7.11.5 following, the Channel Mileage Facility must be ordered in conjunction with an associated Channel Termination as described in 7.2.1.(A), preceding.

(2) Channel Mileage Termination

The Channel Mileage Termination rate recovers the cost for end office equipment associated with terminating the facility (i.e., basic circuit equipment and terminations at serving wire centers and hubs). The Channel Mileage Termination rate will apply at the serving wire center(s) for each customer designated premises and Telephone Company hub where the channel is terminated. If the Channel Mileage is between Telephone Company bridging hubs, the Channel Mileage Termination rate will apply per Telephone Company designated hub. When the Channel Mileage Facility is zero (i.e., collocated serving wire centers), neither the Channel Mileage Facility rate nor the Channel Mileage Termination rate will apply.

7. Special Access Service (Cont'd)

7.2 Rate Regulations (Cont'd)

7.2.1 Rate Categories (Cont'd)

(C) Optional Features and Functions

The Optional Features and Functions rate category provides for optional features and functions which may be added to a Special Access Service to improve its quality or utility to meet specific communications requirements. These are not necessarily identifiable with specific equipment, but rather represent the end result in terms of performance characteristics which may be obtained. These characteristics may be obtained by using various combinations of equipment. Although the equipment necessary to perform a specified function may be installed at various locations along the path of the service, they will be charged for as a single rate element.

Examples of Optional Features and Functions that are available include, but are not limited to, the following:

- Signaling Capability
- Hubbing Functions
- Conditioning
- Transfer Arrangements

A hub is a Telephone Company designated serving wire center at which bridging or multiplexing functions are performed. The bridging functions performed are to connect three or more customer designated premises in a multipoint arrangement. The multiplexing functions are to channelize analog or digital facilities to individual services requiring a lower capacity or bandwidth. EXCHANGE CARRIER ASSOCIATION TARIFF F.C.C. NO. 4 identifies serving wire centers, hub locations and the type of bridging or multiplexing functions available.

7. Special Access Service (Cont'd)

7.2 Rate Regulations (Cont'd)

7.2.1 Rate Categories (Cont'd)

(C) Optional Features and Functions (Cont'd)

Descriptions for each of the available Optional Features and Functions are set forth in 7.5 through 7.11 following.

(D) Collocation Transport

Collocation Transport provides for the transmission facilities between collocation arrangements located in Telephone Company Central Offices.

There are two components of Collocation Transport.

(1) Inter/Intra Office Fixed

Inter/Intra office fixed rate element provides for the electronic equipment required to terminate a channel between two collocation arrangements located either in the same central office (intra) or in two separate central offices (inter).

When the DS1 Intra Office Fixed channel is ordered between two collocation arrangements that are for the same collocator, it will be provisioned as a temporary arrangement and will be in service until the collocator's own facilities are installed, not to exceed 150 days. There is no additional charge to disconnect these temporary facilities.

(2) Inter Office Per Mile

The Per Mile charge provides for the electronic equipment and facilities necessary to provide the interoffice transport between two collocation arrangements.

7. Special Access Service (Cont'd)

7.2 Rate Regulations (Cont'd)

7.2.2 Types of Rates and Charges

There are three types of rates and charges. These are monthly rates, daily rates and nonrecurring charges. The rates and charges are described as follows:

The rates and charges in effect at the time that the Special Access Service is installed and accepted by the customer are the rates and charges which will be billed to the customer requesting the service.

(A) Monthly Rates

Monthly rates are recurring rates that apply each month or fraction thereof that a Special Access Service is provided. For billing purposes, each month is considered to have 30 days.

(B) Daily Rates

Daily rates are recurring rates that apply to each 24 hour period or fraction thereof that a Program Audio or Video Special Access Service is provided for part-time use. For purposes of applying daily rates, the 24 hour period is not limited to a calendar day.

Part-time Video or Program Audio Service provided within a consecutive 30 day period will be charged the daily rate, not to exceed an amount equal to the monthly rate. For each subsequent day or part day, a charge equal to 1/30th of the monthly rate shall apply.

7. Special Access Service (Cont'd)

7.2 Rate Regulations (Cont'd)

7.2.2 Types of Rates and Charges (Cont'd)

(C) Nonrecurring Charges

Nonrecurring charges are one-time charges that apply for specific work activity (i.e., installation or change to an existing service). The types of nonrecurring charges that apply for Special Access Service are: installation of service, installation of optional features and functions, and service rearrangements.

(1) Installation of Service

Nonrecurring charges apply to each service installed. The nonrecurring charges for the installation of service are set for each channel type as a nonrecurring charge for the Channel Termination.

(2) Installation of Optional Features and Functions

Nonrecurring charges apply for the installation of some of the optional features and functions available with Special Access Service. The charge applies whether the feature or function is installed coincident with the initial installation of service or at any time subsequent to the installation of the service.

The optional features for which nonrecurring charges apply are:

- Voice Grade Data Capability
- Voice Grade Telephoto Capability
- Program Audio Gain Conditioning

7. Special Access Service (Cont'd)

7.2 Rate Regulations (Cont'd)

7.2.2 Types of Rates and Charges (Cont'd)

(C) Nonrecurring Charges (Cont'd)

(3) Service Rearrangements

Service rearrangements are changes to existing (installed) services which may be administrative only in nature, as set forth following, or that involve actual physical change to the service. Changes to pending orders are set forth in 5.2.2 preceding.

Changes in the physical location of the point of termination or customer designated premises are moves as set forth in 7.2.3 following.

Changes in the type of Service or Channel Termination which result in a change of the minimum period requirement will be treated as a discontinuance of the service and an installation of a new service.

Customers with DS3 service provided under Individual Case Basis (ICB) in other portions of this tariff or with a month-to-month billing period who wish to convert their DS3 service to a 1, 3 or 5 year billing period, may do so without penalty or assessment of new nonrecurring charges, providing there is no physical change in the service arrangement.

Changes in ownership or transfer of responsibility from one customer to another will be treated as a discontinuance of the service and an installation of a new service. In the event the change in ownership or transfer of responsibility as set forth in 2.1.2(A) preceding where there is no change in facilities or arrangements, the change will be treated as an administrative change without charge to the customer.

7. Special Access Service (Cont'd)

7.2 Rate Regulations (Cont'd)

7.2.2 Types of Rates and Charges (Cont'd)

(C) Nonrecurring Charges (Cont'd)

(3) Service Rearrangements (Cont'd)

(a) Administrative changes will be made without charge(s) to the customer. Administrative changes are as follows:

- Change of customer name,
- Change of customer or customer's end user premises address when the change of address is not a result of a physical relocation of equipment,
- Change in billing data (name, address, or contact name or telephone number),
- Change of agency authorization,
- Change of customer circuit identification,
- Change of billing account number,
- Change of customer test line number,
- Change of customer or customer's end user contact name or telephone number, and
- Change of jurisdiction.

(b) All other service rearrangements will be charged for as follows:

- If the change involves the addition of other customer designated premises to an existing multipoint service, the nonrecurring charge for the channel termination rate element will apply. The charge(s) will apply only for the location(s) that is being added.

7. Special Access Service (Cont'd)

7.2 Rate Regulations (Cont'd)

7.2.2 Types of Rates and Charges (Cont'd)

(C) Nonrecurring Charges (Cont'd)

(3) Service Rearrangements (Cont'd)

(b) (Cont'd)

- If the change involves the addition of an optional feature or function which has a separate nonrecurring charge, that nonrecurring charge will apply.

- If the change involves changing the type of signaling on a Voice Grade service, a charge equal to the Voice Grade channel termination rate element nonrecurring charge will apply. The charge will apply per service termination affected.

- If the change involves the rearrangement of existing Voice Grade Service to a Multiplexed High Capacity service and there is no change of customer premises location(s), a charge equal to one-half the Voice Grade channel termination rate element nonrecurring charge will apply. The charge will be per service termination affected.

- Except for moves stated in 7.2.3 following, all other changes, including the addition of optional feature or function without a separate nonrecurring charge, a charge equal to a channel termination nonrecurring charge will apply. Only one such charge will apply per service, per change.

- If a Special Access change involves changing a Multiplexer Cross Connect it will be considered to be a discontinuance and installation of the Multiplexer Cross Connect and all applicable nonrecurring charges shall apply. (N) | (N)

7. Special Access Service (Cont'd)

7.2 Rate Regulations (Cont'd)

7.2.2 Types of Rates and Charges (Cont'd)

(C) Nonrecurring Charges (Cont'd)

(3) Service Rearrangements (Cont'd)

(c) DS1/DS3 Rollover Charges

Rollover Charges are physical changes to, or reclassification of existing service, where there is no change in either point of termination or the Expanded Interconnection Service (EIS) point of termination. Except as noted below, all facilities and equipment required for the activity must already exist. The following are examples where DS1/DS3 Rollover Charges will apply:

- Rearranging an existing Special Access DS1 or DS3 service from one port to another port in the same multiplexer.

- Rearranging an existing Special Access DS1 or DS3 service from one multiplexer to another multiplexer in the same serving wire center.

- Rearranging an exiting Special Access DS1 or DS3 Channel Termination to a port of an existing multiplexed higher speed service in the same serving wire center.

- Rearranging an existing Special Access DS1 or DS3 Channel Termination to an EIS DS1 or DS3 Channel Termination in the same serving wire center.

- Rearranging an existing lower speed service to an existing multiplexed higher speed service.

In the event a change involves a physical move of the point of termination at the customer's premises or a move of the customer's premises, a move charge as set forth in 7.2.3 will apply.

Rollover Charges are set forth in 7.11.5(D) following. No charge will apply for subtending services of the service being rolled over as long as there is no change to the subtending services.

7. Special Access Service (Cont'd)

7.2 Rate Regulations (Cont'd)

7.2.3 Moves

A move involves a change in the physical location of one of the following:

- The Point of Termination at the customer's premises
- The customer's premises

The charges for the move are dependent on whether the move is to a new location within the same building or to a different building.

(A) Moves Within the Same Building

When the move is to a new location within the same building or a change of connecting facility assignment in the same central office other than DS1 and DS3 rollover rearrangements as described in 7.2.2(C)(3)(c) preceding, the charge for the move will be an amount equal to one half of the nonrecurring (i.e., installation) charge for the service termination affected. There will be no change in the minimum period requirements.

(B) Moves To a Different Building

Moves to a different building will be treated as a discontinuance and start of service and all associated nonrecurring charges will apply. New minimum period requirements will be established for the new services. The customer will also remain responsible for satisfying all outstanding minimum period charges for the discontinued service.

7.2.4 Minimum Periods

The minimum service period for all services is one month, except DS3 High Capacity Service under a 1, 3 or 5 year billing period, and part-time Video and Program Audio services.

(A) The minimum service period for part-time Video and Program Audio services is one day (i.e., a continuous 24-hour period, not limited to a calendar day). (T)

(B) The minimum service period for DS3 (44.746 Mpbs) High Capacity Special Access Service is a 1 year term plan. After the 1-, 3-, or 5-year billing period is satisfied, the customer must select a renewal option as referenced in Section 7.11.5.1. (N) (N)

(This page filed under Transmittal No. 55)

7. Special Access Service (Cont'd)

7.2 Rate Regulations (Cont'd)

7.2.5 Mileage Measurement

The mileage to be used to determine the monthly rate for the Channel Mileage Facility is calculated on the airline distance between the locations involved, i.e., the serving wire centers associated with two customer designated premises, a serving wirecenter associated with a customer designated premises and a Telephone Company hub, two Telephone Company hubs or between the serving wire center associated with a customer designated premises and a WATS Serving Office. The serving wire center associated with a customer designated premises is the serving wire center from which this customer designated premises would normally obtain dial tone.

Mileage charges are shown with each channel type. To determine the rate to be billed, first compute the mileage using the V&H coordinates method, as set forth in the NATIONAL EXCHANGE CARRIER ASSOCIATION TARIFF F.C.C. NO. 4, then multiply the resulting number of miles times the Channel Mileage Facility per mile rate, and add the Channel Mileage Termination rate for each termination. When the calculation results in a fraction of a mile, always round up to the next whole mile before determining the mileage and applying the rates. (T)

When hubs are involved, mileage is computed and rates applied separately for each section of the Channel Mileage, i.e., customer designated premises serving wire center to hub, hub to hub and/or hub to customer designated premises serving wire center. However, when any service is routed through a hub for purposes other than customer specified bridging or multiplexing (e.g., the Telephone Company chooses to so route for test access purposes), rates will be applied only to the distance calculated between the serving wire centers associated with the customer designated premises.

7. Special Access Service (Cont'd)

7.2 Rate Regulations (Cont'd)

7.2.6 Facility Hubs

A customer has the option of ordering Voice Grade service or High Capacity services (i.e., DS1, DS1C, DS2, DS3 or DS4) to a facility hub for channelizing to individual services requiring lower capacity facilities (e.g., Voice, Program Audio, etc.).

Different locations may be designated as hubs for different facility capacities, e.g., multiplexing from digital to digital may occur at one location while multiplexing from digital to analog may occur at a different location. When placing an Access Order the customer will specify the desired hub. EXCHANGE CARRIER ASSOCIATION TARIFF F.C.C. NO. 4 identifies serving wire centers, hub locations and the type of multiplexing functions available.

Some of the types of multiplexing available include the following:

- from higher to lower bit rate
- from higher to lower bandwidth
- from digital to voice frequency channels

Point to point services may be provided on channels of these services to a hub. The transmission performance for the point to point service provided between customer designated premises will be that of the lower capacity or bit rate. For example, when a 1.544 Mbps channel is multiplexed to voice frequency channels, the transmission performance of the channelized services will be Voice Grade, not High Capacity.

7. Special Access Service (Cont'd)

7.2 Rate Regulations (Cont'd)

7.2.6 Facility Hubs (Cont'd)

The Telephone Company will commence billing the monthly rate for the service to the hub on the date specified by the customer on the Access Order. Individual channels utilizing these services may be installed coincident with the installation of the service to the hub or may be ordered and/or installed at a later date, at the option of the customer. The customer will be billed for a Voice Grade or a High Capacity Channel Termination, Channel Mileage (when applicable), and the multiplexer at the time the service is installed. Individual service rates (by service type) will apply for a Channel Termination and additional Channel Mileage (as required) for each channelized service. These will be billed to the customer as each individual service is installed.

Cascading multiplexing occurs when a High Capacity service is de-multiplexed to provide channels with a lesser capacity and one of the lesser capacity channels is further de-multiplexed. For example, a 6.312 Mbps High Capacity service is de-multiplexed to four DS1 channels and then one of the DS1 channels is further de-multiplexed to 24 individual Voice Grade channels.

When cascading multiplexing is performed, whether in the same or a different hub, a charge for the additional multiplexing unit also applies. When cascading multiplexing is performed at different hubbing locations, Channel Mileage charges also apply between the hubs.

7. Special Access Service (Cont'd)

7.2 Rate Regulations (Cont'd)

7.2.6 Facility Hubs (Cont'd)

The Telephone Company will designate hubs for Video and Program Audio Services. Full-time or part-time service may be provided between customer designated premises or between a customer designated premises and a hub and billed accordingly at the monthly rates set forth in 7.8 and 7.9 following for a Channel Termination, Channel Mileage and Optional Features and Functions, as applicable. When the service is ordered to a hub, the customer may order a full-time or part-time Video and Program Audio services as needed between that hub and additional customer designated premises. The rate elements required to provide the part-time service (i.e., Channel Termination, Channel Mileage and Optional Features and Functions, as applicable) will be billed at daily rates for the duration of the service requested.

7.2.7 Shared Use Analog and Digital High Capacity Services

Shared use refers to a rate application applicable only when the customer orders High Capacity facilities between a customer designated premises and a Telephone Company hub where the Telephone Company performs multiplexing/demultiplexing functions and the same customer then orders the derived channels as Special and Switched Access Services.

The High Capacity facility will be ordered, provided and rated as Special Access Service (i.e., Channel Termination, Channel Mileage, as appropriate, and Multiplexing Arrangement). The nonrecurring charge that applies when the shared use facility is installed will be the nonrecurring charge associated with the appropriate Special Access High Capacity Channel Termination. Rating as Special Access will continue until such time as the customer chooses to use a portion of the available capacity for Switched Access Service. Individual service (i.e., Switched or Special Access) nonrecurring charges will not apply to the individual channels of the shared use facility.

Shared use is permitted with Expanded Interconnection Service described in Section 18.1.2 following.

7. Special Access Service (Cont'd)

7.2 Rate Regulations (Cont'd)

7.2.7 Shared Use Analog and Digital High Capacity Services (Cont'd)

When Special Access Service is provided utilizing a channel of the shared use facility to a hub, High Capacity rates and charges will apply for the facility to the hub, as set forth preceding, and individual service rates and charges will apply from the hub to the customer designated premises. The rates and charges that will apply to the portion from the hub to the customer designated premises will be dependent on the specific type of Special Access Service that is provided (e.g., Voice Grade, Telegraph, etc.). The applicable rates and charges will include a Channel Termination and Channel Mileage, if applicable. Rates and charges for optional features and functions associated with the service, if any, will apply for the appropriate channel type.

As each individual channel is activated for Switched Access Service, the High Capacity Special Access Channel Termination and Channel Mileage rates will be reduced accordingly (e.g., 1/24th for a DS1service, 1/672nd for DS-3 service, etc.). In addition, if multiplexing is associated with the service under optional features and functions, the multiplexor rate will also be reduced accordingly. Switched Access Service rates and charges, as set forth in 6.8 preceding, will apply for each channel of the shared use facility that is used to provide a Switched Access Service.

The customer must place an order for each individual Switched or Special Access Service utilizing the Shared Use Facilities and specify the channel assignment for each such service.

7. Special Access Service (Cont'd)

7.2 Rate Regulations (Cont'd)

7.2.8 Extension of WATS Access Service

WATS Access Service is available with extensions, i.e., additional terminations, of the service at different customer designated premises in the same or different LATAs. Extensions are provided and charged for as separate Voice Grade Special Access Service. The rate elements which apply are: WATS Access Line Channel Termination, Channel Mileage, if applicable, and Signaling Capability (Optional Features and Functions), if applicable. All appropriate charges as set forth in 7.7.6 following will apply.

7. Special Access Service (Cont'd)

7.3 Surcharge for Special Access Service

7.3.1 General

Special access services provided under this tariff may be subject to the monthly Special Access Surcharge. (T)

7.3.2 Application

(A) The Special Access Surcharge will apply to each interstate Special Access Service that terminates on an end user's PBX or other device where, through a function of the device, the Special Access Service interconnects to the local exchange network. Interconnection functions include, but are not limited to, wiring and software functions, bridging, switching or patching of calls or stations. The Surcharge will apply irrespective of whether the interconnection function is performed in equipment located at the customer's premises or in a Centrex Co-type switch.

(B) Special Access Service will be exempted from the Surcharge by the Telephone Company upon receipt of the customer's written certification for the following Special Access Service terminations:

(1) an open-end termination in a Telephone Company switch of an FX line, including CCSA and CCSA-equivalent ONALs; or

(2) an analog channel termination that is used for radio or television program transmission; or

(3) a termination used for TELEX service; or

(4) a termination that by the nature of its operating characteristics could not make use of Telephone Company common lines such as, terminations which are restricted through hardware or software; or

(This page filed under Transmittal No. 4)

7. Special Access Service (Cont'd)

7.3 Surcharge for Special Access Service (Cont'd)

7.3.2 Application (Cont'd)

(B) (Cont'd)

(5) a termination that interconnects either directly or indirectly to the local exchange network where the usage is subject to Carrier Common Line charges such as, where the Special Access Service accesses only FGA and no local exchange lines, or Special Access Service between customer points of termination, or Special Access Service connecting CCSA or CCSA-type equipment (inter-machine trunks); or

(6) a termination that the customer certifies to the Telephone Company is not connected to a PBX or other device which interconnects the Special Access Service to a local exchange subscriber line.

7.3.3 Exemption of Special Access Service

(A) Special Access Services which are terminated as set forth in 7.3.2(B) preceding will be exempted from the Special Access Surcharge if the customer provides the Telephone Company with written exemption certification. The certification may be provided to the Telephone Company (1) at the time the Special Access Service is ordered or installed; (2) at such time as the service is reterminated to a device which does not interconnect to the service to local exchange facilities, or (3) at such time as the service becomes associated with a Switched Access Service that is subject to Carrier Common Line Charges.

7. Special Access Service (Cont'd)

7.3 Surcharge for Special Access Service (Cont'd)

7.3.3 Exemption of Special Access Service (Cont'd)

(B) The exemption certification is to be provided by the customer ordering the service. The certification must be signed by the customer or authorized representative and include the category of exemption, as set forth in 7.3.2(B) preceding, for each termination, and the date which the exemption is effective.

(C) The customer shall also notify the Telephone Company when an exempted Special Access Service is changed or reterminated such that the exemption is no longer applicable.

(D) The Telephone Company will work cooperatively with the customer to resolve any questions regarding the exemption certification. In addition, the Telephone Company may withhold exemption of the service until the questions are resolved.

7.3.4 Rate Regulations

(A) The Surcharge will apply as set forth in 7.3.2(A) preceding, except that a surcharge will be assessed on a per voice grade equivalent basis for Special Access Services derived from High Capacity Special Access Services as shown in the following example:

Special Access Service	Voice Grade Equivalent		Surcharge		Monthly Charge
DS1	24	X	$25.00	=	$600.00

In the case of multipoint Special Access Services, one Special Access Surcharge will apply for each termination of a Special Access Channel at an end user's premises.

(This page filed under Transmittal No. 1)

7. Special Access Service (Cont'd)

7.3 Surcharge for Special Access Service (Cont'd)

7.3.4 Rate Regulations (Cont'd)

(B) The Telephone Company will bill the appropriate Special Access Surcharge to the ordering customer for each interstate Special Access Service installed unless exemption certification is provided as set forth in 7.3.3 preceding.

(C) If a written certification is not received at the time the Special Access Service is obtained, the Surcharge will be applied. Exempt status will become effective on the certification date indicated by the customer, subject to the regulations set forth in (D) following.

(D) Crediting the Surcharge

The Telephone Company will cease billing the Special Access Surcharge when certification, as set forth in 7.3.3 preceding, is received. If the status of the Special Access Service was changed prior to receipt of the exemption certification, the Telephone Company will credit the customer's account, not to exceed ninety (90) days, based on the effective date of the change as specified by the customer in the letter of certification.

(E) Surcharge Payment Deferral Provision

The Telephone Company will bill the surcharge on Special Access facilities in service as of June 1, 1986, used in the provision of WATS or WATS-type service through a Telephone Company designated WATS Serving Office (WSO). Payment of such surcharge may be deferred, without penalty, for up to ninety (90) days from the date of the first bill rendered for the Special Access Surcharge.

7. Special Access Service (Cont'd)

7.3 Surcharge for Special Access Service (Cont'd)

7.3.4 Rate Regulations (Cont'd)

(E) Surcharge Payment Deferral Provision (Cont'd)

If appropriate exemption certification is not received by the Telephone Company by the end of the ninety (90) days deferral period, the billed Special Access Surcharge will become due. These charges, if unpaid, will be subject to a late payment charge as set forth in Section 2.4.1(B)(2) preceding.

7.3.5 Rate

	USOC	Monthly Rate
Surcharge for Special Access Service - Per Voice Grade Equivalent	S25	$25.00

7. Special Access Service (Cont'd)

7.4 Message Station Equipment Recovery Charge

7.4.1 General

The Message Station Equipment Recovery Charge is a charge to recover that portion of message station equipment that is assigned to Special Access Service. (T)

Pursuant to CC Docket 83-1145 Memorandum Opinion and Order adopted by the Federal Communications Commission on November 8, 1984, and released on November 9, 1984, this charge is assessed only to those customers to which the Special Access Surcharge, as set forth in 7.3 preceding, applies.

7.4.2 Rate

	USOC	Monthly Rate
Message Station Equipment Recovery Charge - Per Special Access Surcharge Assessed	UTM	$0.00

7. Special Access Service (Cont'd)

7.5 Reserved for Future Use

(This page filed under Transmittal No. 1)

7. Special Access Service (Cont'd)

7.6 Digital Data Over Voice

7.6.1 Basic Channel Description

A Digital Data Over Voice (DDOV) service allows the simultaneous transmission of either synchronous or asynchronous data at the speed of 9.6 kbps. A DDOV Channel Termination is provided as a derived channel of a customer's existing local exchange voice grade service local loop facility. The customer may transmit data over the DDOV service simultaneously with a voice transmission. The customer must provide a compatible data voice multiplexer at the designated customer premises.

DDOV is provided where suitable local loop facilities are available subject to the transmission limitations of the facilities and equipment used by the Telephone Company.

The end user must have a single party, analog voice band, local exchange telephone line in service at the time the order of the DDOV is placed.

DDOV must be ordered in conjunction with High Capacity Multiplexing, DS1 to Voice/Digital as set forth in 7.11.4(B)(5) following.

7.6.2 Technical Specifications Packages

The technical specifications for DDOV service and the customer-provided data voice multiplexer are delineated in the appropriate Technical Reference for DDOV service listed in Section 7.1.2(F).

7.6.3 Channel Interfaces

Compatible channel interfaces are set forth in the appropriate Technical Reference for DDOV service listed in Section 7.1.2(F).

7.6.4 Optional Features and Functions

There are no optional features and functions available with DDOV service.

7. Special Access Service (Cont'd)

7.6 Digital Data Over Voice (Cont'd)

7.6.5 Rates and Charges

(A) Channel Termination	USOC	Monthly Rate	Nonrecurring Rate
- Per Termination			
- 9.6 kbps	T6OVS	$38.00	$482.53

(B) Channel Mileage

Channel Mileage will be charged at the corresponding channel mileage rates for Digital Data Service in Section 7.10.5(B)following.

(This page filed under Transmittal No. 1)

7. Special Access Service (Cont'd)

7.7 Voice Grade Service

7.7.1 Basic Channel Description

A Voice Grade channel is a channel which provides voice frequency transmission capability in the nominal frequency range of 300 to 3000 Hz and may be terminated two-wire or four-wire. Voice Grade channels are provided between customer designated premises, between a customer designated premises and a Telephone Company hub or hubs, or between a customer designated premises and a WATS Serving Office (WSO).

7.7.2 Technical Specifications Packages

	Package VG-												
Parameter	C*	1	2	3	4	5	6	7	8	9	10	11	W
Attentuation Distortion	X	X	X	X	X	X	X	X	X	X	X	X	X
C-Message Noise	X	X	X	X	X	X	X	X	X	X	X	X	X
Echo Control	X	X	X	X		X		X	X			X	X
Envelope Delay Distortion	X						X	X	X	X	X	X	X
Frequency Shift	X						X	X	X	X	X	X	X
Impulse Noise	X					X	X	X	X	X	X	X	X
Intermodulation Distortion	X						X	X	X	X	X	X	X
Loss Deviation	X	X	X	X	X	X	X	X	X	X	X	X	X
Phase Hits, Gain Hits, and Dropouts	X												
Phase Jitter	X						X	X	X	X	X	X	X
Signal-to-C Message Noise					X								
Signal-to-C Notch Noise	X					X	X	X	X	X	X	X	X

* The desired parameters are selected by the customer from the list of available parameters.

(This page filed under Transmittal No. 1)

7. Special Access Service (Cont'd)

7.7 Voice Grade Service (Cont'd)

7.7.2 Technical Specifications Packages (Cont'd)

The technical specifications for these parameters (except for dropouts, gain hits, and phase hits) are delineated in Technical Reference TR-NPL-000334, TR-NPL-000335 and associated Addendum. The technical specifications for dropouts, phase hits, and gain hits are delineated in Technical Reference PUB 41004, Table 4.

7.7.3 Channel Interfaces

The following channel interfaces for Voice Grade service do not require signaling capability: AH, DA, DB, DD, DE, DM, DS, NO, PR and TF.

The following channel interfaces for Voice Grade service require signaling capability: AB, AC, CT, DX, DY, EA, EB, EC, EX, GO, GS, LA, LB, LC, LO, LR, LS, RV and SF.

Compatible channel interfaces are set forth in 15.3 following.

7.7.4 Optional Features and Functions

(A) Central Office Bridging Capability

(1) Voice Bridging (two-wire and four-wire)

(2) Data Bridging (two-wire and four-wire)

7. Special Access Service (Cont'd)

7.7 Voice Grade Service (Cont'd)

7.7.4 Optional Features and Functions (Cont'd)

(B) Conditioning

Conditioning provides more specific transmission characteristics for Voice Grade services. C-Type conditioning controls attenuation distortion and envelope delay distortion. Sealing Current helps maintain continuity on dry metallic loops.

For two-point services, the parameters apply to each service. For multipoint services, the parameters apply to each mid-link or end link. C-Type conditioning and Data Capability may be combined on the same service.

In addition, a customer may desire that either the attenuation distortion or the envelope delay distortion, or both, be improved to more stringent specifications than those provided for standard C-Type conditioning. In such cases the customer has the option of ordering either Improved Attenuation Distortion or Improved Envelope Delay Distortion, or both, as desired.

(1) C-Type Conditioning

C-Type Conditioning is provided for the additional control of attenuation distortion and envelope delay distortion on data services. The attenuation distortion and envelope delay distortion specifications for C-Type Conditioning are delineated in Technical Reference TR-NPL-000335.

7. Special Access Service (Cont'd)

7.7 Voice Grade Service (Cont'd)

7.7.4 Optional Features and Functions (Cont'd)

(B) Conditioning (Cont'd)

(2) Improved Attenuation Distortion *

Improved Attenuation Distortion upgrades the frequency versus loss limits of the channel. The technical specifications for Improved Attenuation Distortion are delineated in Technical Reference TR-NPL-000335.

(3) Improved Envelope Delay Distortion *

Improved Envelope Delay Distortion upgrades the frequency versus delay response limits of the channel. The technical specifications for Improved Envelope Delay Distortion are delineated in Technical Reference TR-NPL-000335.

* Improved Attenuation Distortion and Improved Envelope Delay Distortion will continue to be provided to all customers who were provided with either or both of these optional features in conjunction with C-Type Conditioning prior to September 29, 1988.

(This page filed under Transmittal No. 1)

7. Special Access Service (Cont'd)

7.7 Voice Grade Service (Cont'd)

7.7.4 Optional Features and Functions (Cont'd)

(B) Conditioning (Cont'd)

(4) Sealing Current Conditioning

Sealing Current Conditioning is provided to help maintain continuity on dry loops. It is usually associated with four-wire DA or NO type channel interfaces.

(C) Customer Specified Premises Receive Level

This option allows the customer to specify the receive level at the Point of Termination. The level must be within a specific range on effective four-wire transmission. The ranges are delineated in Technical Reference TR-NPL-000335.

(D) Improved Return Loss

(1) On Effective Four-Wire Transmission at Four-Wire Point of Termination (applicable to each two-wire port): Provides for a fixed 600 ohm impedance, variable level range and simplex reversal. Telephone Company equipment is required at the customer's premises where this option is ordered. The Improved Return Loss parameters are delineated in Technical Reference TR-NPL-000335.

(2) On Effective Two-Wire Transmission at Two-Wire Point of Termination: Provides for more stringent Echo Control specifications. In order for this option to be applicable, the transmission path must be four-wire at one POT and two-wire at the other POT. Placement of Telephone Company equipment may be required at the customer’s premises with the two-wire POT. The Improved Return Loss parameters are delineated in Technical Reference TR-NPL-000335.

7. Special Access Service (Cont'd)

7.7 Voice Grade Service (Cont'd)

7.7.4 Optional Features and Functions (Cont'd)

(E) Data Capability (D Conditioning)

Data Capability provides transmission characteristics suitable for data communications. Specifically, Data Capability provides for the control of Signal to C-Notched Noise Ratio and intermodulation distortion. It is available for two-point services or three-point multipoint services.

The Signal to C-Notched Noise Ratio and intermodulation distortion parameter for Data Capability are:

- Signal to C-Notched Noise Ratio is equal to or greater than 32dB
- Intermodulation distortion:
- Signal to second order modulation products (R2) is equal to or greater than 38dB.
- Signal to third order modulation products (R3) is equal to or greater than 42 dB

When a service equipped with Data Capability is used for voice communications, the quality of the voice transmission may not be satisfactory.

(F) Telephoto Capability

Telephoto Capability provides transmission characteristics suitable for telephotographic communications. Specifically, Telephoto Capability is provided for the control of attenuation distortion and envelope delay distortion on telephotographic services. The attenuation distortion and envelope delay distortion parameters for Telephoto Capability are:

7. Special Access Service (Cont'd)

7.7 Voice Grade Service (Cont'd)

7.7.4 Optional Features and Functions (Cont'd)

(F) Telephoto Capability (Cont'd)

Attenuation Distortion (1004Hz Reference)		Envelope Delay Distortion	
Frequency Range (Hz)	Variation (dB)	Frequency Range (Hz)	Variation (mcs)
500-3000	-0.5 to +1.5	1000-2600	110
300-3200	-1.0 to +2.5	800-2800	180

(G) Signaling Capability

Signaling Capability provides for the ability to transmit signals from one customer premises to another customer premises on the same service.

(H) Public Packet Switching Network (PPSN) Interface Arrangement

An arrangement that provides the interface requirements that permit a Voice Grade service to interface with a Public Packet Switching Network packet switch located in a Telephone Company premises. The interface is compatible with X.25 and X.75 packet switching protocols as defined by the CCITT.

(This page filed under Transmittal No. 1)

7. Special Access Service (Cont'd)

7.7 Voice Grade Service (Cont'd)

7.7.4 Optional Features and Functions (Cont'd)

(I) Four-Wire/Two-Wire Conversions

When a customer requests that an effective four-wire channel be terminated with a two-wire channel interface at the customer designated premises, a four-wire to two-wire conversion is required. The rate for the conversion is included as part of the basic Channel Termination rate.

(J) Improved Two-Wire Voice Transmission

(1) Loss Deviation

The maximum Loss Deviation of the 1004 HZ loss relative to the Expected measured Loss (EML) is -4.0 dB to +4.0 dB.

(2) Attenuation Distortion

The maximum Attenuation Distortion in the 404 to 280 Hz frequency band relative to loss at 1004 Hz is -2.0 dB to +6.0 dB.

(3) C-Message Noise

The maximum C-Message Noise for the transmission path at the route miles listed is less than:

Route Miles	C-Message Noise
less than 50	35 dBrnco
51 to 100	37 dBrnco
101 to 200	40 dBrnco
201 to 400	43 dBrnco
401 to 1000	45 dBrnco

7. Special Access Service (Cont'd)

7.7 Voice Grade Service (Cont'd)

7.7.4 Optional Features and Functions (Cont'd)

(J) Improved Two-Wire Voice Transmission (Cont'd)

(4) Return Loss

The Return Loss, expressed as Echo Return Loss (ERL) and Singing Return Loss (SRL), is equal to or greater than:

ERL	13.0 dB
SRL	6.0 dB

The rate for the provision of Improved Two-Wire Voice Transmission is included as part of the basic Channel Termination rate.

7. Special Access Service (Cont'd)

7.7 Voice Grade Service (Cont'd)

7.7.4 Optional Features and Functions (Cont'd)

The following table shows the technical specifications packages with which the optional features and functions are available.

	Available with Technical Specifications Package VG-												
	C	1	2	3	4	5	6	7	8	9	10	11	W
C-Type Conditioning	X					X	X	X	X	X	X		
Central Office Bridging Capability	X		X			X	X				X	X	
Customer Specified Premises Receive Level	X		X	X				X	X	X			
Data Capability	X						X	X			X		
Improved Return Loss For Effective Four-Wire Transmission	X	X	X	X	X	X	X	X	X	X	X	X	
For Effective Two-Wire Transmission	X		X	X				X					
Improved Two-Wire Voice Transmission													X
PPSN Interface Arrangement	X									X			
Sealing Current Conditioning	X						X						
Signaling Capability	X	X	X	X				X	X	X			
Telephoto Capability	X											X	

(This page filed under Transmittal No. 1)

7. Special Access Service (Cont'd)

7.7 Voice Grade Service (Cont'd)

7.7.5 WATS Access Line (WAL) Service

(A) Basic Channel Description

A WATS Access Line service provides a service for voice frequency transmission capability. The service provides a connection between a customer designated premises and a WATS serving office associated with the closed end of 800 Service or WATS. Originating access is provided with Feature Group C or D Switched Access Service as set forth in Section 6 preceding. Terminating access is provided with Feature Group A, B, C, or D as set forth in Section 6 preceding.

WAL Service can be arranged for screening, blocking and directionality at the option of the customer and where available. It is provided with either rotary dial or dual tone multifrequency address signaling and either loop start, ground start, E&M, or reverse battery supervisory signaling. The choice of the type of signaling is at the option of the customer and subject to the technical limitations identified in the Technical Reference TR-NPL-000334. WATS Access Line Service is provided as an effective two-wire, or an effective four-wire transmission path.

WAL Service is provided for interstate communications only. All originating intrastate intraLATA calls will be blocked.

7. Special Access Service (Cont'd)

7.7 Voice Grade Service (Cont'd)

7.7.5 WATS Access Line (WAL) Service (Cont'd)

(A) Basic Channel Description (Cont'd)

The following diagram depicts a WATS Access Line service.

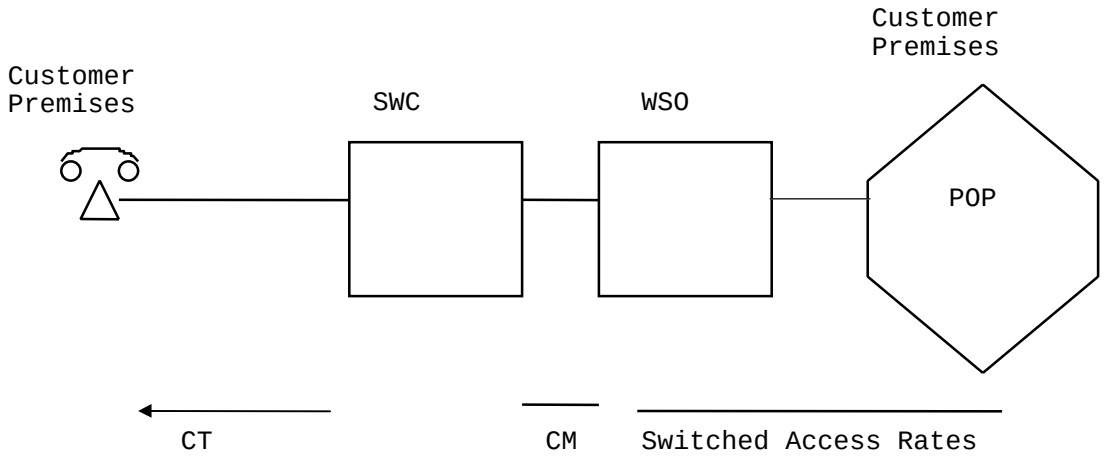

CT - Channel Termination
CM - Channel Mileage
SWC - Serving Wire Center
WSO - WATS Serving Office
POP - Point of Presence

Applicable Rate elements are:

CT - Channel Termination (1 applicable)
CM - Channel Mileage
- Optional Features and Functions when ordered (per channel termination).

(B) Technical Specifications

Technical specifications and examples of application are delineated in Technical Reference TR-NPL-000334.

(C) Channel Interfaces

Compatible channel interfaces are set forth in Technical Reference TR-NPL-OOO334.

(This page filed under Transmittal No. 1)

7. Special Access Service (Cont'd)

7.7 Voice Grade Service (Cont'd)

7.7.5 WATS Access Line (WAL) Service (Cont'd)

(D) Optional Features and Functions

(1) Improved two-wire voice transmission specifications

(2) Certain other options associated with WAL services are as either Line Termination or Common Switching optional features as defined in Section 6 preceding.

(3) WATS Access Lines use the same Features and Functions as Voice Grade Service.

The following table shows the services with which the Optional Features and Functions are available.

	Available with Technical Specifications Package WALS-					
	EA	EB	ED	EG	FA	FJ
Effective 2-Wire	X				X	X
Effective 4-Wire		X		X		
Improved 2-Wire Voice Transmission				X	X	
Improved Return Loss 2-Wire						X
Digital DS1			X			
Bridging Capability	X	X		X	X	X

(This page filed under Transmittal No. 1)

ACCESS SERVICE

7. Special Access Service (Cont'd)

7.7 Voice Grade Service (Cont'd)

7.7.6 Rates and Charges

	USOC	Monthly Rate	Non-Recurring Charge
(A) Channel Termination			
- Per Termination			
- Two-Wire	T6E2X	$21.00(I)	$200.00
- Four-Wire	T6E4X	$21.00(I)	$200.00
- WATS Access Line			
- Per point of termination			
- Two-Wire with screening and blocking	X2W	$21.00(I)	$200.00
- Four-Wire with screening and blocking	X4W	$21.00(I)	$200.00

(B) Channel Mileage

	USOC	Monthly Rate
(1) Channel Mileage Facility - Per Mile	1L5XX/CMF	$0.44(R)
(2) Channel Mileage Termination - Per Termination	1L5XX/CMT	$8.90

Rates contained in this transmittal are subject to subsequent adjustment, effective retrospectively, in the event the Commission or a court subsequently authorizes Nevada to correct its rates pursuant to pending motions, or petitions for reconsideration or waiver, or in the event of any other adjustment to an order of the Commission or a court.

(This page filed under Transmittal No. 67)

7. Special Access Service (Cont'd)

7.7 Voice Grade Service (Cont'd)

7.7.6 Rates and Charges (Cont'd)

(C) Optional Features and Functions

(1) Bridging

(a) Voice Bridging

	USOC	Monthly Rate
Two-Wire/Four Wire		
- Per port		
- Two-Wire	BCNV2	$2.72
- Four-Wire	BCNV4	$3.42

(b) Data Bridging

Two-Wire/Four-Wire		
- Per Port		
- Two-Wire	BCND2	$2.72
- Four-Wire	BCND4	$3.42

7. Special Access Service (Cont'd)

7.7 Voice Grade Service (Cont'd)

7.7.6 Rates and Charges (Cont'd)

(C) Optional Features and Functions (Cont'd)

	USOC	Monthly Rate	Non-recurring Charges	(T)
(2) Conditioning				
- Per Termination				
- C-Type	X1CPT	$ 3.79	None	
- Improved Attenuation Distortion*	UHW	5.37	$180.80	
- Improved Envelope Delay Distortion*	UHY	26.83	287.06	(T)
- Sealing Current	1HBPT	6.97	None	

* Improved Attenuation Distortion and Improved Envelope Delay Distortion will continue to be provided to all customers who were provided with either or both of these optional features in conjunction with C-Type Conditioning prior to September 29, 1988. (T)

(This page filed under Transmittal No. 4)

ACCESS SERVICE

7. Special Access Service (Cont'd)

7.7 Voice Grade Service (Cont'd)

7.7.6 Rates and Charges (Cont'd)

(C) Optional Features and Functions (Cont'd)

	USOC	Monthly Rate	Non recurring Charges
(3) Improved Return Loss for Effective Two-Wire or Four-Wire Transmission			
- Per termination			
- Two-Wire	1RL2W	$ 8.24	None
- Four-Wire	1RL4W	8.20	None
(4) Customer Specified Received Level -Per two-wire termination	RLS	4.61	None
(5) Data Capability - Per termination	XDCPT	5.67	$ 91.27
(6) Telephoto Capability - Per termination	XTCPT	7.40	$377.67

(This page filed under Transmittal No. 1)

7. Special Access Service (Cont'd)

7.7 Voice Grade Service (Cont'd)

7.7.6 Rates and Charges (Cont'd)

(C) Optional Features and Functions (Cont'd)

	USOC	Monthly Rate
(7) Signaling Capability - Per termination	XSS++	$ 9.94

In lieu of ++, substitute appropriate two digit code from the following list to specify type of signaling.

AB
AC
CT
DX
DY
EA
EB
EC
EX
GO
GS
LA
LB
LC
LO
LR
LS
RV
SF

7. Special Access Service (Cont'd)

7.7 Voice Grade Service (Cont'd)

7.7.6 Rates and Charges (Cont'd)

(C) Optional Features and Functions (Cont'd)

	Monthly Rate
(8) Public Packet Switching Network (PPSN) Interface Arrangement - Per arrangement	ICB

(This page filed under Transmittal No. 1)

7. Special Access Service (Cont'd)

7.8 Program Audio Service

7.8.1 Basic Channel Description

A Program Audio channel is a channel with bandwidth measured in Hz for the transmission of a complex signal voltage. The actual bandwidth is a function of the channel interface selected by the customer. Only one-way transmission is provided. Program Audio channels are provided between customer designated premises or between a customer designated premises and a Telephone Company hub or hubs.

7.8.2 Technical Specifications Packages

		Package AP-			
Parameter	C*	1	2	3	4
Actual Measured Loss	X	X	X	X	X
Amplitude Tracking	X				
Crosstalk	X	X	X	X	X
Distortion Tracking	X				
Gain/Frequency Distortion	X	X	X	X	X
Group Delay	X				
Noise	X	X	X	X	X
Phase Tracking	X				
Short-Term Gain Stability	X				
Short-Term Loss	X				
Total Distortion	X	X	X	X	X

The technical specifications are delineated in Technical Reference TR-NPL-000337.

7.8.3 Channel Interfaces

The following channel interfaces (CIs) define the bandwidths that are available for a Program Audio channel:

* The desired parameters are selected by the customer from the list of available parameters.

(This page filed under Transmittal No. 1)

7. Special Access Service (Cont'd)

7.8 Program Audio Service (Cont'd)

7.8.3 Channel Interfaces (Cont'd)

CI	Bandwidth
PG-1	Nominal frequency from 50 to 15000 Hz
PG-3	Nominal frequency from 200 to 3500 Hz
PG-5	Nominal frequency from 100 to 5000 Hz
PG-8	Nominal frequency from 50 to 8000 Hz

Compatible channel interfaces are set forth in 15.3 following.

7.8.4 Optional Features and Functions

(A) Gain Conditioning

Control of 1004 Hz AML at initiation of service to 0dB ± 0.5 dB.

The following table shows the technical specifications packages with which the optional features and functions are available.

	Available with Technical Specifications Package AP-					
	C	1	2	3	4	
Gain Conditioning	X	X	X	X	X	(D)

7. Special Access Service (Cont'd)

7.8 Program Audio Service

7.8.5 Rates and Charges

	USOC	Monthly Rate	Daily* Rate	Nonrecurring Charge Monthly	Nonrecurring Charge Daily
(A) Channel Termination					
- Per Termination					
- 200 to 3500 Hz	T6ECS	$23.36	$3.28	$289.75	$289.75
- 100 to 5000 Hz	T6ECS	26.75(R)	3.51	289.75	289.75
- 50 to 8000 Hz	T6ECS	28.25(R)	3.80	289.75	289.75
- 50 to 15000 Hz	T6ECS	106.56	11.24	289.75	289.75

	USOC	Monthly Rate	Daily* Rate
(B) Channel Mileage			
(1) Channel Mileage Facility			
- Per Mile			
- 200 to 3500 Hz	1L5XX/CMF	$0.45	$0.05
- 100 to 5000 Hz	1L5XX/CMF	$0.90	$0.10
- 50 to 8000 Hz	1L5XX/CMF	$1.36	$0.15
- 50 to 15000 Hz	1L5XX/CMF	$2.73	$0.28
(2) Channel Mileage Termination			
- Per Termination			
- 200 to 3500 Hz	1L5XX/CMT	$ 9.33	$1.05
- 100 to 5000 Hz	1L5XX/CMT	$15.50	$1.49
- 50 to 8000 Hz	1L5XX/CMT	$18.97	$1.98
- 50 to 15000 Hz	1L5XX/CMT	$31.76	$3.34

* Daily rates will be topped and maximum rates derived as set forth in 7.2.2.(B) preceding.

Rates contained in this transmittal are subject to subsequent adjustment, effective retrospectively, in the event the Commission or a court subsequently authorizes Nevada to correct its rates pursuant to pending motions, or petitions for reconsideration or waiver, or in the event of any other adjustment to an order of the Commission or a court.

(This page filed under Transmittal No. 44)

7. Special Access Service (Cont'd)

7.8 Program Audio Service

7.8.5 Rates and Charges (Cont'd)

(C) Optional Features and Functions

	USOC	Monthly Rate	Daily* Rate	Nonrecurring Charge Monthly	Nonrecurring Charge Daily
(1) Gain Conditioning	XGC	$1.67	$.18	$73.25	$73.25

* Daily rates will be topped and maximum rates derived as set forth in 7.2.2.(B) preceding.

(This page filed under Transmittal No. 1)

7. Special Access Service (Cont'd)

7.9 Video Service

7.9.1 Basic Channel Description

A Video channel is a channel with one-way transmission capability for a standard 525 line/60 field monochrome, or National Television Systems Committee color, video signal and one or two associated 5 or 15 kHz audio signal(s). The associated audio signal(s) may be either diplexed or provided as one or two separate channels. The provision and the bandwidth of the associated audio signal(s) is a function of the channel interface selected by the customer. Video channels are provided between customer designated premises or between a customer designated premises and a Telephone Company hub or hubs.

7.9.2 Technical Specifications Packages

	Package TV-		
Parameter	C*	1	2
Amplitude/Frequency Response Characteristics	X	X	X
Audio-To-Video Time Differential	X	X	X
Chrominance/Luminance Inequalities			
Gain	X	X	X
Delay	X	X	X
Chrominance/Luminance Intermodulation	X	X	X
Chrominance Nonlinear Gain Distortion	X	X	X
Chrominance Nonlinear Phase Distortion	X	X	X
Crosstalk	X	X	X
Differential Gain	X	X	X
Differential Phase	X	X	X
Dynamic Gain (picture and sync signal)	X	X	X
Field-Time Distortion	X	X	X
Gain/Difference Between Channels	X	X	
Phase Difference Between Channels	X	X	
Insertion Gain	X	X	X
Line-Time Distortion	X	X	X

* The desired parameters are selected by the customer from the list of available parameters.

(This page filed under Transmittal No. 1)

7. Special Access Service (Cont'd)

7.9 Video Service (Cont'd)

7.9.2 Technical Specifications Packages (Cont'd)

Parameter (Cont'd)	Package TV-C*	1	2
Luminance Non-Linear Distortion	X	X	X
Maximum Steady-State Test Levels	X	X	X
Short-Time Distortion	X	X	X
Total Harmonic Distortion and Noise	X	X	X
Transient Sync Signal Non-Linearity	X	X	X

The technical specifications are delineated in Technical Reference TR-NPL-000338.

* The desired parameters are selected by the customer from the list of available parameters.

(This page filed under Transmittal No. 1)

7. Special Access Service (Cont'd)

7.9 Video Service (Cont'd)

7.9.3 Channel Interfaces

The following channel interfaces (CIs) define the bandwidth and the provision of the audio signal(s) associated with a Video Channel:

CI	Audio Bandwidth	Provision
2TV6-1	15kHz	1 Channel, diplexed
2TV6-2	15kHz	2 Channels, diplexed
2TV7-1	15kHz	1 Channel, diplexed
2TV7-2	15kHz	2 Channels, diplexed
4TV6-5	5kHz	1 Channel, separate
4TV6-15	15kHz	1 Channel, separate
4TV7-5	5kHz	1 Channel, separate
4TV7-15	15kHz	1 Channel, separate
6TV6-5	5kHz	2 Channels, separate
6TV6-15	15kHz	2 Channels, separate
6TV7-5	5kHz	2 Channels, separate
6TV7-15	15kHz	2 Channels, separate

Compatible channel interfaces are set forth in 15.3 following.

7. Special Access Service (Cont'd)

7.9 Video Service (Cont'd)

7.9.4 Rates and Charges

	USOC	Monthly Rate	Daily* Rate	Nonrecurring Charge Monthly	Nonrecurring Charge Daily
(A) Channel Termination					
- Per Termination					
- TV-1 or 2	TMEV1	$544.46	$299.45	$60.42	$60.42
- 4TV-5	TMEV4	$587.92	$323.35	$60.42	$60.42
- 6TV-5	TMEV6	$587.92	$323.35	$60.42	$60.42
- TV-15	TMEV5	$587.92	$323.35	$60.42	$60.42

(B) Channel Mileage	USOC	Monthly Rate	Daily Rate*
(1) Channel Mileage Facility			
- Per Mile			
- TV 1 or 2	1L5XX/CMF	$56.25	$30.82
- 4TV-5	1L5XX/CMF	$56.25	$30.82
- 6TV-5	1L5XX/CMF	$56.25	$30.82
- TV-15	1L5XX/CMF	$56.25	$30.82
(2) Channel Mileage Termination			
- Per Termination			
- TV-1 or 2	1L5XX/CMT	None	None
- 4TV-5	1L5XX/CMT	None	None
- 6TV-5	1L5XX/CMT	None	None
- TV-15	1L5XX/CMT	None	None

* Daily rates will be topped and maximum rates derived as set forth in 7.2.2.(B) preceding.

(This page filed under Transmittal No. 1)

7. Special Access Service (Cont'd)

7.10 Digital Data Service

7.10.1 Basic Channel Description

A Digital Data channel is a channel for duplex four-wire transmission of synchronous serial data at the rate of 2.4, 4.8, 9.6, 56 or 64 kbps.* The actual bit rate is a function of the channel interface selected by the customer. The channel provides a synchronous service with timing provided by the Telephone Company through the Telephone Company's facilities to the customer in the received bit stream. Digital Data channels are only available via Telephone Company designated hubs and are provided between customer designated premises or between a customer designated premises and a Telephone Company hub or hubs. Digital Data service may also be ordered in conjunction with High Capacity (DS-1) to Analog/Digital (DS-O) multiplexing as set forth in 7.11.4 (5) following, and not be required to route through a Digital Data Service Hub as set forth in Technical Reference Pub L-780077-PB/NB.

The customer will provide the Channel Service Unit-type equipment or other Network Channel Terminating Equipment associated with the Digital Data channel at the customer premises. The interim program for interconnection of such equipment is set forth in Technical Reference PUB AS No. 1.

* 64kbps Service is only available with High Capacity Multiplexing DS1 to Voice/Digital as set forth in 7.11.4 (B)(5) following. 64kpbs service is only available where technically feasible.

7. Special Access Service (Cont'd)

7.10 Digital Data Service (Cont'd)

7.10.2 Technical Specifications Packages

	Package D-			
Parameter	1	2	3	4
Error-Free Seconds	X	X	X	X

The Telephone Company will provide a channel capable of meeting a monthly average performance equal to or greater than 99.875% error-free seconds (if provided through a Digital Data hub) while the channel is in service, if it is measured through a CSU equivalent which is designed, manufactured, and maintained to conform with the specifications contained in Technical Reference PUB 62310.

Voltages which are compatible with Digital Data Service are delineated in Technical Reference TR-NPL-000341.

7. Special Access Service (Cont'd)

7.10 Digital Data Service (Cont'd)

7.10.3 Channel Interfaces

The following channel interfaces (CIs) define the bit rates that are available for a Digital Data channel:

CI	Bit Rate
DU-24	2.4 kbps
DU-48	4.8 kbps
DU-96	9.6 kbps
DU-56	56.0 kbps
DU-56A	64.0 kbps

Compatible channel interfaces are set forth in 15.3 following.

7.10.4 Optional Features and Functions

(A) Central Office Bridging Capability

The following table shows the technical specifications packages with which the optional features and functions are available.

	Available with Technical Specifications Package D-			
	1	2	3	4
Central Office Bridging Capability	X	X	X	X

7. Special Access Service (Cont'd)

7.10 Digital Data Service (Cont'd)

7.10.5 Rates and Charges

	USOC	Monthly Rate	Nonrecurring Rates
- Per termination			
- 2.4 kbps	T6ECS	$ 71.00(I)	$250.00
- 4.8 kbps	T6ECS	71.00(I)	250.00
- 9.6 kbps	T6ECS	71.00(I)	250.00
-56.0 kbps	T6ECS	71.00(I)	250.00
-64.0 kbps	T6ECS	71.00(I)	250.00

(B) Channel Mileage

	USOC	Monthly Rates
(1) Channel Mileage Facility		
- Per Mile		
- 2.4 kbps	1L5XX/CMF	$0.70
- 4.8 kbps	1L5XX/CMF	0.70
- 9.6 kbps	1L5XX/CMF	0.70
- 56 kbps	1L5XX/CMF	0.70
- 64 kbps	1L5XX/CMF	0.70
(2) Channel Mileage Termination		
- Per Termination		
- 2.4 kbps	1L5XX/CMT	$13.00
- 4.8 kbps	1L5XX/CMT	13.00
- 9.6 kbps	1L5XX/CMT	13.00
- 56 kbps	1L5XX/CMT	13.00
- 64 kbps	1L5XX/CMT	13.00

Rates contained in this transmittal are subject to subsequent adjustment, effective retrospectively, in the event the Commission or a court subsequently authorizes Nevada to correct its rates pursuant to pending motions, or petitions for reconsideration or waiver, or in the event of any other adjustment to an order of the Commission or a court.

(This page filed under Transmittal No. 67)

7. Special Access Service (Cont'd)

7.10 Digital Data Service (Cont'd)

7.10.5 Rates and Charges (Cont'd)

	USOC	Monthly Rate
(C) Optional Features and Functions		
(1) Bridging		
- Per port	BCNDA	$16.51

(This page filed under Transmittal No. 1)

7. Special Access Service (Cont'd)

7.11 High Capacity Service

7.11.1 Basic Channel Description

A High Capacity channel is a channel for the transmission of nominal 1.544, 3.152, 6.312, 44.736 (DS3), or 274.176 Mbps isochronous serial data. The actual bit rate and framing format is a function of the channel interface selected by the customer. DS3 will be provided with an electrical handoff at the customer premise at the request of the customer. High Capacity channels are provided between customer designated premises or between a customer designated premises and a Telephone Company hub or hubs. (T)

The customer will provide the Network Channel Terminating Equipment associated with the High Capacity channel at the customer's premises. The interim program for interconnection of such equipment is set forth in Technical Reference PUB AS No. 1.

DS3 High Capacity service offerings are only available where facilities and operating conditions permit. Where facilities and/or operating conditions do not permit, Special Construction as set forth in Pacific Bell Telephone Company's FCC No. 2 shall apply. (T)

7.11.2 Technical Specifications Packages

	Package HC-					
Parameters	0	1	1C	2	3	4
Error-Free Seconds		X				

A channel with technical specifications package HC1 will be capable of an error-free second performance of 98.75% over a continuous 24 hour period as measured at the 1.544 Mbps rate through a CSU equivalent which is designed, manufactured, and maintained to conform with the specifications contained in Technical Reference PUB 62411 and Technical Advisory TA-TSY-000342.

(This page filed under Transmittal No. 4)

7. Special Access Service (Cont'd)

7.11 High Capacity Service (Cont'd)

7.11.3 Channel Interfaces

The following channel interfaces (CIs) define the bit rates that are available for a High Capacity channel:

CI	Bit Rate
DS-15	1.544 Mbps (DS1)
DS-27	274.176 Mbps (DS4)
DS-31	3.152 Mbps (DS1C)
DS-44	44.736 Mbps (DS3)
DS-63	6.312 Mbps (DS2)

Compatible channel interfaces are set forth in 15.3 following.

7.11.4 Optional Features and Functions

(A) Transfer Arrangement

An arrangement that affords the customer an additional measure of flexibility in the use of their access channel(s). The arrangement can be utilized to transfer a leg of a Special Access Service to either a spare or working channel that terminates in either the same or a different customer designated premises. A dial-up control service is required to operate the transfer arrangement. A spare channel, if required, is not included as part of the option.

7. Special Access Service (Cont'd)

7.11 High Capacity Service (Cont'd)

7.11.4 Optional Features and Functions

(B) Central Office Multiplexing

(1) DS4 to DS1

An arrangement that converts a 274.176 Mbps channel to 168 DS1 channels using digital time division multiplexing.

(2) DS3 to DS1

An arrangement that converts a 44.736 Mbps channel to 28 DS1 channels using digital time division multiplexing.

(3) DS2 to DS1

An arrangement that converts a 6.312 Mbps channel to four DS1 channels using digital time division multiplexing.

(4) DS1C to DS1

An arrangement that converts a 3.152 Mbps channel to two DS1 channels using digital time division multiplexing.

(5) DS1 to Voice/Digital

An arrangement that converts a 1.544 Mbps channel to 24 channels for use with Voice Grade, Digital Data Over Voice or Digital Data Services.

7. Special Access Service (Cont'd)

7.11 High Capacity Service (Cont'd)

7.11.4 Optional Features and Functions (Cont'd)

(B) Central Office Multiplexing (Cont'd)

(6) DS1 to DS0

An arrangement that converts a 1.544 Mbps channel to 23 64.0 Kbps channels utilizing digital time division multiplexing.

(7) DSO to Subrate

An arrangement that converts a 64.0 Kbps channel to subspeeds of up to twenty 2.4 Kbps, ten 4.8 Kbps, or five 9.6 Kbps channels using digital time division multiplexing.

The following table shows the technical specifications packages with which the optional features and functions are available.

	Available with Technical Specifications Package HC-					
	0	1	1C	2	3	4
Central Office Multiplexing:						
DS4 to DS1						X
DS3 to DS1					X	
DS2 to DS1				X		
DS1C to DS1			X			
DS1 to Voice/Digital		X				
DS1 to DS0		X				
DS0 to Subrate*	X					
Cross-Connect		X				
Transfer Arrangement		X				

(N)

(8) Multiplexer Cross-Connect (MCC) (N)

An arrangement which provides the cross-connect of one channel of a Special Access High Capacity DS3 multiplexer to a channel of another Special Access High Capacity DS3 Multiplexer.

Multiplexer Cross-Connection (MCC) will be charged per cross-connect per central office, where the cross-connection is performed. If MCC is provided between two Telephone Company (N)

* Available only on a channel of 1.544 Mbps facility to a Telephone Company DDS hub.

(This page filed under Transmittal No. 17)

ACCESS SERVICE

7. Special Access Service (Cont'd) (N)

7.11 High Capacity Service (Cont'd)

7.11.4 Optional Features and Functions (Cont'd)

(B) Central Office Multiplexing (Cont'd)

(8) Multiplexer Cross-Connect (MCC) (Cont'd)

offices where DS3 multiplexing is performed, appropriate Channel Mileage and Channel Mileage Termination Charges for the lower speed DS1 service will apply between the two central offices along with one MCC charge per cross-connect per central office.

When one service is cross-connected to another service, the two cross-connected services are treated separately for service performance measurement and service interruption credit purposes.

If two customers are involved, one customer will be responsible for the entire billing of MCC. (N)

(This page filed under Transmittal No. 17)

7. Special Access Service (Cont'd)

7.11 High Capacity Service (Cont'd)

7.11.5 Rates and Charges General Description

This section contains the specific regulations governing the rates and charges which apply to High Capacity Services.

DS3 High Capacity Service is available under a month-to-month, one, three or five year billing period as described in 7.11.5.1 (A) following. If the Utility initiates rate changes resulting in a decrease of rates for an existing DS3 service with a 1, 3 or 5 year billing period, those rate changes will be passed along to the customer. Rate changes resulting in an increase of rates for an existing DS3 service with a 1, 3 or 5 year billing period will not exceed the original rate for that selected billing period. (x)

7.11.5.1 DS3 High Capacity Service Rate Description (x)

(A) DS3 High Capacity Service Billing Period

The billing period establishes the amount of time that rates for a service are stabilized by the Utility.

The following billing periods are available for DS3 High Capacity Services and associated optional features and functions:

- Month-to Month (x)
- 1 Year (Channel Termination Only)
- 3 Year (Channel Termination Only)
- 5 Year (Channel Termination Only)

One month prior to the expiration of the billing period, the customer must select one of the following options:

(1) Renew the service for a specified period of time as provided in this tariff under the regulations.

(2) Extend the service for an additional 12 month period at the current rates for the existing 1, 3 or 5 year billing period. (x)

(3) Elect to disconnect the service upon expiration of the billing period. (x)

If a customer selects neither (1), (2) nor (3) above, the current regulations for the Month-to-Month rate option will be applied to the Channel Termination upon expiration of the billing period. (x) (x)

(x)
(x)

x Issued under authority of Special Permission No. 02-051 of the F.C.C. in order to restore currently effective provisions and to withdraw material filed under Transmittal No. 12 without becoming effective.

(This page filed under Transmittal No. 13)

7. Special Access Service (Cont'd)

7.11 High Capacity Service (Cont'd)

7.11.5 Rates and Charges General Description (Cont'd)

7.11.5.1 DS3 High Capacity Service Rate Description (Cont'd)

(A) DS3 High Capacity Service Billing Period (Cont'd)

No nonrecurring charges will apply as long as the same number of DS3s are renewed. Any change in the number of DS3s will incur appropriate nonrecurring charges.

The customer may elect to extend an existing DS3 under a 1, 3 or 5 year billing period for a single, additional 12 month period at the current rates for the existing billing period provided the same number of DS3 circuits are being extended.* (C)

If the current DS3 rates are lower than the original DS3 rates, the lower rate will be charged. (D) (D) (D)

The customer must provide the Utility with a written notice of intent to extend the DS3 billing period no later than one month prior to the expiration of the service period.

An existing DS3 under a 1 or 3 year billing period may be converted to a DS3 under a longer term 3 or 5 year billing period without termination liabilities, provided that:

(1) the expiration date for the new term agreement is beyond the end of the original term agreements, (C) (C) (C)

(2) the converted DS3 must be based upon the rates that are currently in effect and otherwise available to all customers, (T)

(3) the customer maintains the same or greater number of DS3 circuits under the new billing period, and (T)

(4) No lapse in service occurs. (N)

*This option will no longer be available for new circuits provisioned on or after, November 21, 2003. There will be no change to existing circuits. (N) (N)

(This page filed under Transmittal No. 55)

7. Special Access Service (Cont'd)

7.11 High Capacity Service (Cont'd)

7.11.5 Rates and Charges General Description (Cont'd)

7.11.5.1 DS3 High Capacity Service Rate Description (Cont'd)

(B) DS3 High Capacity Service Termination Charges

In the event service is terminated prior to the expiration of the billing period, termination charges will apply. Termination charges do not apply to Month-to-Month service. In the event service is terminated prior to the end of the billing period, a termination charge utilizing the following termination percentage will apply:

Billing Period	Termination Percentage
1, 3 or 5 year	45%

The termination charge is calculated as follows:

Monthly Rate x Months Remaining in Billing Period x Termination Percentage

Example: A customer with a $5,000 monthly rate terminates service with 10 months remaining in a 3 year billing period. The termination charge would be calculated as follows:

$5,000 x 10 x .45 = $22,500

The termination charge would be: $22,500

(2) Customers requesting the termination of a DS3 under a 1, 3 or 5 year billing period prior to the expiration date of an extension of service will be charged a termination charge calculated as follows:

Number of Months Utilized of the Extension of Service X (Current Month To Month Rate - Billing Period Monthly Rate)

(3) When a DS3 High Capacity Service, which is billed under the Shared Use provision is terminated, the termination liability will be based on the full charges as listed in 7.11.5.2 following.

(4) A termination charge will not apply if the customer modifies service as set forth in 7.2.3 (Moves), preceding, as long as the customer maintains the same or greater number of DS3 circuits.

(This page filed under Transmittal No. 1)

7. Special Access Service (Cont'd) (N)

7.11 High Capacity Service (Cont'd)

7.11.5.2 DS1 Term Payment Plan (DS1 TPP)

(A) General Description

The DS1 Term Payment Plan (DS1 TPP) is a term plan that allows a customer to purchase DS1 High Capacity Service over a 1, 2, 3, 5, or 7 year period. During the term of the selected DS1 TPP, Telephone Company initiated recurring rate changes (increases or decreases) will automatically be applied to the monthly payments for the remaining months of the current DS1 TPP term. The monthly recurring rate during the DS1 TPP term will never exceed the initial DS1 TPP rate. The DS1 TPP rates can be found in Section 7.11.5.3 following.

The DS1 TPP cannot be combined with other tariffed services, discounts, or pricing flexibility contracts, unless explicitly stated in the respective tariff terms and conditions.

The following recurring rate elements are included in the DS1 TPP as described in 7.2 (Rate Regulations):

- DS1 High Capacity Service Channel Termination;
- DS1 High Capacity Service Channel Mileage – Channel Mileage Facility (per mile) and Channel Mileage Termination (per termination);
- DS1 High Capacity Service Central Office Multiplexing;
- DS1 High Capacity Service Collocation Transport (Fixed and Per Mile).

(N)

7. Special Access Service (Cont'd)

(N)

7.11 High Capacity Service (Cont'd)

7.11.5.2 DS1 Term Payment Plan (DS1 TPP) (Cont'd)

(B) Conversion of service to a new DS1 TPP or Higher Speed Service

During a customer's DS1 TPP term, conversion may be made to a new DS1 TPP term of the same or different length or an upgrade may be made to a higher speed service, if the expiration date for the new DS1 TPP term or for the new higher service is beyond the expiration of the original DS1 TPP term. The new DS1 TPP term or higher speed service must occur between the same two termination points as the original DS1 service being converted. The new DS1 TPP term or the higher speed service term becomes effective upon completion of the conversion activity. The rates, terms, and conditions applicable for the new DS1 TPP term or higher speed service will be those in effect at the time the conversion is requested. Credit for months under the previous DS1 TPP may not be transferred to the new DS1 TPP or to the higher speed service term. When all conditions described above are met, termination liability for the remaining months on the original DS1 TPP will not apply.

(C) Moves

During a DS1 TPP term a customer may move one end of a DS1 High Capacity Service to another location in the same LATA and keep the DS1 TPP in force provided the following requirements are met:

(1) the customer must have met the minimum in-service period at the previous location and will be subject to a new minimum in-service period at the new location; and

(2) the Move is accommodated on a single customer order with the stipulation that the BAN (Billing Account Number), the NC (Network Channel Code), ACTL (Access Customer Terminal Location) and the ECCKT (Circuit Id) are provided and are the same as for the existing circuit being moved. (N)

(This page filed under Transmittal No. 41)

7. Special Access Service (Cont'd) (N)

7.11 High Capacity Service (Cont'd)

7.11.5.2 DS1 Term Payment Plan (DS1 TPP) (Cont'd)

(C) Moves (Cont'd)

Moves to a different wire center may result in a change in the application of the rate elements associated with the service and therefore could result in a change in the monthly recurring charges.

EXAMPLE #1: One end of a DS1 is changed from Location A to Location B within the same LATA. The new Channel Mileage associated with the one-ended Move increased by 2 miles. Therefore, the resulting Channel Mileage calculation increases the monthly recurring charge accordingly.

EXAMPLE #2: One end of a DS1 is changed from Location C to Location D within the same LATA. The new Channel Mileage associated with the one-ended Move decreased by 5 miles. Therefore, the resulting Channel Mileage calculation decreases the monthly recurring charge accordingly.

If no lapse in service occurs and if the requirements in (1) and (2) as stated previously are met, termination liability will not apply. Nonrecurring Channel Termination Charges or Nonrecurring Collocation Transport Charges for the physical move will apply.

(D) Expiration of DS1 TPP Term options

DS1 TPP is not available for renewal. At the expiration of the DS1 TPP term, the customer may select a new DS1 TPP term at the prevailing DS1 TPP rates. If a customer does not wish to purchase a new DS1 TPP at the expiration of the term, the customer's service will automatically convert to the current month-to-month rates. (N)

7. Special Access Service (Cont'd)

7.11 High Capacity Service (Cont'd)

7.11.5.2 DS1 Term Payment Plan (DS1 TPP) (Cont'd)

(E) DS1 High Capacity Service Portability Commitment

DS1 High Capacity Service Portability Commitment provides a customer the ability to establish a regional volume commitment in the form of DS1 Channel Terminations and receive a waiver on DS1 TPP Termination Liability, as described in 7.11.5.2(G), during the life of the Portability Commitment. The Portability Commitment will consist of a Commitment Level (CL), as described below, and will last 3-years. The Portability Commitment cannot be renewed.

Customers may purchase DS1 service under DS1 TPP terms of 2, 3, 5, or 7 years and have the associated Channel Terminations count towards the CL.

Following are the terms and conditions associated with the Portability Commitment:

(1) Customer commits to a 3-Year Commitment Level (CL) that is reviewed on a monthly basis. The initial monthly CL is calculated by Telephone Company and is the total of all DS1 Channel Terminations in-service for the month previous to the month in which the Portability Commitment form is signed. The initial monthly CL will consist of all Channel Terminations including those on Month-to-Month terms and other term pricing plans. The effective date of the Portability Commitment will be the first day of the month immediately following the month in which the Portability Commitment is signed; and

(2) Customer must have a minimum of 40 Channel Terminations in-service each month and at least 80% of the CL under a 2, 3, 5,or 7 year DS1 TPP each month; and (C)

(This page filed under Transmittal No. 66)

7. Special Access Service (Cont'd) (N)

7.11 High Capacity Service (Cont'd)

7.11.5.2 DS1 Term Payment Plan (DS1 TPP) (Cont'd)

(E) DS1 High Capacity Service Portability Commitment (Cont'd)

(3) Each month, the total number of 2, 3, 5, and 7 year DS1 TPP Channel Terminations for the previous month will be calculated and measured against the corresponding monthly CL;

(a) If the total number of Channel Terminations, as calculated above, is 80% - 124% of the CL, no other charges will apply for the previous month.

(b) If the total number of Channel Terminations, as calculated above, is less than 80% of the CL, charges will be assessed as follows:

(i) Customer will be billed the difference between 80% of the CL and the actual number of in-service Channel Terminations.

EXAMPLE #1:Customer A has a CL = 1,000 Channel Terminations for the month of June. Customer A must have at least 800 DS1 Channel Terminations in-service to meet the 80% target. In July, the monthly review calculated 795 DS1 Channel Terminations in-service for the month of June. The difference between 80% of the CL (800) and the actual in-service total (795) is 5 Channel Terminations. Therefore, the customer will be billed an amount equal to 5 Channel Terminations multiplied by the current Nonrecurring Channel Termination rate. For subsequent months, Customer A will continue to be billed an amount equal to the difference between 80% of the CL and the actual in-service number of Channel Terminations that are below 80% of the CL (multiplied) by the current nonrecurring Channel Termination rate, until 80% of the CL is met.

(c) If the total number of in-service Channel Terminations, as calculated above, is more than 124% of the CL, the customer will be billed an adjustment factor equal to the Nonrecurring Channel Termination charge multiplied by the difference between the actual number of Channel Terminations in-service and 124% of the CL. (N)

7. Special Access Service (Cont'd) (N)

7.11 High Capacity Service (Cont'd)

7.11.5.2 DS1 Term Payment Plan (DS1 TPP) (Cont'd)

(E) DS1 High Capacity Service Portability Commitment (Cont'd)

(3) (Cont'd)

(ii) EXAMPLE #2: Customer B has a CL of 500 Channel Terminations. In month 5 of the commitment, Customer B has 650 Channel Terminations in-service. Customer B has exceeded the CL by more than the 124% threshold (620). Customer B will be charged an adjustment factor equal to 30 Channel Terminations (650-620)(multiplied) by the current Nonrecurring Channel Termination rate. For subsequent months, Customer B will continue to be charged the Nonrecurring Channel Termination rate multiplied by the difference between the actual number of Channel Terminations in-service and 124% of the CL until Customer B no longer exceeds the CL by the 124% threshold.

(d) Customers may increase the Commitment Level (CL) at any time by providing written notification to Telephone Company. Credits for previously charged adjustments billed for exceeding the CL will not be provided when a customer increases the CL.

(e) If the customer elects to terminate the DS1 High Capacity Service Portability Commitment or elects to decrease the CL prior to the 3-Year commitment, Termination Liabilities will apply. Termination Liability is calculated as the decreased number of Channel Terminations (multiplied) by the prevailing Month-to-Month recurring rate (multiplied) by the number of months remaining in the term of the Portability Commitment.

(i) EXAMPLE #3: Customer C has a CL equal to 1,000 Channel Terminations. In month 10 of the 36-month Portability Commitment, Customer C elects to decrease the CL by 50 Channel Terminations. The Termination Liability associated with the decrease is equal to:

(50 Channel Terminations) X (26 months remaining) X (prevailing Month-to-Month Rate)

(N)

7. Special Access Service (Cont'd) (N)

7.11 High Capacity Service (Cont'd)

7.11.5.2 DS1 Term Payment Plan (DS1 TPP) (Cont'd)

(E) DS1 High Capacity Service Portability Commitment (Cont'd)

(3) (Cont'd)

(ii) EXAMPLE #4: Customer D has a CL equal to 500 Channel Terminations. In month 20 of the 36-month Portability Commitment, Customer D elects to terminate the entire Portability Commitment. The Termination Liability associated with the termination of the entire commitment is equal to:

(500 Channel Terminations) X (16 months remaining) X (prevailing Month-to-Month Rate)

(F) Applicable One-Time Charges

(1) DS1 Term Payment Plan Non-Recurring Charges

Non-recurring channel termination charge will apply per channel termination on new installations of DS1 High Capacity Service on 1 year DS1 TPP term, and on all physical moves of DS1 High Capacity Services. Non-recurring channel termination charges will be waived on new installations with 2, 3, 5, and 7 year DS1 TPP terms. The Nonrecurring Channel Termination Charge will also apply, applicable as stated in 7.11.5.2(E) previously, for customers who have a DS1 High Capacity Service Portability Commitment. (N)

7. Special Access Service (Cont'd) (N)

7.11 High Capacity Service (Cont'd)

7.11.5.2 DS1 Term Payment Plan (DS1 TPP) (Cont'd)

(G) Termination Liability

Termination liability charges will apply in the following cases:

(1) In the event service is terminated prior to the expiration of the minimum service period, charges, as specified in Section 5.2.5 (Minimum Period), will apply in addition to the termination liability charges identified in 7.11.5.2(G)(2) following.

(2) In the event service is terminated prior to the end of the DS1 TPP term, a termination charge utilizing the following termination percentage will apply:

Termination Billing Period Percentage: 40%

The termination charge is calculated as follows:

(Monthly Recurring Rate) X (Months remaining in DS1 TPP term) X (Termination Billing Period Percentage)

Example: A customer with a $500 monthly rate terminates service with 10 months remaining in a 3 year DS1 TPP term. The termination liability charge would be calculated as follows:

($500) X (10) X (.40) = $2000 (N)

7. Special Access Service (Cont'd)

7.11 High Capacity Service (Cont'd)

7.11.5 Rates and Charges General Description (Cont'd)

7.11.5.3 Rates and Charges[1]

	USOC	Monthly Rate	Nonrecurring Charges
(A) Channel Termination (Per Point of Termination)			
- 1.544 Mbps	TMECS	$123.45	$412.50
- 3.152 Mbps	TWT++	ICB	ICB
- 6.312 Mbps	TWT++	ICB	ICB
-44.736 Mbps(Month-to-Month*)	Z3MAC/TMECS	$2,125.00	$1,500.00
-44.736 Mbps(Monthly Extension)	Z3MAC/TMECS	$2,125.00	$1,500.00
-44.736 Mbps(1 Year Plan)	Z3MAC/Z31A+	$1,450.00	$1,000.00
-44.736 Mbps(3 Year Plan)	Z3MAC/Z33A+	$900.00	$0.00
-44.736 Mbps(5 Year Plan)	Z3MAC/Z35A+	$800.00	$0.00
-274.176 Mbps	TWT++	ICB	ICB

	USOC	Monthly Rate
(B) Channel Mileage[2]		
(1) Channel Mileage Facility (Per Mile)		
- 1.544 Mbps	IL5XX/CMF	$9.00
- 3.152 Mbps	CMF	ICB
- 6.312 Mbps	CMF	ICB
-44.736 Mbps(Month-to-Month*)	IL5XX/CMF	$39.00
-44.736 Mbps(Monthly Extension)	IL5XX/CMF	$39.00
-44.736 Mbps(1 Year Plan)	IL5XX/CMF	$38.00
-44.736 Mbps(3 Year Plan)	IL5XX/CMF	$36.50
-44.736 Mbps(5 Year Plan)	IL5XX/CMF	$35.00
-274.176 Mbps	CMF	ICB
(2) Channel Mileage Termination (Per Termination)		
- 1.544 Mbps	IL5XX/CMF	$51.50
- 3.152 Mbps	CMT	ICB
- 6.312 Mbps	CMT	ICB
-44.736 Mbps(Month-to-Month*)	IL5XX/CMF	$347.50(x)
-44.736 Mbps(Monthly Extension)	IL5XX/CMF	$347.50(x)
-44.736 Mbps(1 Year Plan)	IL5XX/CMF	$342.50
-44.736 Mbps(3 Year Plan)	IL5XX/CMF	$337.50
-44.736 Mbps(5 Year Plan)	IL5XX/CMF	$332.50
-274.176 Mbps	CMT	ICB

*This option will no longer be available for new circuits provisioned on or after, November 21, 2003. There will be no change to existing circuits.

Note 1: ICB rates and charges are filed in 7.12 following.
Note 2: When the customer orders High Capacity Service as described in 7.11 and 7.11.5.2, preceding, the Channel Mileage Facility must be ordered in conjunction with an associated Channel Termination as described in 7.2.1(A), preceding.

(x) Issued under authority of Special Permission No. 04-009 of the FCC in order to restore currently effective material and to withdraw material without becoming effective, filed under Transmittal No. 59.

(This page filed under Transmittal No. 60)

ACCESS SERVICE

7. Special Access Service (Cont'd)

7.11 High Capacity Service

7.11.5 Rates and Charges General Description (Cont'd)

7.11.5.3 Rates and Charges (Cont'd) (T)

	USOC	Monthly Rate	
(C) Optional Features and Functions			
(1) Multiplexing, per arrangement			
DS4 to DS1	MXA++	ICB	
DS3 to DS1[1]			
Month-to-Month*	MQ3	$425.00	(C)
Monthly Extension	MQ3	$425.00	(N)
1 Year	MQ3	$420.00	
3 Year	MQ3	$410.00	
5 Year	MQ3	$400.00	(N)
DS2 to DS1	MXD++	ICB	
DS1C to DS1	MXH++	ICB	
DS1 to Voice/Digital*	MQ1/MQ1++	$170.00	
DS1 to DS0	QMU/QMUA1/QMU++**	$170.00	
DS0 to Subrates			
-Up to 20 2.4 kbps services	QSU24	$175.00	
-Up to 10 4.8 kbps services	QSU48	$175.84	
-Up to 5 9.6 kbps services	QSU96	$124.84	

* A channel of this DS1 to a multiplexing Hub can be used for Digital Data Service or Digital Data Over Voice.
** QMU and QMUA1 are used in CABS. QMU++ is used in CRIS billing system.
ICB rates and charges are filed in 7.12 following.
[1] This option will no longer be available for new circuits provisioned on or after, November 21, 2003. There will be no change to existing circuits.

(This page filed under Transmittal No. 55)

7. Special Access Service (Cont'd)

7.11 High Capacity Service

7.11.5 Rates and Charges General Description (Cont'd)

7.11.5.3 Rates and Charges (Cont'd)

	USOC	Monthly Rate	Nonrecurring Rate
(C) Optional Features and Functions (Cont'd)			
(2) Multiplexer Cross-Connect - per cross-connect, per central office	1L5TC	$10.00	$80.00
(3) Transfer Arrangement (dial-up*) - per four port arrangement including control channel termination**	USV	ICB	

(D) DS1/DS3 Rollover	USOC	Nonrecurring Charge
-per DS1 Channel Termination	NRBR1/NRBRH/SVR***	$300.00
-per DS3 Channel Termination	NRBR3/SVR	825.00

(E) Collocation Transport

	USOC	Monthly Rate Fixed	Monthly Rate Per Mile	Nonrecurring Charges 1st Ckt.	Nonrecurring Charges Addl Ckt.
1.544 Mbps	(1H48S)	$51.50	$9.00	$300.00	$300.00

44.736 Mbps	USOC (1H48S)	Monthly Rate Fixed	Monthly Rate Per Mile	Nonrecurring Charges 1st Ckt.	Nonrecurring Charges Addl Ckt.
Month-to-Month[1]		$347.35(x)	$39.00	$1,500.00	$1,500.00
Monthly Extension		$347.35(x)	$39.00		
1 Year Plan		$342.50	$38.00	$1,000.00	$1,000.00
3 Year Plan		$337.50	$36.50	$0.00	$0.00
5 Year Plan		$332.50	$35.00	$0.00	$0.00

* The Dial-Up option requires the customer to purchase the Controller Arrangement from 13.3.7 following.

* An additional Channel Termination charge will apply whenever a spare channel is configured as a leg to the customer premises. Additional channel mileage charges will also apply when the transfer arrangement is not located in the customer premises serving wire center

*** NRBR1 and NRBRH are used in CABS. SVR is used in CRIS billing system.

[1] This option will no longer be available for new circuits provisioned on or after, November 21, 2003. There will be no change to existing circuits.

(x) Issued under authority of Special Permission No. 04-009 of the FCC in order to restore currently effective material and to withdraw material without becoming effective, filed under Transmittal No. 59.

(This page filed under Transmittal No. 60)

7. Special Access Service (Cont'd) (N)

7.11 High Capacity Service

7.11.5 Rates and Charges General Description (Cont'd)

7.11.5.3 Rates and Charges (Cont'd)

(F) DS1 Term Payment Plan

(1) Channel Termination
- Per Point of Termination

USOC	1 Year	2 Year	3 Year	5 Year	7 Year
TMECS	$122.50	$120.00	$115.00	$ 105.00	$100.00

(2) Channel Mileage
- Channel Mileage Termination (per termination)

USOC	1 Year	2 Year	3 Year	5 Year	7 Year
1L5XX	$ 50.00	$ 45.00	$ 40.00	$ 35.00	$ 32.50

- Channel Mileage Facility (per mile)

USOC	1 Year	2 Year	3 Year	5 Year	7 Year
1L5XX	$ 9.00	$ 9.00	$ 8.75	$ 8.50	$ 8.25

(3) Central Office Multiplexing DS1 to DS0 voice/digital
-Per arrangement

USOC	1 Year	2 Year	3 Year	5 Year	7 Year
MQ1, MQ1++, QMU, QMUA1, QMU++	$170.00	$170.00	$170.00	$ 160.00	$150.00

(4) Collocation Transport
-Channel Mileage
- Fixed

USOC	1 Year	2 Year	3 Year	5 Year	7 Year
1H48S	$ 50.00	$ 45.00	$ 40.00	$ 35.00	$ 32.50

- Per Mile

USOC	1 Year	2 Year	3 Year	5 Year	7 Year
1H48S	$ 9.00	$ 9.00	$ 8.75	$ 8.50	$ 8.25

(5) Nonrecurring Charges-One Time Charges
- Per point of channel termination

USOC	DESCRIPTION	RATE
TMECS	Channel Termination Nonrecurring Charge	$ 900.00
1H48S	Collocation Transport Nonrecurring Charge	

NOTE: Channel Termination Nonrecurring Charges and Collocation Transport Nonrecurring Charges are waived on new installations of DS1 High Capacity Service with a 2, 3, 5, or 7 year DS1 TPP. (N)

(This page filed under Transmittal No. 41)

7. Special Access Service (Cont'd)

(M)

(M)

7.12 Fractional DS1 Service (N)

(A) Basic Channel Description

A Fractional DS1 channel provides for the digital transmission of nominal 128, 256, 384, 512, 768 kbps, serial data. The actual bit rate is a function of the channel interface selected by the customer. Fractional DS1 channels are provided for two-point service between customer designated premises or between a customer designated premises and a Telephone Company Digital Hub. Rates for Fractional DS1 Service can be found in Section 7.12.1.

When a single Fractional DS1 channel is ordered to be terminated at a customer's designated POP, which requires a minimum digital interface level at 1.544 Mbps, the Telephone Company will provide the required interface where facilities are available.

Fractional DS1 service is offered only where equipment and facilities are available. Fractional DS1 service is provisioned from specific wire centers which are listed in the National Exchange Carrier Association, Inc. Tariff FCC No. 4. Availability is not restricted to customers serviced by the wire centers listed in FCC No. 4, but the service must be routed through the designated offices in FCC No. 4. Mileage, as defined in 7.2.5 (Mileage Measurement) will apply.

It is the customer's responsibility to arrange for the Channel Service Unit-type equipment or other Network Channel Terminating Equipment associated with the Fractional DS1 channel at the customer premises.

Rates and charges for Fractional DS1 Service can be found in Section 7.12.1 following.

Certain material previously appearing on this page now appears on Original 7-94.

(N)

7. Special Access Service (Cont'd) (N)

7.12 Fractional DS1 Service (Cont'd)

(B) Technical Specifications Packages

Technical Specifications Package HC1 will apply for all speeds of Fractional DS1 Service.

A Fractional DS1 channel with Technical Specifications Package HC1 will be capable of an error-free second performance of 98.75% over a continuous 24 hour period as measured at the 1.544 Mbps rate through a Channel Service Unit equivalent which is designed, manufactured, and maintained to conform with the specifications contained in the Technical Reference for High Capacity Service.

(C) Channel Interfaces (CI)

The following channel interfaces define the bit rates that are available for a Fractional DS1 channel:

CI	Bit Rate
DS-1S	128, 256, 384, 512, 768 kbps

(D) Termination Liability for Fractional DS1 Services Purchased Under a Three or Five Year Term

Termination liability charges will apply in the following cases:

(1) In the event service is terminated prior to the expiration of the minimum service period, charges, specified in Section 5.2.5 (Minimum Period), will apply in addition to the termination liability charges identified in 7.12(D)(2) following.

(2) In the event service is terminated prior to the end of the Fractional DS1 term, a termination charge utilizing the following termination percentage will apply:

Termination Billing Period Percentage: 40%

The termination charge is calculated as follows:

(Monthly Recurring Rate) X (Months remaining in term) X (Termination Billing Period Percentage)

Example: A customer with a $500 monthly rate terminates service with 10 months remaining in a 3 year Fractional DS1 term. The termination liability charge would be calculated as follows:

($500) X (10) X (.40) = $2000

(N)

(This page filed under Transmittal No. 63)

7. Special Access Service (Cont'd) (N)

7.12 Fractional DS1 Service (Cont'd)

7.12.1 Rates and Charges - 128, 256, 384, 512, and 768 Kbps

(A) Channel Termination
- Per Point of Termination TMECS

	Recurring Charges	Nonrecurring Charges 1st CKT	Addl CKT
MTM	$125.00	$900.00	$900.00
3 Year	$115.00	$900.00	$900.00
5 Year	$105.00	$900.00	$900.00

(B) Channel Mileage
- Fixed

USOC	MTM	3 Year	5 Year
1L5XX	$50.00	$35.00	$30.00

Channel Mileage
- Per Mile

USOC	MTM	3 Year	5 Year
1L5XX	$9.00	$8.25	$8.00

(N)

7. Special Access Service (Cont'd)

7.13 Gigabit Ethernet Metropolitan Area Network (GigaMAN®) (Cont'd) (T)

7.13.1 Basic Channel Description

GigaMAN® is a fiber based, point-to-point, gigabit Ethernet service that allows customers to transport data signals between local area networks (LANs). GigaMAN® transports data signals at the rate of 1 gigabit per second (Gbps). All basic service configurations provide a single direction of transmission. (T) (T) (D) (D) (D) (D)

The following regulations will apply to GigaMAN®: (T)

(A) This service is available to customers in those LATAs served by and within the service territories of Nevada Bell Telephone Company (NBTC) only.

(B) If existing facilities do not exist Special Construction will apply. (D) (D) (D) (D)

(C) The Telephone Company considers a service interrupted when it becomes unusable to the customer because of a failure of a facility component used to furnish service under this tariff in the event that the protective controls applied by the Telephone Company result in the complete loss of service by the customer. An interruption period starts when a customer reports an inoperative service to the Telephone Company and the Telephone Company confirms that continuity has been lost, and ends when the service is operative. (T) (T) (T) (T)

7. Special Access Service (Cont'd)

7.13 Gigabit Ethernet Metropolitan Area Network (GigaMAN®) (Cont'd) (T)

7.13.1 Basic Channel Description (Cont'd)

(D) Service Provisioning (T)

(1) The customer provided equipment(CPE) must deliver the data signals for GigaMAN® transport for the subscribed data service. (T)

(2) GigaMAN® provides physical layer transport only. The Telephone Company assumes no responsibility for the through transmission of signals generated by the CPE, for the signals by the CPE, or address signaling to the extent the CPE performs addressing. Error detection and correction of data generated by the CPE is the customer's responsibility. (T) (T)

7.13.2 Channel Configuration

There are six (6) basic rate elements, which apply to GigaMAN® service: (C) (T)

(A) Local Distribution Channel (LDC)

Local Distribution Channel (same as Channel Termination) is the termination of GigaMAN® at a customer designated premise (node), as described in 7.1.2 (A), consisting of the following two elements: (T) (C)

(1) the termination for the fiber optic facilities at each node and its serving wire center.

(2) the fiber optic facility between each node and its serving wire center.

(B) Interoffice Mileage

Interoffice Transport facilities, which provide the transmission path between Serving Wire Centers associated with two customer designated premises, are comprised of Fixed and Per Mile rate elements.

7. Special Access Service (Cont'd) (N)

7.13 Gigabit Ethernet Metropolitan Area Network (GigaMAN®) (Cont'd)

7.13.2 Channel Configuration (Cont'd)

(C) Repeater

Repeaters (Circuit Regenerators) provide essential detection and retransmission of GigaMAN® signals. Repeaters are provided as required by the Telephone Company when actual fiber facility loss between customer designated premises and/or central office locations exceed design limits. Repeaters will be located exclusively in Telephone Company central offices and are required for each successive transport segment of approximately 21.4 db.

(D) Local Channel Diversity

Local Channel Diversity provides for a transmission path between a designated customer premises and the standard service wire center (SWC) that is diverse from the normal/standard transmission path. With this arrangement, one or more local distribution channels will be provisioned over the standard route and one or more local distribution channels will be provisioned over the diverse route. Local channel diversity does not provide for all diversity, it only allows for diversity from the splice point closest to the customer's property line to the SWC. If a customer desires full diversity, arrangements must be made for constructing dual entrance facilities into the customer's premises, at the customer's expense.

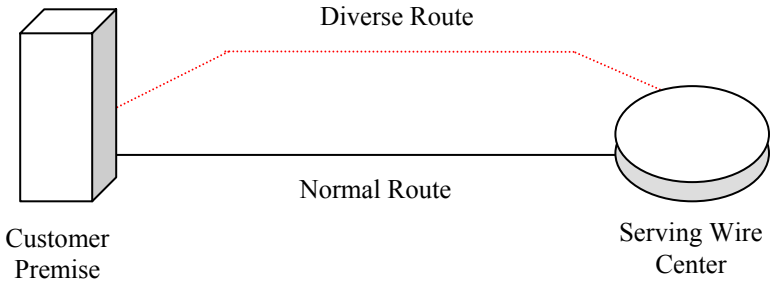

(N)

(N)

7. Special Access Service (Cont'd)

7.13 Gigabit Ethernet Metropolitan Area Network (GigaMAN®) (Cont'd)

7.13.2 Channel Configuration (Cont'd)

(E) Inter-Wire Center (IWC) Diversity

Inter-Wire Center (IWC) Diversity arrangements presume that each end of a GigaMAN® local distribution channel is serviced out of a different serving wire center (SWC). This arrangement provides a transmission path for GigaMAN® local distribution channels between the customer's designated SWC and the SWC at the distant end of the circuit over a transmission path that is separate from the standard transmission path between the two wire centers. IWC diversity does not provide for full diversity. It only offers interoffice diversity. If a customer desires full diversity, Alternate Wire Center Diversity must be implemented along with IWC Diversity. Additionally, arrangements must be made for constructing dual entrance facilities at the customer's premises, at the customer's expense. (N)

(N)

7. Special Access Service (Cont'd)

7.13 Gigabit Ethernet Metropolitan Area Network (GigaMAN®) (Cont'd)

7.13.2 Channel Configuration (Cont'd)

(E) Inter-Wire Center (IWC) Diversity (Cont'd)

(1) Inter-Wire Center (IWC) Diversity Mileage Measurement

Mileage measurements for Access Services provisioned via an Inter-Wire Center Diversity, will be based on the special routing; i.e. mileage measurements will be calculated between the Intermediate Serving Wire Centers along the circuit path of the diversely routed GigaMAN® service

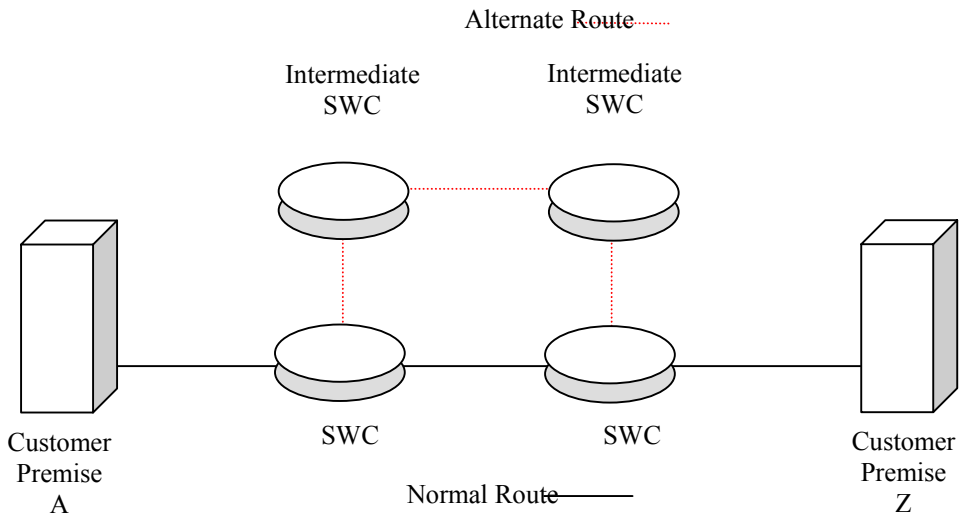

(N)

(N)

7. Special Access Service (Cont'd)

7.13 Gigabit Ethernet Metropolitan Area Network (GigaMAN®) (Cont'd)

7.13.2 Channel Configuration (Cont'd)

(F) Alternate Wire Center Diversity

Alternate Wire Center Diversity is for the local loop only. It provides a local channel transmission path for GigaMAN® service between the customer's designated premises and a wire center that is not the normal (or standard) service wire center. The Telephone Company will choose the alternate wire center closest to the customer's designated premises that is capable of providing GigaMAN® service over the alternate route. If a customer desires full diversity, arrangements must be made for constructing dual entrance facilities into the customer's premises, at the customer's expense.

If the circuit routed to the alternative wire center has Interoffice Mileage, measurements will be based on the special routing; i.e., mileage measurements will be made to the alternate wire center rather than the serving wire center from which the customer designed premises would normally obtain dial tone.

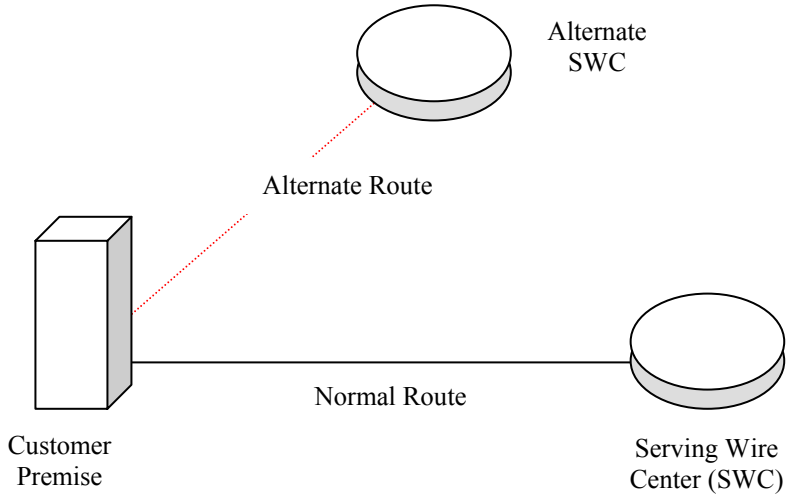

(N)

7. Special Access Service (Cont'd)

7.13 Gigabit Ethernet Metropolitan Area Network (GigaMAN)(Cont'd)

7.13.3 Non-recurring Charges (N)

Non-recurring charges are one–time charges that apply for specific work activity related to the provisioning of GigaMAN Service, as described in Section 7.2.2(C).

7.13.4 Recurring Charges

Recurring Charges are rates that apply each month or fraction thereof that the service is provided. Recurring rates apply to 12-, 36-, or 60- month periods under the terms and conditions of Term Pricing Plan (TPP), discussed in Section 7.13.6, following.

7.13.5 Monthly Extension Rates

Upon completion of a TPP, customer's service will automatically convert to the Monthly Extension Rates unless the customer requests a new TPP.

7.13.6 Term Pricing Plan (TPP)

GigaMAN is available for 12-, 36-, or 60- month periods. Monthly recurring charges apply for Local Distribution Channels (TMECS), Interoffice Transport Fixed Mileage (1L5XX), and Mileage (1L5XX) where appropriate.

(A) Renewals

At the end of a TPP period, the customer must select one of the following options within one month prior to the expiration date:

(1) Renew the service for a one, three, or five year TPP as provided in this tariff;
(2) Elect to disconnect the service upon expiration of the billing period; or
(3) Continue the service on a monthly basis at the current Monthly Extension Rates.

All services under an existing TPP that are not renewed within the period stated above will revert to Option (A)(3) above and be billed at the current Monthly Extension Rates. (N)

ACCESS SERVICE

7. Special Access Service (Cont'd)

7.13 Gigabit Ethernet Metropolitan Area Network (GigaMAN) (Cont'd)

7.13.6 Term Pricing Plan (TPP) (Cont'd)

(B) Conversions (N)

During the customer's TPP term conversions may be made to a new TPP term of the same or greater length. The expiration date of the new service must be beyond the expiration date of the original TPP term. With the new TPP, the customer incurs no liability for the remaining months on the original TPP.

An Administrative Charge is applicable when customers renew or change the length of the TPP term.

(C) Termination Liability

Customers requesting termination of service prior to expiration date of the TPP term will be liable for a termination charge, which is calculated as follows:

Billing Period	Termination Percentage
1 Year	85%
3 Year	75%
5 Year	60%

(Monthly Recurring Rate)*(Months Remaining in Billing)*(Termination Percentage) = Term. Liability Charge

Example: A GigaMAN Customer with a $6,000.00 monthly rate terminates service after 2 years with 1 year (12 months) remaining in a 3 year TPP. The termination liability would be calculated as follows:

$6,000 X 12 X .75 = $54,000.00 Termination Charge (N)

7. Special Access Service (Cont'd)

7.13 Gigabit Ethernet Metropolitan Area Network (GigaMAN) (Cont'd)

7.13.7 Moves (N)

Moves involve a change in the physical location of one of the following

- Service rearrangement;
- Point of Termination at the customer's premises; or
- Customer's premises.

Move charges dependent upon the type of move requested by the customer.

(A) Service Rearrangement

Service Rearrangements are changes to existing(installed) services, which do not result in either a change in the minimum period requirements, as set forth in Section 7.2.2(C)(3).

(B) Moves Within the Same Building

When the move is to a new location within the same building, the Administration charge and Customer Connection charge for the service termination affected will apply. There will be no change in the minimum period requirements, as described in Section 7.2.3(A).

(C) Moves to a Different Building

Moves to a different building will be treated as a discontinuance therefore start of service, all associated nonrecurring charges, and new minimum period requirements, as described in Section 7.2.3(B) will apply.

7.13.8 Mileage Measurement

The mileage is calculated on the airline distance between the locations involved, i.e. the serving wire centers associated with two customer designated premises and an international boundary point, a serving wire center associated with a customer designated premise and a Telephone Company Hub, a serving wire center associated with a customer designated premise and a WATS Serving Office as described in Section 7.2.5. (N)

ACCESS SERVICE

7. Special Access Service (Cont'd)

7.13 Gigabit Ethernet Metropolitan Area Network (GigaMAN)(Cont'd)

7.13.9 Upgrade to GigaMAN from other Access Products (N)

Other Access products may not upgrade to GigaMAN without incurring applicable Termination Liability charges, if any, on that current access product.

7.13.10 Modification of Access Service

The customer may request a modification of its Access Order at anytime prior to notification by NBTC that service is available for the customer's use. NBTC will make every effort to accommodate a requested modification when it is able to do so with the normal work force assigned to complete such an order within normal business hours. If the modification cannot be made with the work force during normal business hours, NBTC will notify the customer. If the customer still desires the Access Order Modification, NBTC will schedule a new service date. All charges for Access Order modifications will apply on a per occurrence basis as described in Section 5.2.2. (N)

7. Special Access Service (Cont'd) (x)

(x)

(x) Issued under authority of Special Permission No. 03-093 of the FCC in order to withdraw material without becoming effective filed under Transmittal No. 52.

(This page filed under Transmittal No. 53)

7. Special Access Service (Cont'd) (x)

(x)

(x) Issued under authority of Special Permission No. 03-093 of the FCC in order to withdraw material without becoming effective filed under Transmittal No. 52.

7. Special Access Service (Cont'd)

7.13. Gigabit Ethernet Metropolitan Area Network (GigaMAN®) (Cont'd) (T)

7.13.12 Rates and Charges General Description

(A) Recurring Charges

	USOC	Monthly Extension	Term Pricing Plan 12 Mo.	36 Mo.	60 Mo.	NRC	(N)
(1) Local Distribution Channel							
- Per Point of Termination Terminating Bit Rate 1 Gbps - All States	TMECS	$3,800.00	$3,300.00	$2,850.00	$2,500.00		
(2) Interoffice Transport Mileage							
- Fixed - All States	1L5XX	$250.00	$250.00	$200.00	$100.00		
- Per Mile 1 Gbps - All States	1L5XX	$125.00	$125.00	$100.00	$75.00		
(3) Repeater -each	VU4	$2,500.00	$2,400.00	$1,150.00	$850.00		(N)
(4) Diversity Options							
Local Channel Diversity -Per Channel Terminating Bit Rate 1 Gbps -All States	CPALX	$750.00	$750.00	$750.00	$750.00	0.00	
Inter Wire Center Diversity -Per Channel Terminating Bit Rate 1 Gbps -All States	CPATX	$500.00	$500.00	$500.00	$500.00	0.00	
Alternate Wire Center Diversity -Per Channel Termination bit Rat 1 Gbps -All States	CPAAX	$1,200.00	$1,200.00	$1,200.00	$1,200.00	0.00	

(N)

Certain material previously appearing on this page now appears on 2nd Revised Page 7-93.

(This page filed under Transmittal No. 56)

7. Special Access Service (Cont'd) (N)

7.13 Gigabit Ethernet Metropolitan Area Network (GigaMAN®) (Cont'd)

7.13.12 Rates and Charges General Description (Cont'd) (N)

(B) Installation and Rearrangement Charges (M)

All States

	USOC	12 Months	36 Months	60 Months
(1) Administrative Charge per Order	ORCMX	$60.00	$60.00	$60.00
(2) Design Central Office Connection Charge per circuit	NRMCK	N/A	N/A	N/A
(3) Customer Connection Charge per termination	NRBBL	$1,500.00	$1,500.00	$1,500.00

(M)

Certain material appearing on this page previously appeared on 2nd Revised Page 7-92.

(This page filed under Transmittal No. 56)

7. Special Access Service (Cont'd) (M)

7.14 Individual Case Filings (T)

Rates and charges for Special Access Service provided on an individual case basis are filed following: (M) (M)

Certain material appearing on this page previously appeared on Original Page 7-85.

(This page filed under Transmittal No. 63)