8. ADVANCED COMMUNICATIONS NETWORKS (T)

ALPHABETICAL BY SUBJECT **PAGE**

ATM Cell Relay Service 8-316
Pricing Plans 8-336
Rate Elements 8-333
Rates and Charges 8-340
Regulations 8-332

Changes of Service 8-3

Frame Relay Service 8-74
Pricing Plans 8-91
Rate Elements 8-87
Rates and Charges 8-106
Regulations 8-85

General 8-1
Changes of Service 8-3
Moves 8-2
Order Modifications 8-1
Prepayment Discount 8-17
Promotions 8-18
Special Construction 8-1
Spread of Nonrecurring Charges 8-15
Termination Liability and Waiver Policy 8-5

Local Area Network Switching Service 8-429
Pricing Plans 8-433
Rate Elements 8-432
Rates and Charges 8-434

8. ADVANCED COMMUNICATIONS NETWORKS (T)

ALPHABETICAL BY SUBJECT **PAGE**

Modem Aggregation Service (Grandfathered) 8-447
Pricing Plans 8-450
Rate Elements 8-449
Rates and Charges 8-451
Moves 8-2

Order Modifications 8-1

Promotions 8-18
Public Packet Switching Network 8-41
Pricing Plans 8-58
Rate Elements 8-51
Rates and Charges 8-61
Regulations 8-49

QWEST DSL Service 8-288
Pricing Plans 8-304
Rate Elements 8-301
Rates and Charges 8-306
Regulations 8-298

Special Construction 8-1

Termination Liability and Waiver Policy 8-5

8. ADVANCED COMMUNICATIONS NETWORKS

8.1 GENERAL

Advanced Communications Networks (ACS) consist of the Public Packet Switching Network (PPSN), Frame Relay Service (FRS), *QWEST DSL* Service, ATM Cell Relay Service (ATM CRS) and LAN Switching Service (LSS). (T)

8.1.1 SPECIAL CONSTRUCTION

FRS and ATM CRS will be available at Company Service Point locations. The offering of FRS, *QWEST DSL* Service, ATM CRS and LSS contemplates the use of existing facilities. There may be occasions when the service is not available due to facility limitations, or where it may be necessary to construct such facilities as either normal or Special Construction. If Special Construction is involved, the regulations as set forth in Tariff F.C.C. No. 2 apply. (T)

8.1.2 ORDER MODIFICATIONS

PPSN, FRS, *QWEST DSL* Service, ATM CRS and LSS are ordered under the Access Order provisions as set forth in Section 5, preceding. (T)

8. ADVANCED COMMUNICATIONS NETWORKS

8.1 GENERAL (T)(M)

8.1.3 MOVES (Cont'd) (T)

A move involves a change in the physical location of one of the following:

- The network interface at the customer's premises
- The customer's premises

The charges for the move are dependent upon whether the move is to a new location within the same building or to a different building.

A. Moves Within the Same Building (T)

When the move is to a new location within the same building, the charge for the move will be an amount equal to one-half of the nonrecurring charge for the service termination affected. There will be no change in the minimum period requirements.

B. Moves to a Different Building (T)

Moves to a different building will be treated as a discontinuance and start of service and all associated nonrecurring charges will apply. New minimum period requirements will be established for the moved services. The customer will also remain responsible for satisfying all outstanding minimum period charges for the discontinued service. Moves to a different building for FRS customers may be eligible for portability, as described in 8.3.4.F., following. (T)

As of May 29, 1995 moves to a different building with an upgrade in transmission (T) speed for customers subscribing to pricing plans in this Section will be subject to the Termination Liability and Waiver Plan as set forth in 8.1.5. FRS customers (T) who subscribe to Pricing Plans in effective as of November 14, 1994 and who move to a different building, may be eligible for the phased-in installation rates and charges regulations as set forth in 8.3.4.B., following. (T)(M)

Certain material on this page formerly appeared on Page 8-45.
Certain material previously found on this page can now be found on Page 8-41.

8. ADVANCED COMMUNICATIONS NETWORKS

8.1 GENERAL (Cont'd)

8.1.4 CHANGES OF SERVICE

The following rearrangements and changes apply to Frame Relay Service (FRS), *QWEST DSL* Service, and ATM Cell Relay Service (ATM CRS). (T)

A. Service Rearrangements

Service rearrangements are changes to existing service which do not result in a change in the physical location of the network interface. Changes in the physical location of the network interface are treated as moves as described in 8.3.2.A.

1. For additions to existing service, nonrecurring charges associated with the added service element will apply.

2. Related monthly rates and nonrecurring charges for addition(s) to service are the rates and charges in effect at the time of the addition(s).

3. With the exception of PVCs, VCCs, and VPCs, an addendum to the existing fixed period plan is required when service elements are added to an existing fixed period plan. PVCs, VCCs, and VPCs may be added to existing fixed period plans on a month-to-month basis without an addendum to the existing fixed period plan.

4. When PVCs are added to an existing FRS, or VCCs or VPCs are added to an existing ATM CRS, the minimum period is one month.

5. A subsequent PVC, VCC or VPC order charge, as set forth in 8.3.2.A. and 8.5.2.A. will apply to add or change PVC, VCC or VPC assignments.

8. ADVANCED COMMUNICATIONS NETWORKS

8.1 GENERAL
8.1.4 CHANGES OF SERVICE (Cont'd)

B. Administrative Changes

Administrative changes to existing service will be made without charge(s) to the customer. Administrative changes are as follows:

- Change of customer name; i.e., the customer of record does not change but rather the customer of record changes its name; e.g., XYZ Company to XYZ Communications,
- Change of customer premises address when the change of address is not a result of a physical relocation of facilities,
- Change in billing data (name, address, or contact name or telephone number),
- Change of customer contact name or telephone number,
- Change of customer service element identification, and
- Change in jurisdiction for FRS, *QWEST DSL* Service and ATM Cell Relay Service. (T)

8. ADVANCED COMMUNICATIONS NETWORKS

8.1 GENERAL (Cont'd) (T)(M)

8.1.5 TERMINATION LIABILITY AND WAIVER POLICY (T)

A. General

Termination Liability and Waiver Policy provides the terms and conditions for customers subscribing to Pricing Plans as set forth in each Pricing Plan. As of (T)
May 29, 1995 new customers subscribing to ACS Pricing Plans are subject to the (T)
Termination Liability and Waiver Policy terms and conditions in lieu of the Discontinuance Charges, Portability (except for FRS Portability without upgrade in transmission speed, as set forth in 8.3.4.F.) and Upgrades in Service and (T)
Transmission Speed as set forth in the Pricing Plans. Customers with Pricing Plans in service prior to May 29, 1995 may utilize the terms and conditions of their (T)
pricing plans and portability or the Termination Liability and Waiver Policy. This offer is valid until either the expiration date of their existing term or until the expiration of the respective terms, as set forth in the pricing plans, whichever comes first.

If the customer chooses to discontinue all or a portion of the service prior to the expiration of the fixed period, termination charges, as set forth in B., following, will apply. (M)

Certain material on this page formerly appeared on Page 8-103.
Certain material previously found on this page can now be found on Page 8-44.

8. ADVANCED COMMUNICATIONS NETWORKS

8.1 GENERAL
8.1.5 TERMINATION LIABILITY AND WAIVER POLICY (Cont'd)

B. Termination Liability

Customers with Pricing Plans in service prior to August 12, 1997, will retain a Termination Liability of 15% and the minimum billing level requirement of 80% of the total monthly rates for the service, until the expiration of their existing fixed period.

If a customer chooses to discontinue the entire service or a portion of the service prior to the expiration of the fixed period service, termination charges apply (unless the customer satisfies the conditions specified in the Waiver Policy as set forth in C., following).

The minimum billing level is used to calculate the termination charge. The minimum billing level for Packet Switching, MAS, *QWEST DSL* Service (i.e., *QWEST DSL*, *QWEST IDSL* or *QWEST DSL HOST*) and LSS is 100% of the total monthly rates for the rate elements being discontinued. An exception for *QWEST IDSL* exists when this service is upgraded to *QWEST DSL* at the same address of record, the termination charge does not apply. The minimum billing levels for Frame Relay and ATM Cell Relay Service are as follows: (T) (T)

1. Frame Relay

a. Standard Minimum Billing Level

The Standard Minimum Billing Level (SMBL) for Frame Relay is 100% of the monthly rates for the rate elements being discontinued, except for the FRS User-To-Network Information Transfer (UNIT) or Network-To-Network Information Transfer (NNIT). The minimum billing level for the UNIT or NNIT is 100% of the monthly rate for a UNIT or NNIT with 1 PVC, based on the customer's existing fixed period service rate plan and the speed of the associated UNIT or NNIT.

8. ADVANCED COMMUNICATIONS NETWORKS

8.1 GENERAL (T)(M)

8.1.5 TERMINATION LIABILITY AND WAIVER POLICY (T)

B.1. (Cont'd)

b. Optional Minimum Billing Level

The Optional Minimum Billing Level (OMBL) for Frame Relay Service (FRS) is a plan that gives eligible customers the flexibility to remove and add circuits within Company territory without incurring a Termination Liability Assessment (TLA) as long as they stay at or above their TLA threshold level. Eligible customers who subscribe to this option must designate at the time they subscribe to a fixed period service rate plan which of their FRS recurring revenue will be part of OMBL and which will remain on SMBL. As new FRS is installed, the customer must determine whether to include the new service in the OMBL or SMBL.

A customer may have two or more OMBL fixed period service rate plans in effect at the same time.

- Eligibility Requirements:

  - Must have an annual projected FRS revenue of $100,000 or more that will be committed to each OMBL fixed period service rate plan at the time it is established. Determination of the revenue commitment for the first year will be calculated by multiplying the customer's current month FRS revenue by 12.

  - Must subscribe to a fixed period service rate plan of 36 months or greater for the OMBL FRS and its designated circuits. (M)

Certain material on this page formerly appeared on Page 8-105.
Certain material previously found on this page can now be found on Page 8-46.

8. ADVANCED COMMUNICATIONS NETWORKS

8.1 GENERAL (T)(M)

8.1.5 TERMINATION LIABILITY AND WAIVER POLICY

B.1.b. (Cont'd) (T)

- Terms and Conditions:

  - Only FRS recurring (whole and partial month) revenues and associated adjustments of these amounts will be used to calculate the annual revenue commitment.

  - The FRS Minimum Service Period (MSP) as set forth in 8.3.4.B., preceding, applies. The MSP starts with the installation date of each circuit. Should the customer disconnect the circuit prior to the completion of the MSP of six months (PVCs excepted), TLA will apply to the months remaining in the MSP. TLA will not apply beyond the initial six month period. (T) (T) (T)

  - All new circuits added will be co-terminous with the termination date of the OMBL fixed period service rate plan with which they are associated. (M)

Certain material on this page formerly appeared on Page 8-105.
Certain material previously found on this page can now be found on Page 8-47.

8. ADVANCED COMMUNICATIONS NETWORKS

8.1 RATE REGULATIONS (T)(M)

8.1.5 TERMINATION LIABILITY AND WAIVER POLICY

B.1.b. (Cont'd) (T)

- TLA Threshold

  The threshold amount will be determined as follows:

  - In the first year of the fixed period service rate plan, the threshold will be 80% of the customer's revenue commitment at the time the OMBL fixed period service rate plan is established.

  - For subsequent years of the fixed period service rate plan, the threshold level will be 80% of the previous year's actual revenue, or the threshold of the previous year, whichever is greater.

  - For any year the customer's actual revenue falls below the threshold the TLA threshold for the next year will become 80% of the previous year's actual revenue.

- Annual Verification

  The OMBL will be validated annually on the anniversary of its establishment date. When the customer's annual revenue exceeds their threshold TLA will (T)
  not be assessed. When the customer's annual revenue falls below their threshold, a Shortfall Calculation will be made as follows. (M)

Certain material on this page formerly appeared on Page 8-106.
Certain material previously found on this page can now be found on Page 8-49.

8. ADVANCED COMMUNICATIONS NETWORKS

8.1 RATE REGULATIONS (T)(M)

8.1.5 TERMINATION LIABILITY AND WAIVER POLICY

B.1.b. (Cont'd) (T)

- Shortfall Calculation

  In the event the customer's annual revenue falls below the threshold then a TLA will be calculated as follows:

  - (25%) x (Revenue Shortfall (TLA threshold – actual revenue)) x (number of years remaining in the fixed period service rate plan).

  - Example: Assume a customer has an annual revenue commitment of $200,000 and a corresponding TLA threshold of $160,000 (80% of the annual revenue commitment). The OMBL recurring FRS revenue billed for the 3rd year of a 60 month fixed period service rate plan is $140,000. The TLA would be calculated as follows:

    (25%) x ($20,000 ($160,000 - $140,000)) x (2) = $10,000

    In addition, the TLA threshold for year 4 would be adjusted downward from $160,000 (80% of $200,000) to $112,000 (80% of $140,000). (M)

Certain material on this page formerly appeared on Page 8-107.
Certain material previously found on this page can now be found on Page 8-48.

8. ADVANCED COMMUNICATIONS NETWORKS

8.1 RATE REGULATIONS

8.1.5 TERMINATION LIABILITY AND WAIVER POLICY

B. Termination Liability (Cont'd)

2. Minimum Billing Level for ATM Cell Relay Service

The minimum billing level for ATM Cell Relay Service is 100% of the monthly rates for the rate elements being discontinued, except the Cell Transfer service elements. The minimum billing level for the Cell Transfer service elements is 100% of the Cell Transfer Fixed monthly rate, plus the monthly rate for a PCRS, SCRS or UBRS Incremental Cell Transfer of 64 kbps on a 1.544 Mbps port, based on the customer's existing Pricing Plan term and the speed of the associated Cell Transfer; or the monthly rate for a PCRS, SCRS or UBRS Incremental Cell Transfer of 5 Mbps of bandwidth on a 45 Mbps port, based on the customer's existing Pricing Plan term and the speed of the associated Cell Transfer; or the monthly rate for a PCRS, SCRS or UBRS Cell Rate of 15 Mbps of bandwidth on a 155 Mbps port, based on the customer's existing Pricing Plan term and the speed of the associated Cell Transfer.

Should the customer choose to discontinue fixed period service prior to completion of the minimum service period, termination charges will apply. The termination charge is 100% of the minimum billing level for the remaining months of the minimum service period, plus 15% for Public Packet Switching, or 25% for Frame Relay, or 40% for ATM CRS, *QWEST DSL* Service, LSS and MAS of the (T)
remaining portion of the fixed period service. Should the customer choose to discontinue fixed period service after the completion of the minimum period, termination charges equal to 15% for Public Packet Switching, 25% for Frame Relay, or 40% for ATM CRS, *QWEST DSL* Service, LSS and MAS of the (T)
minimum billing level for the remaining portion of the fixed period service will apply. For example, if a Frame Relay customer discontinues a service including the Access Link after completing 17 months of a 36-month term, the termination charge will be the minimum billing level for the service, multiplied by 25%, multiplied by 19 months.

8. ADVANCED COMMUNICATIONS NETWORKS

8.1 RATE REGULATIONS
8.1.5 TERMINATION LIABILITY AND WAIVER POLICY

B. Termination Liability

3. *QWEST DSL* Volume Plan

a. Basic Discount Option

The *QWEST DSL HOST* customer(s) must commit to acquiring a minimum of 15,000 active and billable *QWEST DSL* lines by the end of the 12th month of their 36 month Fixed Period Service Rate Plan. If the customer does not have a minimum of 15,000 active and billable *QWEST DSL* lines by the end of the initial 12 month period, the Company will terminate the Plan.

In the event the Company terminates the Basic Discount Option, any new orders for *QWEST DSL* Service lines placed by the customer will be charged the current month-to-month Tariff rates for the respective *QWEST DSL* Service requested. Following termination, the Company will bill 100% of the total accumulated discount credited to the customer plus a 10% surcharge.

b. Volume Commitment Options (T)

(1) Volume Commitment Option I (T)

The *QWEST DSL HOST* customer(s) must commit to having a designated number, between 60,001 and 400,000 of active or billable *QWEST DSL* lines by the end of their 36 month Fixed Period Service Rate Plan. The customer must acquire at least 25% of the total committed lines by the end of the first 12 months, 60% of the total committed lines by the end of 24 months, and 100% of the committed lines by the end of their 36 month Fixed Period Service Rate Plan.

- Annual Verification

The Company will annually review the number of active or billable *QWEST DSL* lines to determine whether or not the customer has reached their commitment level for that respective year as determined above. If the customer fails to meet the committed number of active or billable lines, the Company will adjust their billing as follows:

8. ADVANCED COMMUNICATIONS NETWORKS

8.1 RATE REGULATIONS

8.1.5 TERMINATION LIABILITY AND WAIVER POLICY

B. Termination Liability

3.b.(1) (Cont'd) (T)

- Shortfall Calculation

The customer will be billed 100% of the total accumulated discount credited plus a 10% surcharge for the year reviewed. The customer will be moved to the Basic Discount Option for the subsequent year at the appropriate percentage determined by the discount table as set forth in 8.4.5.B., following. If the 15,000 line minimum level has not been met then the customer's bill will be adjusted as set forth in 8.1.5.B.3.a., preceding.

Example: A customer has chosen the Volume Commitment Option and has committed to 100,000 lines over the 36 month Fixed Period Service Rate Plan, entitling the customer to a 14% discount on the active month-to-month *QWEST DSL* lines. The commitment would require the customer to have 25,000 active and billable lines at the end of 12 months, 60,000 active and billable lines at the end of 24 months and 100,000 lines active and billable at the end of the 36 month Fixed Period Service Rate Plan.

8. ADVANCED COMMUNICATIONS NETWORKS

8.1 RATE REGULATIONS
8.1.5 TERMINATION LIABILITY AND WAIVER POLICY

B. Termination Liability

3.b.(1) (Cont'd) (T)

- The customer has 22,000 *QWEST DSL DELUXE* lines active and billable at the 12 month review. The customer has not reached the 25,000 line requirement, so they would be moved to the Basic Discount Option at a 12% discount for the subsequent year in lieu of the 14% discount associated with the 100,000 *QWEST DSL* Volume Commitment. The adjustment for month 12 would be calculated as follows: (C)

  14% of (22,000 lines X $29.95 each = $658,900) = $92,246 (T)
  $92,246 + $9,225 (10% Surcharge) =
  $101,471 for month 12 (C)

  The above calculation would need to be applied to each of the previous 11 months and totaled with the 12th month to reach the annual adjustment. (C)

- The customer has 27,000 *QWEST DSL DELUXE* lines active and billable at the 12 month review, but at the 24 month review has 57,000 active and billable lines. The first year would receive the 14% discount since the 25 % commitment level was reached. However, at the end of the 24 month review the customer would be moved to the Basic Discount Option at a 13% discount for the subsequent year in lieu of the 14 % discount associated with the 100,000 *QWEST DSL* Volume Commitment. The adjustment is only for the lines installed during the 2nd year and would be calculated as follows:

  14% of (30,000 lines X $29.95 each = $898,500) = $125,790 (T)
  $125,790 + $12,579 (10% Surcharge) =
  $138,369 addition to the second year's billing

8. ADVANCED COMMUNICATIONS NETWORKS

8.1 RATE REGULATIONS
8.1.5 TERMINATION LIABILITY AND WAIVER POLICY

B. Termination Liability

3.b. (Cont'd)

(2) Volume Commitment Option II (N)

The *QWEST DSL* Volume Plan customer(s) must commit to having a designated number of active or billable *QWEST DSL* lines comprised of *QWEST DSL 256*, *QWEST DSL SELECT* and/or *QWEST DSL DELUXE* Services, as set forth below. This Volume Commitment Option II is only available on a 5-year Fixed Period Service Rate Plan. The customer must acquire a minimum of 150,000 active and billable *QWEST DSL* lines at any time during the first year of their 5-year Fixed Period Service Rate Plan. If the customer acquires the minimum of active and billable *QWEST DSL* lines at any time during the first year, there is no minimum requirement for the second year of the Fixed Period Service Rate Plan. The customer must acquire at least 200,001 active and billable *QWEST DSL* lines as of the end of the third, fourth and fifth years.

- Annual Verification

The Company will annually review the number of active or billable *QWEST DSL* lines to determine whether or not the customer has reached their commitment level for that respective year as determined above. If the customer fails to meet the committed number of active or billable lines, the Company will adjust their billing as follows: (N)

8. ADVANCED COMMUNICATIONS NETWORKS

8.1 RATE REGULATIONS
8.1.5 TERMINATION LIABILITY AND WAIVER POLICY

B. Termination Liability
3.b.(2) (Cont'd)

- Shortfall Calculation (N)

If the customer falls short of their yearly commitment level (150,000 lines by the end of the first year, 200,001 lines as of the end of the third, fourth and fifth years), the customer shall pay an amount equal to the difference between the customer's applicable DSL commitment level and the customer's actual DSL lines multiplied by the applicable monthly rate times 12.

Example: If the customer's active and billable actual DSL lines at the Annual Verification total 195,000, 5,001 short of the 200,001 commitment level, the Shortfall Calculation will be calculated as follows:

Commitment Level of 200,001 lines minus 195,000 (actual lines) = 5,001 line shortfall. Volume Commitment Option II rate (e.g., $24.86, *QWEST DSL DELUXE* monthly rate, or the customer's *QWEST DSL DELUXE* Fixed Period Service Rate minus 17%). 5,001 (Line Shortfall) X $24.86 X 12 = $1,491,898.32 Shortfall charge. (N)

8. ADVANCED COMMUNICATIONS NETWORKS

8.1 RATE REGULATIONS
8.1.5 TERMINATION LIABILITY AND WAIVER POLICY

B. Termination Liability
3.b. (Cont'd)

(3) Volume Commitment Option III (N)

The *QWEST DSL* Volume Plan customer(s) must commit to having a designated number of active or billable *QWEST DSL* lines comprised of *QWEST DSL DELUXE* Service, as set forth below. This Volume Commitment Option III is only available on a 5-year Fixed Period Service Rate Plan. The customer must acquire a minimum of active and billable *QWEST DSL* lines as follows to be eligible for the Volume Commitment Option III:

- 120,000 lines by the end of 18 months
- 260,000 lines by the end of 30 months
- 400,000 lines by the end of 42 months
- 500,000 lines by the end of 54 months

• Annual Verification

The Company will annually review the number of active or billable *QWEST DSL* lines to determine whether or not the customer has reached their commitment level for that respective year as determined above. Should the customer not reach the commitment level, they shall have an additional 180 days to make up the shortfall. If the customer fails to meet the committed number of active or billable lines within the additional 180 days, the Company will adjust their billing as follows: (N)

8. ADVANCED COMMUNICATIONS NETWORKS

8.1 RATE REGULATIONS
8.1.5 TERMINATION LIABILITY AND WAIVER POLICY

B. Termination Liability
3.b.(3) (Cont'd)

- Shortfall Calculation (N)

If the customer falls short of their yearly commitment levels, the customer shall pay an amount equal to the difference between the customer's applicable DSL commitment level and the customer's actual DSL lines multiplied by the applicable monthly rate times 6. Any lines associated with a shortfall charges shall be recognized for future year(s) commitment levels.

Example: If the customer's active and billable actual DSL lines at the Annual Verification for 30 months, total 195,000, 65,000 short of the 260,000 commitment level, the Shortfall Calculation will be calculated as follows:

Commitment Level of 260,000 lines minus 195,000 (actual lines) = 65,000 line shortfall. Volume Commitment Option III rate (e.g., $29.95 DSL monthly rate with 24.9% Discount = $22.49). The formula is as follows: Volume Commitment Rate X 65,000 (Line Shortfall) X 6 = $8,771,100 Shortfall charge. (N)

1801 California Street, Denver, Colorado 80202

8. ADVANCED COMMUNICATIONS NETWORKS

8.1 GENERAL (T)(M)
8.1.5 TERMINATION LIABILITY AND WAIVER POLICY (Cont'd) (T)

C. Waiver Policy

A waiver of the termination charge as set forth in B., preceding, may occur if the customer moves to a different building within the Company territory or migrates to another Company service or transmission speed (e.g., 56 kbps FRS to 1.544 Mbps FRS, or changes in the Access Link, UNIT or NNIT transmission speeds) provided all of the following conditions are met:

- The customer must agree to a new pricing plan for the new service, except for FRS as set forth following and in 8.3.4.B.; (T)
- The customer must satisfy the minimum service period requirement--should the customer choose to discontinue fixed period service prior to completion of the minimum service period, termination charges, as is set forth in B., preceding, will apply; (T)
- The total value of the new service must be equal to or greater than 115% the remaining value of the existing pricing plan service (nonrecurring charges and Special Construction charges will not be used towards the Waiver calculation); (T)
- The order to disconnect the existing service and the order for the new service are received by the Company at the same time and both orders must reference the application of the waiver policy; (T)
- The new service due date must be within 30 days of the due date of the disconnection of the old service, unless the installation is delayed due to Company reasons; (T)
- New minimum service period applies to the new service, except as set forth in 8.3.4.B., following. (T)
- The customer agrees to pay all outstanding recurring and nonrecurring charges (these charges will not be included in the new service pricing plan); and (T)
- Applicable nonrecurring charges apply and are the charges in effect at the time the service is changed, except as set forth in 8.3.4. (T) (T)(M)

Certain material on this page formerly appeared on Page 8-109.
Certain material previously found on this page can now be found on Page 8-75.

8. ADVANCED COMMUNICATIONS NETWORKS

8.1 GENERAL (T)(M)
8.1.5 TERMINATION LIABILITY AND WAIVER POLICY (Cont'd) (T)

D. Nonappropriations Clause

Termination Liability and Waiver Policy does not apply to ACS Pricing Plan services purchased by local, State or Federal government entities (or to customers who have purchased services solely for resale to local, State or Federal government entities) when they are discontinued prior to the completion of the fixed period service only when all of the following conditions are met:

- The service(s) purchased by the local, State or Federal government entity or by customers that have purchased services for resale to local, State or Federal government entities are utilized solely for provision of services for that local, State or Federal government entity,

- Funding for the fixed period service ordered by the authorized local, State or Federal government entity is included in the budget request for each fiscal period appropriation sufficient to cover the authorized local, State or Federal government entity's obligations under the fixed period service for that fiscal period,

- Nonappropriation may not be used as a means of terminating the service to acquire a functionally similar product or service,

- The local, State or Federal government entity ordered the fixed period service under the good faith belief that moneys in amounts sufficient to discharge its obligations could and would lawfully be appropriated and be made available for this purpose and, (M)

Certain material on this page formerly appeared on Page 8-110.
Certain material previously found on this page can now be found on Page 8-76.

8. ADVANCED COMMUNICATIONS NETWORKS

8.1 GENERAL (T)(M)

8.1.5 TERMINATION LIABILITY AND WAIVER POLICY (T)

D. Nonappropriations Clause (Cont'd)

- The local, State or Federal government entity or the customer who ordered the service on their behalf, must provide the Company notarized documents agreed upon by both the Company and the customer, showing that the entity is allotted insufficient funds for the remainder of the then current fiscal period (or for a succeeding fiscal period) by appropriation, appropriation limitation or grant to continue payments under the fixed period service and has no other funding source lawfully available to it for such purpose. (T)

  The fixed period service may be terminated by giving the Company not less than 30 days written notice. Should the customer receive funding for the cancelled service prior to physical disconnect of service, the customer may cancel the disconnect order per Section 5. Upon termination, the local, State or Federal government entity or the customer who ordered the service on their behalf, shall pay all applicable rates and nonrecurring charges of the fixed period service incurred through the date of termination and through the end of the then current fiscal period to the extent of lawfully available funds. (T) (T) (M)

Certain material on this page formerly appeared on Page 8-111.
Certain material previously found on this page can now be found on Page 8-77.

8. ADVANCED COMMUNICATIONS NETWORKS

8.1 GENERAL (Cont'd)

8.1.6 SPREAD OF NONRECURRING CHARGES

A. Frame Relay Service, *QWEST DSL* Service, ATM Cell Relay Service and LSS (T)

At the customer's request, nonrecurring charges for FRS, *QWEST DSL* Service, ATM Cell Relay Service and/or LSS provided under the Pricing Plan may be amortized over the term of the fixed period and billed monthly. Nonrecurring charges billed in this manner (i.e., as an annuity), shall be subject to interest charges which the Company will include in each monthly installment. (T)

The Company will calculate the monthly annuity, including principal and interest, using the following Annuity from a Present Amount formula:

$$\text{Monthly Annuity} = (\text{Nonrecurring Charge}) \quad \frac{\frac{i}{12}\left(1+\frac{i}{12}\right)^{n}}{\left(1+\frac{i}{12}\right)^{n}-1}$$

In the above formula, the variable "i" is the Company's Pretax Incremental Cost of Capital rate in effect when the monthly annuity amount is calculated. The variable "n" (an exponent) is the term of the fixed period in months.

8. ADVANCED COMMUNICATIONS NETWORKS

8.1 GENERAL

8.1.6 SPREAD OF NONRECURRING CHARGES

A. Frame Relay Service, *QWEST DSL* Service, ATM Cell Relay Service and LSS (Cont'd) (T)

If the customer discontinues FRS, ATM Cell Relay Service and/or LSS, changes to a lower speed service, moves or upgrades service, prior to the completion of the fixed period, the total remaining unpaid monthly annuity payments for the recovery of the nonrecurring charge must be paid immediately as a one-time charge. The Company will calculate this one-time charge using the following Present Value of an Annuity formula:

$$\text{One-time Charge} = (\text{Monthly Annuity})\ \frac{\left(1+\frac{i}{12}\right)^{n}-1}{\frac{i}{12}\left(1+\frac{i}{12}\right)^{n}}$$

In the formula directly above, the variable "i" is the Company's Pretax Incremental Cost of Capital in effect when the one-time charge amount is calculated. The variable "n" (an exponent) is the total number of remaining unpaid monthly annuity payments.

8. ADVANCED COMMUNICATIONS NETWORKS

8.1 GENERAL (Cont'd) (T)(M)

8.1.7 PREPAYMENT DISCOUNT (T)

A. Frame Relay Service, ATM Cell Relay Service and LSS

At the customer's request, recurring rates for FRS, ATM Cell Relay Service and/or LSS provided under a Pricing Plan may be prepaid in whole or in part. The Company will calculate the prepayment amount using the following Present Value of an Annuity formula:

$$\text{Prepayment} = (\text{Recurring Rate}) \quad \frac{\left(1+\frac{i}{12}\right)^{n}-1}{\frac{i}{12}\left(1+\frac{i}{12}\right)^{n}}$$

In the above formula, the variable "i" is equal to the Treasury rate plus a prepayment premium expressed as an Annual Percentage Rate (APR). The variable "n" (an exponent) is a fixed period in months for which the customer requests to prepay the recurring rate in whole or in part.

If the customer discontinues the prepaid service in whole or in part prior prior to the expiration of the original fixed period, the Company will calculate the Present Value of an Annuity refund amount by using the same rate at which the prepayment was initially calculated. From this credit, Termination Liability charges as specified in 8.1.5, preceding, are subtracted. If a credit balance remains, the Company will return it to the customer. (T) (M)

Certain material on this page formerly appeared on Page 8-114.
Certain material previously found on this page can now be found on Page 8-80.

8. ADVANCED COMMUNICATIONS NETWORKS

8.1 GENERAL (Cont'd) (T)(M)

8.1.8 PROMOTIONS

A. FRS Pricing Plan Promotion 1 - September 29, 1998 and October 31, 1998 (T)

The Company will offer the following promotional incentive for customers who subscribe to this promotion between September 29, 1998 and October 31, 1998. Specifically, the Company will provide a coupon for a 1-time credit equal to 1 (T) month's billing of the customer's FRS Pricing Plan Access Link, User-To-Network Information Transfer (UNIT), Network-to-Network Information Transfer (NNIT), and Transport Channel rate elements. The coupon will be issued to the customer once the requested service is installed. The customer may redeem the coupon at anytime before its expiration date (i.e., 10 months from issuance). Customers who (T) redeem the coupon will receive the one-time credit on the 12th full billing month (T) of the customer's VTPP fixed period.

In order to qualify for this promotion, the customer must order a new FRS Pricing Plan with a fixed period of 12, 24, 36, 60, 72, or 84 months. For FRS 2-Wire 128 (T) kbps only, the customer must order a new FRS Pricing Plan with a fixed period of 12, 36 or 60 months. The coupon is not redeemable if the service is disconnected (T) before the 12th month. (T)

The Company will offer a Service Date based on the type and quantity of Access Services the customer has requested as set forth in 5.2.1 and 8.1.2, preceding. (M)

Certain material on this page formerly appeared on Page 8-82.
Certain material previously found on this page can now be found on Page 8-81.

8. ADVANCED COMMUNICATIONS NETWORKS

8.1 GENERAL (T)(M)
8.1.8 PROMOTIONS (Cont'd)

B. FRS Pricing Plan Promotion 2 - January 5, 1999 through March 31, 1999 (T)

For a limited time only, the nonrecurring charges for FRS will be waived for customers who install new service and subscribe to a 24-month or greater Pricing Plan; or for existing FRS Pricing Plan customers who install service at a new customer premises or location and subscribe to a 24-month or greater Pricing Plan; or for existing FRS customers who upgrade from a monthly or a 12-month Pricing Plan to a 24-month or greater Pricing Plan. Order applications must be placed from January 5, 1999 through March 31, 1999, with order completion within 60 days of the order application date. The order application date is the date the service is ordered. When order completion is delayed due to Company reasons, the order completion date will be extended. Termination Liability or Discontinuance Charges will not apply. (T) (T) (T)

Exclusions to the above promotion are:

1. Moves of existing services within the same building or to a different building. (T)

2. Customer Network Management (CNM) (T)

3. Each additional PVC charge associated with existing service pointing to an existing location. (T)

4. Subsequent PVC(s) order charge associated with existing service pointing to an existing location. (T) (M)

Certain material on this page formerly appeared on Page 8-83.
Certain material previously found on this page can now be found on Page 8-82.

8. ADVANCED COMMUNICATIONS NETWORKS

8.1 GENERAL (S-y)
8.1.8 PROMOTIONS (Cont'd) (S-y)

C. FRS and ATM Pricing Plan Promotion – January 15, 2001 through April 11, 2001 (N)

For a limited time only, 100% of the nonrecurring charges for FRS (with the exception of 56 kbps) and ATM will be waived for customers who install new service and subscribe to a 12-month, 24-month, 36-month, 48-month, 60-month, 72-month or 84-month Pricing Plan, or for existing FRS (with the exception of 56 kbps) and ATM Pricing Plan customers who install service at a new customer premises or location and subscribe to a 12-month, 24-month, 36-month, 48-month, 60-month, 72-month or 84-month Pricing Plan; or for existing FRS (with the exception of 56 kbps) and ATM customers who upgrade from a monthly, 12-month, 24-month, 36-month, 48-month, 60-month, or 72-month Pricing Plan to a new fixed period Pricing Plan.

Customer orders must be placed from January 15, 2001 through April 11, 2001, with order completion within 120 days of the order date. When order completion is delayed due to Company reasons, the order completion date will be extended. Termination Liability or Discontinuance Charges will not apply.

Exclusions to the above promotion are the following:

- FRS 56 kbps
- Moves of existing services within the same building or to a different building
- Customer Network Management (CNM)
- Additional PVC, VCC or VPC charges associated with existing service pointing to an existing or new location.
- Subsequent PVC(s), VCC(s) or VPC(s) order charges associated with existing service pointing to an existing or new location.
- Changes in CIR for FRS
- Transport Channel and Transport Mileage
- Services from Sections 7, 13 and 15 (N)

(y) Reissued material filed under Transmittal No. 28 effective December 6, 2000.

8. ADVANCED COMMUNICATIONS NETWORKS

8.1 GENERAL (T)(M)
8.1.8 PROMOTIONS (Cont'd)

D. FRS, ATM and LSS Pricing Plan Promotion 4 – July 10, 2000 through October 4, 2000 (T)

LSS and FRS 2-Wire 128 kbps do not offer 24-month, 48-month, 72-month or 84-month Pricing Plans. (T) (T)

For a limited time only, 50% of the nonrecurring charges for FRS (with the exception of 56 kbps), ATM and LSS will be waived for customers who install new service and subscribe to a 36-month or 48-month Pricing Plan, or for existing FRS (with the exception of 56 kbps), ATM, and LSS Pricing Plan customers who install service at a new customer premises or location and subscribe to a 36-month or 48-month Pricing Plan; or for existing FRS (with the exception of 56 kbps), ATM and LSS customers who upgrade from a monthly, 12-month or 24-month Pricing Plan to a 36-month or 48-month Pricing Plan. (T) (T) (T)

And 100% of the nonrecurring charges for FRS(with the exception of 56 kbps), ATM and LSS will be waived for customers who install new service and subscribe to a 60-month, 72-month or 84-month Pricing Plan, or for existing FRS (with the exception of 56 kbps), ATM and LSS Pricing Plan customers who install service at a new customer premises or location and subscribe to a 60-month, 72-month or 84-month Pricing Plan; or for existing FRS (with the exception of 56 kbps), ATM and LSS customers who upgrade from a monthly, 12-month, 24-month, 36-month or 48-month Pricing Plan to a 60-month, 72-month or 84-month Pricing Plan. (T) (T) (T) (T)(M)

Certain material on this page formerly appeared on Page 8-85.
Certain material previously found on this page can now be found on Page 8-84.

8. ADVANCED COMMUNICATIONS NETWORKS

8.1 GENERAL (T)(M)

8.1.8 PROMOTIONS

D. FRS, ATM and LSS Pricing Plan Promotion 4 – July 10, 2000 through October 4, 2000 (Cont'd) (T)

Customer orders must be placed from July 10, 2000 through October 4, 2000, with order completion within 120 days of the order date. When order completion is delayed due to Company reasons, the order completion date will be extended. Termination Liability or Discontinuance Charges will not apply.

Exclusions to this promotion are: (T)

- FRS 56 kbps
- Moves of existing services within the same building or to a different building
- Customer Network Management (CNM)
- Additional PVC, VCC or VPC charges associated with existing service pointing to an existing or new location.
- Subsequent PVC(s), VCC(s) or VPC(s) order charges associated with existing service pointing to an existing or new location.
- Changes in CIR for FRS
- Transport Channel and Transport Mileage (M)

Certain material on this page formerly appeared on Page 8-85.
Certain material previously found on this page can now be found on Page 8-86.

8. ADVANCED COMMUNICATIONS NETWORKS

8.1 GENERAL (T)(M)
8.1.8 PROMOTIONS (Cont'd)

E. FRS Promotion 5 – October 2, 2000 through December 27, 2000 (T)

For a limited time only, FRS customers who currently subscribe to Pricing Plans that will expire between October 1, 2000 and March 31, 2001 will receive 2 or 3 months recurring credit if they renew their FRS Pricing Plan for 36 months or longer. If the service is renewed for 36 or 48 months then a 2-month credit will (T) be applied to the customer's first 2 bills. If the service is renewed for 60 months or longer then a 3-month credit will be applied to their first 3 bills. This plan may (T) not be combined with any other promotion and will not include credit for Transport Mileage and Private Line Transport Services recurring rates used as Access Links.

Customer orders must be placed from October 2, 2000 through December 27, 2000, with order completion within 120 days of the order date. When order completion is delayed due to Company reasons, the order completion date will be extended. Termination Liability or Discontinuance Charges will not apply. (M)

Certain material on this page formerly appeared on Page 8-85.1.
Certain material previously found on this page can now be found on Pages 8-288 and 8-289.

8. ADVANCED COMMUNICATIONS NETWORKS

8.1 GENERAL
8.1.8 PROMOTIONS (Cont'd)

F. *QWEST DSL HOST* Service Pricing Plan Promotion 1 - April 1, 1999 through May 28, 1999. (T)

For a limited time only, the nonrecurring charges for *QWEST DSL HOST* Service Ports will be waived for customers who install new service and subscribe to a 12-month or greater Pricing Plan; or for existing *QWEST DSL HOST* Service Pricing Plan customers who install service at a new customer premises or location and subscribe to a 12-month or greater Pricing Plan. Order applications must be placed from April 1, 1999 through May 28, 1999, with order completion within 60 days of the order application date. The order application date is the date the service is ordered. When order completion is delayed due to Company reasons, the order completion date will be extended. Termination Liability or Discontinuance Charges will not apply. (T) (T)

An exclusion to the above promotion is:

1. Moves of existing services within the same building or to a different building.

G. *QWEST DSL* Service Pricing Plan Promotion 2 – June 28, 1999 through August 20, 1999. (T)

For a limited time only, the Company will provide a $100.00 check to new customers who subscribe to *QWEST DSL* Service with a 36-month or greater Pricing Plan or to existing customers who order an additional *QWEST DSL* Service with a 36-month or greater Pricing Plan. Order applications must be placed from June 28, 1999 through August 20, 1999. This promotional offering is only available once to a customer during the promotional period. (T) (T)

Once the customer's *QWEST DSL* Service has been installed, the Company will mail the customer an information form to verify the address for check issuance. The customer must return the information form to the Company within six weeks of its mailing in order to receive the check. Upon receipt of the completed information form, the Company will mail the check to the customer of record within four weeks. (T)

8. ADVANCED COMMUNICATIONS NETWORKS

8.1 GENERAL
8.1.8 PROMOTIONS (Cont'd)

H. *QWEST DSL* Service Promotion 3 – August 23, 1999 through October 30, 1999. (T)

For a limited time only, the nonrecurring charges for *QWEST DSL* Service will be (T)
waived for customers who install new service or for existing *QWEST DSL* Service (T)
customers who install service at a new customer premises or location. Order applications must be placed from August 23, 1999 through October 30, 1999, with order completion within 60 days of the order application date. The order application date is the date the service is ordered. When order completion is delayed due to Company reasons, the order completion date will be extended. This offering is not available with any other promotion.

8. ADVANCED COMMUNICATIONS NETWORKS

Certain material previously found on this page can now be found on Pages 8-292.

8. ADVANCED COMMUNICATIONS NETWORKS

8.1 GENERAL
8.1.8 PROMOTIONS (Cont'd)

I. *QWEST DSL* Service Promotion – January 3, 2001 through April 3, 2001. (C)

For a limited time only, the nonrecurring charges for *QWEST DSL* Service will be waived for customers who install new service or for existing *QWEST DSL* Service customers who install service at a new customer premises or location. Qualifying customers will receive a one-time credit equal to one month of the recurring charges on their first bill if the order application is placed from January 3, 2001 through February 2, 2001. In addition, qualifying customers will receive a one-time credit equal to two months of the recurring charges on their first bill if the order application is placed from February 3, 2001 through April 3, 2001. All (C)
orders must be completed within 60 days of the order application date, the date the (T)
service is ordered. When order completion is delayed due to Company reasons, the order completion date will be extended. This offering is not available with any other promotion.

8. ADVANCED COMMUNICATIONS NETWORKS

8.1 GENERAL
8.1.8 PROMOTIONS (Cont'd)

J. *QWEST DSL* Service Promotion 5 – January 4, 2000 through April 2, 2000. (T)

For a limited time only, the nonrecurring charges for *QWEST DSL* Service will be (T)
waived for customers who install new service or for existing *QWEST DSL* Service (T)
customers who install service at a new customer premises or location. Order applications must be placed from January 4, 2000 through April 2, 2000, with order completion within 60 days of the order application date. The order application date is the date the service is ordered. When order completion is delayed due to Company reasons, the order completion date will be extended. This offering is not available with any other promotion.

8. ADVANCED COMMUNICATIONS NETWORKS

8.1 GENERAL
8.1.8 PROMOTIONS (Cont'd)

K. *QWEST DSL* Service Promotion 6 – April 3, 2000 through July 1, 2000. (T)

The following promotional offering is available to new *QWEST DSL* Service customers and existing customers who install service at a new premises or location. Order applications must be placed from April 3, 2000 through July 1, 2000, with order completion within 60 days of the order application date. Qualifying customers will receive a 1-time credit equal to 2 months of the recurring charges on their first bill. This offering is not available with any other promotion. (T)

8. ADVANCED COMMUNICATIONS NETWORKS

8.1 GENERAL
8.1.8 PROMOTIONS (Cont'd)

L. *QWEST DSL* Service Promotion 7 – July 2, 2000 through September 29, 2000. (T)

For a limited time only, the nonrecurring charges for *QWEST DSL* Service will be waived for customers who install new service and subscribe to a 12-month, 36-month or 60-month Pricing Plan or for existing *QWEST DSL* Service customers who install service at a new customer premises or location and subscribe to a 12-month, 36-month or 60-month Pricing Plan. Order applications must be placed from July 2, 2000 through September 29, 2000, with order completion within 60 days of the order application date. The order application date is the date the service is ordered. When order completion is delayed due to Company reasons, the order completion date will be extended. This offering is not available with any other promotion. (T) (T)

8. ADVANCED COMMUNICATIONS NETWORKS

8.1 GENERAL
8.1.8 PROMOTIONS (Cont'd)

M. *QWEST DSL* Service Promotion 8 – September 2, 2000 through January 2, 2001. (T)

For a limited time only, the nonrecurring charges for *QWEST DSL* Service will be (T)
waived for customers who install new service or for existing *QWEST DSL* Service (T)
customers who install service at a new customer premises or location. In addition the Company will guarantee customer satisfaction by refunding any recurring charges accrued and waiving Termination Liability, if the customer cancels service within 30 days after installation due to dissatisfaction. Order applications must be placed from September 2, 2000 through January 2, 2001, with order completion within 60 days of the order application date. The order application date is the date the service is ordered. When order completion is delayed due to Company reasons, the order completion date will be extended. This offering is not available with any other promotion.

8. ADVANCED COMMUNICATIONS NETWORKS

Certain material previously found on this page can now be found on Page 8-300.

8. ADVANCED COMMUNICATIONS NETWORKS

8.1 GENERAL
8.1.8 PROMOTIONS (Cont'd)

N. *QWEST DSL HOST* Service Promotion – October 2, 2000 through December 29, 2000. (T)

For a limited time only, the nonrecurring Port charges for *QWEST DSL HOST* Service will be waived for customers who install new *QWEST DSL HOST* Ports for monthly, 12-, 36- or 60-month Pricing Plans. Order applications must be placed from October 2, 2000 through December 29, 2000, with order completion within 120 days of the order application date. The order application date is the date the service is ordered. When order completion is delayed due to Company reasons, the order completion date will be extended. This offering is not available with any other promotion. (T) (T)

8. ADVANCED COMMUNICATIONS NETWORKS

8.1 GENERAL
8.1.8 PROMOTIONS (Cont'd)

O. *QWEST IDSL* Service Promotion – October 2, 2000 through December 15, 2000. (T)

For a limited time only, the Company will waive $150.00 of the $250.00 *QWEST IDSL* Channel Termination nonrecurring charge for customers who subscribe to a new *QWEST IDSL* Channel Termination for monthly, 12-, 36- or 60-month Pricing Plans. Order applications must be placed from October 2, 2000 through December 15, 2000, with order completion within 60 days of the order application date. The order application date is the date the service is ordered. When order completion is delayed due to Company reasons, the order completion date will be extended. This offering is not available with any other promotion. (T) (T)

8. ADVANCED COMMUNICATIONS NETWORKS

8.1 GENERAL (T)(M)
8.1.8 PROMOTIONS (Cont'd)

P. ATM Cell Relay Service Pricing Plan Promotion 1 - September 29, 1998 through October 31, 1998 (T)

The Company will offer the following promotional incentive for customers who subscribe to this promotion between September 29, 1998 and October 31, 1998. Specifically, the Company will provide a coupon for a one-time credit equal to 1 month's billing of the customer's ATM Pricing Plan Optical Access Link, Fixed Rate per Port, Peak Cell Rate Service, Sustained Cell Rate Service, Unspecified Bit Rate Service and Transport Channel rate elements. The coupon will be issued to the customer once the requested service is installed. The customer may redeem the coupon at anytime before its expiration date (i.e., 10 months from issuance). Customers who redeem the coupon will receive the one-time credit on the 12th full billing month of the customer's Pricing Plan fixed period. (T) (T) (T)

In order to qualify for this promotion, the customer must order a new ATM Pricing Plan with a fixed period of 12, 24, 36, 48, 60, 72 or 84 months. The coupon is not redeemable if the service is disconnected before the 12th month. (T) (T)

The Company will offer a Service Date based on the type and quantity of Access Services the customer has requested as set forth in 5.2.1 and 8.1.2, preceding. (M)

Certain material on this page formerly appeared on Page 8-97.
Certain material previously found on this page can now be found on Pages 8-320 and 8-321.

8. ADVANCED COMMUNICATIONS NETWORKS

8.1 GENERAL (T)(M)
8.1.8 PROMOTIONS (Cont'd)

Q. ATM Cell Relay Service Pricing Plan Promotion 2 - January 5, 1999 through March 31, 1999 (T)

For a limited time only, the nonrecurring charges for ATM CRS will be waived for customers who install new service and subscribe to a 24-month or greater Pricing (T) Plan; or for existing ATM CRS Pricing Plan customers who install service at a new customer premises or location and subscribe to a 24-month or greater Pricing (T) Plan; or for existing ATM CRS customers who upgrade from a monthly or a 12-month Pricing Plan to a 24-month or greater Pricing Plan. Order applications must (T) be placed from January 5, 1999 through March 31, 1999, with order completion within 120 days of the order application date. The order application date is the date the service is ordered. When order completion is delayed due to Company reasons, the order completion date will be extended. Termination Liability or Discontinuance Charges will not apply.

Exclusions to the above promotion are:

1. Moves of existing services within the same building or to a different building. (T)

2. Each additional VCC and/or VPC charge associated with existing service pointing to an existing location. (T)

3. Subsequent VCC(s) and/or VPC(s) order charge associated with existing service pointing to an existing location. (T) (M)

Certain material on this page formerly appeared on Page 8-98.
Certain material previously found on this page can now be found on Pages 8-321, 8-322 and 8-323.

8. ADVANCED COMMUNICATIONS NETWORKS

8.1 GENERAL (T)(M)
8.1.8 PROMOTIONS (Cont'd)

R. ATM Cell Relay Service Pricing Plan Promotion 3 - September 15,1999 through November 12, 1999 (T)

For a limited time only, ATM CRS customers who install new service and subscribe to a 36-month Pricing Plan will receive credit for 2 months of recurring (T) rates and/or a 60-month Pricing Plan will receive credit for 3 months of recurring (T) rates. This same offering is also available for customers who upgrade from Private Line Services or Frame Relay Services to ATM CRS, upgrade Optical Access Link (OAL) and/or port speeds and for existing ATM CRS customers who install service at a new customer premises or location. Qualifying customers will receive the full credit due within the first 2 billing cycles. Order applications must be placed from September 15, 1999 through November 12, 1999, with order completion within 120 days of the order application date. The order application date is the date the service is ordered. When order completion is delayed due to Company reasons, the order completion date will be extended. Termination Liability and Discontinuance Charges will apply. (M)

Certain material on this page formerly appeared on Page 8-99.
Certain material previously found on this page can now be found on Page 8-323.

8. ADVANCED COMMUNICATIONS NETWORKS

8.1 GENERAL
8.1.8 PROMOTIONS

R. ATM Cell Relay Service Pricing Plan Promotion 3 - September 15,1999 through November 12, 1999 (Cont'd)

Exclusions to this promotion are:

1. Moves of existing services within the same building or to a different building.
2. DS1, DS3, SST, SHARP or SHNS Private Line Services when used with ATM CRS.
3. Standalone Optical Access Link (SAOAL).
4. Transport Channel Mileage (Fixed and Per Mile) that brings a Digital Private Line Service facility to an ATM service point.
5. Adding Virtual Path Connections (VPCs) or Virtual Channel Connections (VCCs) to existing ATM Cell Relay customer accounts.
6. Renewal of an existing ATM CRS Pricing Plan.
7. Change of jurisdiction from Intrastate to Interstate.
8. Changes in bandwidth increments (e.g., 64 kbps to 1 Mbps).
9. Changes in service categories (e.g., CBR to VBR).
10. Any ATM CRS used with *QWEST DSL* Services. (T)

8. ADVANCED COMMUNICATIONS NETWORKS

8.1 GENERAL (T)(M)
8.1.8 PROMOTIONS (Cont'd)

S. LSS Promotion 1 - January 5, 1999 through March 31, 1999 (T)

For a limited time only, the nonrecurring charges for LSS will be waived for customers who install new service and subscribe to a 36-month or greater Pricing Plan; or for existing LSS Pricing Plan customers who install service at a new customer premises or location and subscribe to a 36-month or greater Pricing Plan; or for existing LSS customers who upgrade from a monthly or a 12-month Pricing Plan to a 36-month or greater Pricing Plan. Order applications must be placed from January 5, 1999 through March 31, 1999, with order completion within 120 days of the order application date. The order application date is the date the service is ordered. When order completion is delayed due to Company reasons, the order completion date will be extended. Termination Liability or Discontinuance Charges will not apply. (T) (T) (T)

Exclusions to the above promotion are:

1. Moves of existing services within the same building or to a different building. (T)(M)

Certain material on this page formerly appeared on Page 8-101.
Certain material previously found on this page can now be found on Pages 8-327 and 8-328.

8. ADVANCED COMMUNICATIONS NETWORKS

8.1 GENERAL (T)(M)
8.1.8 PROMOTIONS (Cont'd)

T. MAS Pricing Plan Promotion – June 14, 2000 through September 12, 2000 (T)

For a limited time only, the nonrecurring charges for MAS will be waived for customers who install new service and subscribe to a 12-month or greater Pricing (T) Plan; for existing MAS customers who install service at a new customer premises and subscribe to a 12-month or greater Pricing Plan; or for existing MAS (T) customers who add additional telephone numbers to there existing MAS service. Order applications must be placed from June 14, 2000 through September 12, 2000, with order completion within 45 days of the order application date. The order application date is the date the service is ordered. When order completion is delayed due to Company reasons, the order completion date will be extended. This offering is not available with any other promotion. (M)

Certain material on this page formerly appeared on Page 8-307.
Certain material previously found on this page can now be found on Pages 8-329 and 8-330.

8. ADVANCED COMMUNICATIONS NETWORKS

8.1 GENERAL (T)(M)
8.1.8 PROMOTIONS (Cont'd)

U. MAS Pricing Plan Promotion – July 24, 2000 through October 21, 2000 (T)

The following MAS Pricing Plan promotional offerings are available to customers subscribing to a new MAS 12-, 36- or 60-month Fixed Period Service Rate Plan or (T) adding to an existing MAS 12-, 36- or 60-month Fixed Period Service Rate Plan (T) from July 24, 2000 through October 21, 2000. These offerings may not be combined with any other promotion.

- If a customer subscribes to a MAS 12-month Fixed Period Service Rate Plan, (T) they will receive a credit equal to 1 month of the recurring charges, the credit (T) will be applied to the customer's first month of service.

- If a customer subscribes to a MAS 36-month Fixed Period Service Rate Plan, (T) they will receive a credit equal to 2 months of the recurring charges, the credits (T) will be applied to the customer's first and second months of service.

- If a customer subscribes to a MAS 60-month Fixed Period Service Rate Plan, (T) they will receive a credit equal to 3 months of the recurring charges, the credits (T) will be applied to the customer's first, second and third months of service.

All credits will be forfeited, on a per plan basis, if a customer terminates one of these promotional Fixed Period Service Rate Plans prior to the expiration date of the plan. Any credits already given for the terminated plan will be included in the termination liability charges. (M)

Certain material on this page formerly appeared on Page 8-308.
Certain material previously found on this page can now be found on Page 8-331.

8. ADVANCED COMMUNICATIONS NETWORKS

8.1 GENERAL (T)(M)
8.18 PROMOTIONS (Cont'd)

V. MAS Pricing Plan Promotion – October 2, 2000 through December 29, 2000 (T)

For a limited time only, the Initial and Subsequent MAS Order Charges will be waived for customers who install new MAS Service in the 201 Blocks and Above category for monthly and 12-month Pricing Plans. Order applications must be (C) placed from October 2, 2000 through December 29, 2000, with order completion within 90 days of the order application date. The order application date is the date the service is ordered. When order completion is delayed due to Company reasons, the order completion date will be extended. This offering is not available with any other promotion. (M)

Certain material on this page formerly appeared on Page 8-308.1.
Certain material previously found on this page can now be found on Pages 8-429 and 8-430.

8. ADVANCED COMMUNICATIONS NETWORKS

8.1 GENERAL
8.1.8 PROMOTIONS (Cont'd)

W. *QWEST IDSL* Service Promotion – February 7, 2001 through April 6, 2001. (S-y)

For a limited time only, the Company will waive $151.00 of the $250.00 *QWEST IDSL* Channel Termination nonrecurring charge for customers who subscribe to a (S-y)
new *QWEST IDSL* Channel Termination for 12-, 36- or 60-month Pricing Plans. (C-x)
Order applications must be placed from February 7, 2001 through April 6, 2001, (S-y)
with order completion within 60 days of the order application date. The order application date is the date the service is ordered. When order completion is delayed due to Company reasons, the order completion date will be extended. This offering is not available with any other promotion. (S-y)

(x) Issued under the authority of Special Permission No. 01-012.

(y) Reissued matter filed under Transmittal No. 42, to become effective February 7, 2001.

8. ADVANCED COMMUNICATIONS NETWORKS

8.1 GENERAL
8.1.8 PROMOTIONS (Cont'd)

X. FRS, ATM and LSS Pricing Plan Promotion – April 2, 2001 through June 29, 2001

LSS does not offer a 48-month Pricing Plan. (C)

The following promotional offerings are available to new customers or customers upgrading or adding to their existing service who subscribe to a new 36-month or (C) longer Pricing Plan for FRS, ATM or LSS from April 2, 2001 through June 29, (C) 2001. These offerings are not available with other FRS, ATM or LSS promotions. (C)

New customers will receive 2 or 3 months recurring credit if they subscribe to a 36-month or longer FRS, ATM or LSS Pricing Plan. If the service is for 36 or 48 months then qualifying customers will receive a 2-month credit that will be applied to the customer's first 2 bills. If the service is for 60 months or longer then (T) qualifying customers will receive a 3-month credit that will be applied to their first 3 bills. This same offering is also available for existing customers who upgrade (C) their service to FRS, ATM, or LSS; or who upgrade their Pricing Plan to a higher transmission speed or install new service at a new location; or who upgrade from a monthly Plan to a 36-month or greater Pricing Plan. (C)

Customer orders must be placed from April 2, 2001 through June 29, 2001, with order completion for FRS – DS1 and below within 60 days of the order date and FRS – DS3, ATM and LSS within 120 days of the order date. When order (C) completion is delayed due to Company reasons, the order completion date will be extended. Termination Liability or Discontinuance Charges will not apply.

8. ADVANCED COMMUNICATIONS NETWORKS

8.1 GENERAL
8.1.8 PROMOTIONS (Cont'd)

Y. *QWEST DSL* Service Promotion – April 4, 2001 through July 25, 2001. (C-x)

For a limited time only, the nonrecurring charges for all DMT *QWEST DSL* Services and CAP *QWEST DSL SELECT* Service will be waived for customers who install new service or for existing *QWEST DSL* Service customers who install service at a new customer premises or location. In addition qualifying customers will receive a one-time credit equal to one month of the recurring charges on their first bill if the order application is placed from April 4, 2001 through July 25, 2001. All orders must be completed within 60 days of the order application date, the date the service is ordered. When order completion is delayed due to Company reasons, the order completion date will be extended. This offering is not available with any other promotion. (C-x)

(x) Issued under the authority of Special Permission No. 01-044.

8. ADVANCED COMMUNICATIONS NETWORKS

8.1 GENERAL
8.1.8 PROMOTIONS (Cont'd)

Z. *QWEST IDSL* Service Promotion – June 1, 2001 through July 31, 2001. (N)

For a limited time only, the Company will waive $151.00 of the $250.00 *QWEST IDSL* Channel Termination nonrecurring charge for customers who subscribe to a new *QWEST IDSL* Channel Termination for 12-, 36- or 60-month Pricing Plans. Order applications must be placed from June 1, 2001 through July 31, 2001, with order completion within 60 days of the order application date. The order application date is the date the service is ordered. When order completion is delayed due to Company reasons, the order completion date will be extended. This offering is not available with any other promotion. (N)

8. ADVANCED COMMUNICATIONS NETWORKS

8.1 GENERAL
8.1.8 PROMOTIONS (Cont'd)

AA. FRS, ATM and LSS Pricing Plan Promotion– June 1, 2001 through August 29, 2001 (N)

For a limited time only, the nonrecurring charges for FRS, ATM and LSS with a Fixed Period Service Rate Plan of 12 months or greater will be waived. This offering is for new service customers or existing FRS, ATM or LSS Service customers who install service at a new customer premises or location. Following is a list of the specific nonrecurring charges that will be waived per product:

1. FRS Rate Elements
   - 56 kbps and 1.544 Mbps Access Links
   - 56 kbps and 1.544 Mbps Stand-Alone Access Links
   - 56/64 kbps, 1.544 Mbps and 44.736 Mbps UNI and NNI Ports
   - 56/64 kbps, 1.544 Mbps and 44.736 Mbps UNI and NNI PVCs
   - Central Office Connecting Channels (COCC)

2. ATM Rate Elements
   - 45 Mbps and 155 Mbps Optical Access Links
   - 45 Mbps and 155 Mbps Optical Stand-Alone Access Links
   - 1.544 Mbps, 45 Mbps and 155 Mbps Ports
   - 1.544 Mbps, 45 Mbps and 155 Mbps VCCs and VPCs
   - Central Office Connecting Channels (COCC)

3. LSS Rate Elements
   - LAN Links
   - Remote LAN Links

Customer orders must be placed from June 1, 2001 through August 29, 2001, with order completion for FRS – DS1 and below within 60 days of the order date and FRS – DS3, ATM and LSS within 120 days of the order date. When order completion is delayed due to Company reasons, the order completion date will be extended. Termination Liability or Discontinuance Charges will not apply. This offering is not available with any other promotion. (N)

8. ADVANCED COMMUNICATIONS NETWORKS

8.2 PUBLIC PACKET SWITCHING NETWORK (T)(M)

8.2.1 GENERAL

Public Packet Switching Network (PPSN) is a service, which utilizes packet switching technology and digital transmission facilities to provide common user switched data transport. PPSN consists of Packet Switch Nodes (PSN), Packet Switch Service Points (PSSPs) with modems or data service units (DSUs) and digital facilities. PPSN provides for simultaneous two-way transmission of data signals at various speeds within a PSSP, between two PSSPs, or between a PSSP and a PSN. PPSN connects customers to other customers (end users, Information Service Providers, Interexchange Carriers and other Packet Networks) served from PSSPs and PSNs. (T)

Messages are transported through the network in data packets. Packets remain in the proper sequence by means of the establishment of virtual circuits using transport capabilities of the X.25 or X.75 protocols.

Customers may access the PPSN at those wire centers where PSSPs and/or PSNs are located. These locations are listed in the National Exchange Carrier Association, Inc., Tariff F.C.C. No. 4.

A. Types of Access

PPSN provides the ability for customers to originate or terminate data calls to other customers connected to the service. The type of service available to a customer is dependent on the manner in which the customer accesses the network. There are five types of access available:

- Public Dial Access (to Packet Switch Service Points)
- PSSP Access (via Private Line Transport Service)
- PSN Access (via Private Line Transport Service)
- Private Dial Access (to Packet Switch Service Points) (M)

Certain material on this page formerly appeared on Page 8-2
Certain material previously found on this page can now be found on Pages 8-430 and 8-431.

8. ADVANCED COMMUNICATIONS NETWORKS

8.2 PUBLIC PACKET SWITCHING NETWORK (T)(M)

8.2.1 GENERAL (T)

A. Types of Access (Cont'd)

1. Public Dial Access (to Packet Switch Service Points)

   Customers may access the PPSN Service Public Dial Access ports at PSSPs by dialing the 7- or 10-digit telephone number assigned to the port. The rates and charges for the circuit-switched call placed over the voice telephone network are not included in this service. The charges for the circuit-switched call will be charged by the vendor of that service directly to the customer. In addition, the rates and charges for exchange services are not included. (T) (T)

   Public Dial Access ports provide X.3, X.28 and X.29 asynchronous protocol connections at 300 and 1200 bps, 2.4 and 9.6 kbps and may originate calls to PSSP and PSN Access Ports only. All calls originated from Public Dial Access Ports must be billed to the called party (Reverse Charge). If the called party does not accept the charges, the call will be blocked and cleared.

2. PSSP Access (Via Private Line Transport Service)

   Customers may access the PPSN Service at PSSPs via analog or digital Private Line Transport Service channels as described in Section 7, preceding. Analog Private Line Service - Voice Grade, VG6 or VG10, channels may be used to access the analog ports or Digital Data Service channels may be used to access the synchronous digital ports.

   PSSP Access Ports may be either analog or digital synchronous X.25 protocol. Analog ports provide synchronous connections to the PSSP at speeds of 2.4, 4.8, or 9.6 kbps with X.25 protocol.

   PSSP Access Ports may both originate and terminate calls (messages) as described following: (M)

Certain material on this page formerly appeared on Page 8-3.
Certain material previously found on this page can now be found on Page 8-50.

8. ADVANCED COMMUNICATIONS NETWORKS

8.2 PUBLIC PACKET SWITCHING NETWORK (T)(M)

8.2.1 GENERAL (T)

A.2. (Cont'd)

a. Originating Calls

Calls may be placed to other PSSP Access Ports or to PSN Access Ports. Originating calls are initiated by the PSSP Access customer and are billed according to the billing option selected as follows:

Prepaid (T)

Unless specifically identified on a call by call basis all originating traffic will be charged to the calling party.

Reverse Charge Billing (T)

Unless specifically identified on a call by call basis all originating traffic will be reverse charged to the called party.

b. Terminating Calls

Terminating calls may be received from originating Dial Access Ports, PSSP Access Ports, or PSN Access Ports. The types of calls received are dependent on the billing option selected as follows:

Reverse Charge Acceptance (T)

Customers who select this option will accept the charges for all calls sent to the network address(es) assigned to the customer.

Reverse Charge Denied (T)

Customers who select this option will only be able to receive calls that have been billed to the originating caller (prepaid). When this option is elected, calls from dial access customers cannot be received. (M)

Certain material on this page formerly appeared on Page 8-4.
Certain material previously found on this page can now be found on Page 8-85.

8. ADVANCED COMMUNICATIONS NETWORKS

8.2 PUBLIC PACKET SWITCHING NETWORK (T)(M)

8.2.1 GENERAL (T)

A. Types of Access (Cont'd)

3. PSN Access (Via Private Line Transport Service)

Packet Switch Node (PSN) Ports provide the customer with direct access to a Packet Switch Node. The customer may access the PSN Ports via Analog Private Line Service - Voice Grade, VG6 or VG10, or Digital Data Service channels as described in Section 7. PSN Access Ports may be either X.25 or X.75 protocol connections at speeds of 9.6 kbps analog or 9.6 or 56 kbps digital. (T)

PSN Access Ports may both originate or terminate calls (messages) as described following:

a. Originating Calls

Originating calls may be placed to other PSN Access Ports or to PSSP Access Ports. Originating calls are initiated by the PSN Access customer and are billed according to the default billing option selected:

<u>Prepaid</u> (T)

Unless specifically identified on a call by call basis all originating traffic will be charged to the calling party.

<u>Reverse Charge Billing</u> (T)

Unless specifically identified on a call by call basis all originating traffic will be reverse charged to the called party.

b. Terminating Calls

Terminating Calls may be received from originating Private or Public Dial Access Ports, PSSP Access Ports or PSN Access Ports. PSN Access customers must subscribe to Reverse Charge Acceptance. (M)

Certain material on this page formerly appeared on Page 8-5.
Certain material previously found on this page can now be found on Pages 8-298 and 8-332.

8. ADVANCED COMMUNICATIONS NETWORKS

8.2 PUBLIC PACKET SWITCHING NETWORK (T)(M)

8.2.1 GENERAL (T)

A. Types of Access (Cont'd)

4. Private Dial Access (to Packet Switch Service Points)

Customers may access the PPSN Private Dial Access ports at PSSPs by dialing the unique 7- or 10-digit telephone number assigned to the port(s). The rates and charges for the circuit switched call placed over the voice telephone network are not included in this service. The charges for the circuit switched call will be charged by the vendor of that service directly to the customer. (T)

Private Dial Access ports provide X.3, X.28 and X.29 asynchronous protocol connections at 300 and 1200 bps, 2.4 and 9.6 kbps and synchronous X.32 protocol connections at 9.6 kbps. Private Dial Access ports may originate calls to PSSP and PSN Access ports only. All calls originating from Private Dial Access ports are billed according to 2.a., preceding.

The Private Dial Access port includes a connection to the local switched telecommunications network for the termination of voice telephone network calls at the PSSP. This connection does not provide for a listing in the local exchange telephone directory, and may be arranged as a single line or, for multiple lines, they may be provided in a hunting arrangement. (M)

Certain material on this page formerly appeared on Page 8-6.
Certain material previously found on this page can now be found on Page 8-2.

8. ADVANCED COMMUNICATIONS NETWORKS

8.2 PUBLIC PACKET SWITCHING NETWORK (T)(M)
8.2.1 GENERAL (Cont'd) (T)

B. Performance and Interconnection Specifications

PPSN Service provides high quality transport of data using packet switching and digital transmission facilities. The customer shall provide data terminal equipment in accordance with the interface specifications as described in the Qwest Corporation Technical Publication PUB 77359. Flexible interconnection arrangements are available to the customer as described following:

1. Public Dial Access

Public Dial Access is initiated by the customer dialing the PSSP access number (NPA) N29-2929 via the circuit switched telephone network. Dial Access supports asynchronous protocol only at transmission speeds of 300 and 1200 bps and 2.4 and 9.6 kbps.

- Dial access is not recommended from multiparty exchange service.
- To preclude operator interruptions, public dial access is not recommended from a coin operated telephone except on a third party or credit card basis.

2. PSSP Access

PSSP Access is provided through channels (circuits) as defined in Section 7, preceding, to connect the customer through a modem or data service unit (DSU) to a port on the PSSP. PSSP Access supports synchronous X.25 protocol and has a unique network address. (M)

Certain material on this page formerly appeared on Page 8-7.
Certain material previously found on this page can now be found on Page 8-3.

8. ADVANCED COMMUNICATIONS NETWORKS

8.2 PUBLIC PACKET SWITCHING NETWORK (T)(M)

8.2.1 GENERAL (T)

B.2. (Cont'd)

The X.25 protocol provides the capability of establishing multiple virtual communication links from the customer through the PPSN Network. X.25 protocol ports will interface with analog or digital channels. Analog speeds are 2.4, 4.8 and 9.6 kbps. Digital speeds are 2.4, 4.8, 9.6, and 56 kbps.

3. PSN Access

PSN Access is provided through channels (circuits) as defined in Section 7, preceding, to connect a customer directly to a port on the PSN. This arrangement supports high speed 9.6 or 56 kbps channels and either X.25 or X.75 protocol. X.75 protocol provides load distribution. PSN Access has the capability of establishing multiple virtual communication links from the customer through the PPSN.

Analog access is available only at 9.6 kbps. Digital access is available at 9.6 and 56 kbps.

4. Private Dial Access

Private Dial Access is provided through the voice telecommunications network, as defined in 8.2.1.A.4., preceding, to connect the customer, through an analog modem, to a port on the PSSP. Private Dial Access supports asynchronous (X.3, X.28, X.29) protocol only at transmission speeds of 300 and 1200 bps and 2.4 and 9.6 kbps and synchronous (X.32) protocol only at a transmission speed of 9.6 kbps. (M)

Certain material on this page formerly appeared on Page 8-8.
Certain material previously found on this page can now be found on Page 8-4.

8. ADVANCED COMMUNICATIONS NETWORKS

8.2 PUBLIC PACKET SWITCHING NETWORK (T)(M)
8.2.1 GENERAL (Cont'd)

C Generic Names (T)

The following list of Company-designated BSEs identifies the generic equivalent name for each of the BSEs from Telcordia's ONA Services Users Guide, dated July 31, 1991.

GENERIC	QWEST CORPORATION
Call Redirection	Redirection
Call Redirection	Closed User Group
Call Redirection	Fast Select Acceptance
Default Window Size	Nonstandard Window Size
Flow Control Parameter Negotiation - Packet	Flow Control Parameters
Hunt Groups - Packet	Multiple Port Hunt Group
Hunt Groups - Packet	Reverse Charge Acceptance
Incoming Access Barred - Packet	CUG Incoming Access Barred
Logical Channel Layout - Packet	Logical Channel Layout
Logical Channels - Packet	Logical Channel
Multiple Network Address/Port	Multiple Network Addresses
Outgoing Calls Barred - Packet	CUG Outgoing Access Barred
Permanent Virtual Circuit - Packet	Permanent Virtual Circuit
Reverse Charge Request Option - Packet	Reverse Charge Option (M)

Certain material on this page formerly appeared on Page 8-10.
Certain material previously found on this page can now be found on Page 8-51.

8. ADVANCED COMMUNICATIONS NETWORKS

8.2 PUBLIC PACKET SWITCHING NETWORK (Cont'd) (T)(M)

8.2.2 REGULATIONS

A. General

1. PSSP and PSN access customers must subscribe to an adequate number of channels to handle terminating calls in order not to impair the performance of PPSN. (T)

2. Multiple Network Addresses are available in blocks of 10. One address is included with the port. (T) (T)(M)

Certain material on this page formerly appeared on Page 8-9.
Certain material previously found on this page can now be found on Page 8-52.

8. ADVANCED COMMUNICATIONS NETWORKS

8.2 PUBLIC PACKET SWITCHING NETWORK (T)(M)
8.2.2 REGULATIONS (Cont'd)

B. Rate Regulations

1. The minimum service period for PPSN monthly rate categories is 1 month. The minimum period for Public Packet Switching Pricing Plan is 12 months. (T)

2. For dial access, the minimum usage per call for the Network Connection Time is one minute.

3. The minimum usage per call for Packet Transport is one segment.

4. The minimum charge for all Private Line Transport Services channels connected to PPSN is as specified in Section 7, preceding. (M)

Certain material on this page formerly appeared on Page 8-42.
Certain material previously found on this page can now be found on Page 8-53.

8. ADVANCED COMMUNICATIONS NETWORKS

8.2 PUBLIC PACKET SWITCHING NETWORK (Cont'd) (T)(M)

8.2.3 RATE ELEMENTS (T)

There are four rate categories which may apply to the PPSN Service:

- PSSP, PSN, and Private Dial Port Access Connection
- Network Usage (Including Dial Access)
- Port Features and Basic Service Elements (BSEs)
- Rearrangement Charge

In addition, the rates and charges for Private Line Transport Service, as described in Section 7, preceding, apply for each private line channel between a customer's designated premises and a PSSP or PSN port. The appropriate vendor's rates apply for circuit switched calls to dial access ports. In addition, rates and charges for exchange services are not included.

A. PSSP, PSN, and Private Dial Ports Access Connections (T)

The Access Connection, Access Port rate category provides a dedicated connection at a PSSP or PSN. The Private Dial Access port provides for a local exchange switched connection at the PSSP. There are two types of dedicated access ports, the PSSP Access Port described in 1., following, and the PSN Access Port (T) described in 2., following. The Private Dial Access Port is described in 3., (T) following.

1. PSSP Access Port provides the customer with a dedicated analog or digital access (T) through a modem or Data Service Unit (DSU) to a port on a PSSP. Transmission speeds of 2.4, 4.8, 9.6, and 56 kbps with X.25 protocol are available. (M)

Certain material on this page formerly appeared on Page 8-48.
Certain material previously found on this page can now be found on Page 8-54.

8. ADVANCED COMMUNICATIONS NETWORKS

8.2 PUBLIC PACKET SWITCHING NETWORK (T)(M)

8.2.3 RATE ELEMENTS

A. PSSP, PSN, and Private Dial Ports Access Connections (Cont'd)

2. PSN Access Port provides the customer with dedicated analog or digital access through a modem or DSU to a port on the PSN. Transmission speeds of 9.6 or 56 kbps with X.25 or X.75 protocols are available. (T)

3. Private Dial Access port provides the customer with an analog access, via the public switched network, to a port on a PSSP. Transmission speeds of 300 and 1200 bps and 2.4 and 9.6 kbps with X.3, X.28, X.29 asynchronous protocol and 9.6 kbps with X.32 synchronous protocol are available. (T)

B. Network Connect Time (Dial Access Only) (T)

Dial Access Usage provides for the use of a Dial Access Port other than Private Dial Access Ports, from the time the call is connected until it is terminated. The usage is billed to the terminating network address of the PPSN dial access call on a per minute of connect time basis rounded up to the next whole minute. Usage will be rated at the day rate for that portion of the call in effect during the day rate period (6:00 a.m. 6:00 p.m.) and at the night rate for the portion of the call in effect during the night rate period (after 6:00 p.m. and before 6:00 a.m.) as measured at the Signaling Network Control Center, Denver, Colorado. (T)(M)

Certain material on this page formerly appeared on Page 8-49.
Certain material previously found on this page can now be found on Pages 8-55, 8-56 and 8-57.

8. ADVANCED COMMUNICATIONS NETWORKS

8.2 PUBLIC PACKET SWITCHING NETWORK (T)(M)
8.2.3 RATE ELEMENTS (Cont'd)

C. Port Features and BSEs (T)

The PSSP and PSN Access customers may select the following port features and BSEs. Some of these features and BSEs are offered at no additional monthly charge. See 8.4.3, following. (T)

1. Access (Asynchronous Only) - One of these three must be selected:

   a. Incoming Calls Barred - The access port is prevented from accepting incoming virtual calls. (T)

   b. Outgoing Calls Barred - The access port is prevented from placing outgoing virtual calls. (T)

   c. Two Way Access - The access port is capable of accepting incoming and placing outgoing calls. (T)

2. Auto Call (Asynchronous only) - Allows the subscriber to access a single, predefined address in lieu of the normal call initiation process. The port may be limited to the sole access of this single address. Where available, the subscriber may override the "Auto Call" option and call another address. (T)

3. Call Redirection (BSE) (Asynchronous and X.25) - At a customer request or in the event of a port failure calls will be directed to a single alternate address. This feature requires the customer to have an alternate port and line designated for this purpose. This feature works automatically concurrent with call initiation. (T)

4. Closed User Group (CUG) (BSE) (Asynchronous, and X.25) - Provides transmission via virtual channels among several specific network addresses arranged into a subnetwork. Each network address may be arranged in a CUG with as many as 10 CUG's available per subscribing host. CUG options are: (T)

   a. CUG Incoming Access Barred (BSE) - Allows a member of the CUG to originate calls to other members of that CUG, but not receive incoming calls from members of that CUG. (T) (M)

Certain material on this page formerly appeared on Page 8-50.
Certain material previously found on this page can now be found on Pages 8-56 and 8-57.

8. ADVANCED COMMUNICATIONS NETWORKS

8.2 PUBLIC PACKET SWITCHING NETWORK (T)(M)
8.2.3 RATE ELEMENTS

C.4. (Cont'd)

b. CUG with Incoming Access - Allows a member of a CUG to receive incoming calls from any Data Terminal Equipment (DTE) not in that CUG or from any DTE within that CUG with the "CUG with Outgoing Access" feature. (T)

c. CUG Outgoing Access Barred (BSE) - Allows a member of a CUG to receive calls from other members of that CUG, but not originate any calls to members of the CUG. (T)

d. CUG with Outgoing Access - Allows a member of a CUG to make outgoing calls to any DTE not in that CUG and to any DTE within that CUG with the "CUG with Incoming Access" feature. (T)

e. CUG Access Only - No incoming or outgoing calls allowed outside of that CUG. (T)

5. Fast Select Acceptance (BSE) (Asynchronous and X.25) - Permits the request of up to 124 octets of user data in the call initiation packet and acceptance of up to 124 octets of data in the call termination packet. Additional data packets can be accepted following the acceptance of the call initiation packet. (T)

6. Flow Control Parameters (BSE) (Asynchronous, X.25 and X.75) - Permits negotiation on a per call basis of the flow control parameter window size for each direction of data transmission in the network. Window size values of two through seven are supported. Default value is two. Maximum packet size of 256 octets is supported. Default packet size is 128 octets. (T)

7. Link Level Parameters (X.25 and X.75) - Allows the subscriber to specify link level, acknowledgment timer, number of retransmission attempts, and frame size. (T)

8. Logical Channel (BSE) (X.25 and X.75) - Allows the DTE to derive multiple logical channels from a single physical access line. This is accomplished by specifying the logical channel number on every packet that crosses the Network interface. (T) (T) (M)

Certain material on this page formerly appeared on Page 8-51.
Certain material previously found on this page can now be found on Page 8-87.

8. ADVANCED COMMUNICATIONS NETWORKS

8.2 PUBLIC PACKET SWITCHING NETWORK (T)(M)

8.2.3 RATE ELEMENTS

C. Port Features and BSEs (Cont'd)

9. Logical Channel Layout (BSE) (X.25 and X.75) - Permits the arrangement of logical channels to be configured as incoming, outgoing, two way and/or Private Virtual Circuit (PVC). (T)

10. Mnemonic Addressing (BSE) (Asynchronous, and X.25) - Allows the subscriber to access predefined addresses by utilizing a predesignated alphanumeric unique character(s) in lieu of the normal call initiation process. The port is not limited to sole access of this single address when normal call initiation procedures are followed. (T)

11. Multiple Port Hunt Groups (BSE) (Asynchronous, and X.25) - A group of access ports with a single data network address. The Maximum number of ports available per hunt group is 16. (T)

12. Multiple Network Addresses (BSE) (X.25 only) - One address is included with the port. More than one network address may be assigned to a single access port. Multiple addresses may be purchased in blocks of 10. (T)

13. Network Terminal Profile (Asynchronous only) - Permits assignment of a profile representing the X.3, X.28 and X.29 parameter configuration of the user's asynchronous terminal. (T) (M)

Certain material on this page formerly appeared on Page 8-52.
Certain material previously found on this page can now be found on Page 8-88.

8. ADVANCED COMMUNICATIONS NETWORKS

8.2 PUBLIC PACKET SWITCHING NETWORK (T)(M)

8.2.3 RATE ELEMENTS

C. Port Features and BSEs (Cont'd)

14. Nonstandard Window Size (BSE) (Asynchronous, X.25 and X.75) - Permits the customer to select a window size of two through seven for either or both directions of transmission. Standard default value is two. (T)

15. Permanent Virtual Circuit (BSE) (Asynchronous, X.25 and X.75) - Permits transmission between two Data Terminal Equipment (DTEs) on the network without the initial packet to establish the call. The transmission path is predefined throughout the network. The default window size for both directions of transmission is two. (T)

16. Reverse Charge Option (BSE) - Allows for the billing of usage charges associated with calls to be billed to the terminating network address. (T)

17. Reverse Charge Acceptance (BSE) (Terminating Calls) - Customers who select this option will accept the charges for all calls sent to the network address(es) assigned to the customer. In order to receive calls from a dial access customer, this option must be selected. (T)

18. Throughput Class Negotiation (X.25 and X.75) - Permits negotiation on a per call basis of the throughput class for each direction of data transmission. (T)

19. X.25 Gateway Option (BSE) - Provides the ability to route calls to a private X.25 network on the PPSN using the first three or six digits of the destination address. It is the responsibility of the private network to route calls to the specific destination address. This feature allows a private network to assign individual addresses to end users while having a single interconnection to the Company over which traffic will be delivered. The X.25 Gateway Option is available for either three- or six-digit screening and will be provided on PSN X.25 ports only. (T)(M)

Certain material on this page formerly appeared on Pages 8-52 and 8-53.
Certain material previously found on this page can now be found on Page 8-89.

8. ADVANCED COMMUNICATIONS NETWORKS

8.2 PUBLIC PACKET SWITCHING NETWORK (T)(M)

8.2.3 RATE ELEMENTS

C. Port Features and BSEs (Cont'd)

20. Default Throughput Class - Permits a default value to be used for the throughput class for each direction of data on a per call basis. (T)

21. Fast Select - Permits a user to transmit data prior to the establishment of a virtual circuit. Users may send up to 128 octets (bytes) of data along with a call request packet. In similar fashion, the called party may respond immediately with up to 128 octets (bytes) of data when accepting the call or requesting call clearance. (T)

22. Nonstandard Packet Size - A feature which permits the customer to select a packet size up to 256 octets (bytes). The default value is 128 octets (bytes). (T)

D. Rearrangement Charge (T)

When any feature or group of features listed in 8.2.5.C., following, is added or changed subsequent to initial subscription, a rearrangement charge, as set forth in 8.2.5.D., following, will apply, in addition to the nonrecurring charge associated with each feature added or changed. (T) (T) (M)

Certain material on this page formerly appeared on Pages 8-52 and 8-53.
Certain material previously found on this page can now be found on Page 8-90.

8. ADVANCED COMMUNICATIONS NETWORKS

8.2 PUBLIC PACKET SWITCHING NETWORK (Cont'd) (T)(M)

8.2.4 PRICING PLANS (T)

PPSN may be ordered at the customer's option on a month-to-month basis or for fixed periods of 3 years (36 months) or 5 years (60 months). The optional rate plan allows the PPSN customer to order this service with the assurance that there will be no increases in rates during the fixed period. The optional rate plans apply to the PSSP Access Port, PSN Access Port, Private Dial Access, and Logical Channel rate elements.

A. Fixed Period Service Rate Plans (T)

The customer may subscribe to a 36- or 60-month fixed period service rate plan. (T)
The minimum service period for fixed period service is 12 months. The customer (T)
must specify the length of the fixed period service at the time the service is ordered.

For customers that subscribe to fixed period service of 36 or 60 months, the monthly rates for the entire fixed period will be frozen from Company-initiated increases, at the rates in effect for the fixed period on the service date.

All rate elements of a PPSN service to be included in a fixed period service must be ordered under the same term conditions (i.e., all 36 months or all 60 months) and with the same negotiated service date.

Ports and Logical Channels may be added to an existing fixed period on a month-to-month basis or under the same fixed period rate plan as the existing PPSN, but at the rates and charges in effect at the time of the addition. (M)

Certain material on this page formerly appeared on Page 8-64.
Certain material previously found on this page can now be found on Page 301.

8. ADVANCED COMMUNICATIONS NETWORKS

8.2 PUBLIC PACKET SWITCHING NETWORK (T)(M)

8.2.4 PRICING PLANS

A. Fixed Period Service Rate Plans (Cont'd) (T)

At the end of the fixed period service, the customer may convert to month-to-month or subscribe to a new fixed period service. The monthly rates will be adjusted to those in effect for the new fixed period service. Should the customer not make a choice by the end of the fixed period, the rates will automatically revert to the month-to-month option.

If a rate decrease occurs during the term of an existing fixed rate plan contract, the reduced rates will automatically be applied to the remaining term of the current contract period. (T)

Effective September 1, 1998, customers establishing a Fixed Period Rate Plan, will not receive a rate decrease if the Company decreases rates during the term of the plan. Fixed Period Rate Plans established on or before August 31, 1998, will automatically receive a rate decrease if the Company decreases rates during the term of the plan. (T) (M)

Certain material on this page formerly appeared on Page 8-65.
Certain material previously found on this page can now be found on Page 302.

8. ADVANCED COMMUNICATIONS NETWORKS

8.2 PUBLIC PACKET SWITCHING NETWORK (T)(M)
8.2.4 PRICING PLANS (Cont'd)

B. Upgrades In Rate Plan (T)

Services rated as month-to-month may be upgraded to a fixed period service rate plan at any time the customer chooses without incurring nonrecurring or discontinuance charges, this includes ports and logical channels added subsequently to an existing fixed period rated service but rated as month-to-month (see A., preceding). In addition, customers rated under the 36-month plan may (T) upgrade to the 60-month plan without incurring nonrecurring or discontinuance charges. The monthly rates will be those that are in effect at the time the service is upgraded. New minimum service periods apply to all upgrades.

New minimum service period applies to all Packet Switching Pricing Plan rate elements that are upgraded in the following manner:

- If the service being upgraded has been in place for more than 12 months, minimum period provisions will not apply, or

- If the service being upgraded has been in place for less than 12 months, the time in service will be applied against the minimum period term. (M)

Certain material on this page formerly appeared on Page 8-65.
Certain material previously found on this page can now be found on Page 303.

8. ADVANCED COMMUNICATIONS NETWORKS

8.2 PUBLIC PACKET SWITCHING NETWORK (Cont'd) (T)(M)

8.2.5 RATES AND CHARGES (T)

A. Access Connection - Monthly

1. PSSP Access Port

	USOC	NONRECURRING CHARGE	MONTHLY RATE
• X.25 Protocol - Synchronous Analog per port with modem for transmission speeds of up to:			
- 2.4 kbps	LDZ24	$154.00	$175.00
- 4.8 kbps	LDZ48	154.00	175.00
- 9.6 kbps	LDZ96	154.00	175.00
• X.25 Protocol - Synchronous Digital per port with DSU for transmission speeds of:			
- 2.4 kbps	LDD24	154.00	175.00
- 4.8 kbps	LDD48	154.00	175.00
- 9.6 kbps	LDD96	154.00	175.00
- 56 kbps	LDD56	154.00	175.00 (M)

Certain material on this page formerly appeared on Page 8-115.
Certain material previously found on this page can now be found on Pages 8-333 and 8-334.

8. ADVANCED COMMUNICATIONS NETWORKS

8.2 PUBLIC PACKET SWITCHING NETWORK (T)(M)
8.2.5 RATES AND CHARGES (T)

A. Access Connection - Monthly (Cont'd)

2. PSN Access Port

	USOC	NONRECURRING CHARGE	MONTHLY RATE
• X.25 Protocol - Synchronous Analog per port with modem for transmission speeds of up to:			
- 9.6 kbps	L5Z96	$154.00	$175.00
• X.25 Protocol - Synchronous Digital per port with DSU for transmission speeds of:			
- 9.6 kbps	L5D96	154.00	175.00
- 56 kbps	L5D56	154.00	175.00
• X.75 Protocol - Synchronous Analog per port with modem for transmission speeds of:			
- 9.6 kbps	LDZ97	154.00	175.00
• X.75 Protocol - Synchronous Digital per port with DSU for transmission speeds of:			
- 9.6 kbps	LDD97	154.00	175.00
- 56 kbps	LDD57	154.00	175.00

(M)

Certain material on this page formerly appeared on Page 8-116.
Certain material previously found on this page can now be found on Page 8-335.

8. ADVANCED COMMUNICATIONS NETWORKS

8.2 PUBLIC PACKET SWITCHING NETWORK (T)(M)
8.2.5 RATES AND CHARGES (T)

A. Access Connection - Monthly (Cont'd)

3. Private Dial Access Port

	USOC	NONRECURRING CHARGE	MONTHLY RATE	
• Asynchronous (X.3, X.28, X.29 Protocols) Analog per port with exchange dial access connection and modem for transmission speeds of:				
- 300 and 1200 bps and 2.4 kbps	LL512	$154.00	$252.00	
- 9.6 kbps	LL596	154.00	252.00	
• Synchronous (X.32 Protocol) Analog per port with exchange dial access connection and modem for a transmission speed of:				
- 9.6 kbps	L3XXE	154.00	252.00	(M)

Certain material on this page formerly appeared on Page 8-117.
Certain material previously found on this page can now be found on Page 8-432.

8. ADVANCED COMMUNICATIONS NETWORKS

8.2 PUBLIC PACKET SWITCHING NETWORK (T)(M)
8.2.5 RATES AND CHARGES (Cont'd) (T)

B. Network Usage - Monthly

	RATE PER MINUTE
• Network Connect Time, per dial access minute or fraction thereof:	
- Day rate[1]	$0.060
- Night rate[2]	0.060

[1] Day rate 6:00 a.m. - 6:00 p.m. Local time, Denver, CO.

[2] Night rate after 6:00 p.m. and before 6:00 a.m. Local time, Denver, CO. (M)

Certain material on this page formerly appeared on Page 8-118.
Certain material previously found on this page can now be found on Page 8-58.

8. ADVANCED COMMUNICATIONS NETWORKS

8.2 PUBLIC PACKET SWITCHING NETWORK (T)(M)
8.2.5 RATES AND CHARGES (Cont'd) (T)

C. Port Features - Monthly

	USOC	NONRECURRING CHARGE	MONTHLY RATE	
• Incoming Calls Barred	LD91V	–	–	
• Outgoing Calls Barred	LD90V	–	–	
• Two Way Access	LRV	–	–	
• Auto Call, per destination address	LJP	$10.00	$1.00	
• Call Redirection	LRD	22.00	8.00	
• Closed User Group	LDJ	22.00	8.00	
• Default Throughput Class	LHE	10.00	1.00	
• Fast Select	FSF	10.00	1.00	
• Fast Select Acceptance	LD5FS	10.00	1.00	
• Flow Control Parameters	LD5FC	–	–	(M)

Certain material on this page formerly appeared on Page 8-119.
Certain material previously found on this page can now be found on Pages 8-59 and 8-60.

8. ADVANCED COMMUNICATIONS NETWORKS

8.2 PUBLIC PACKET SWITCHING NETWORK (T)(M)
8.2.5 RATES AND CHARGES (T)

C. Port Features – Monthly (Cont'd) (T)

	USOC	NONRECURRING CHARGE	MONTHLY RATE	
• Link Level Parameters	LLE	$10.00	$1.00	(T)
• Logical Channel Layout	LXN	10.00	1.00	
• Mnemonic Addressing	PJS	10.00	1.00	
• Multiple Port Hunt Groups, each address	LDM	22.00	8.00	
• Multiple Network Addresses, blocks of 10 addresses[1]	LDQ	10.00	1.00	
• Network Terminal Profile	LUZ	10.00	1.00	
• Nonstandard Packet Size	LNP	10.00	1.00	(M)

(D)

[1] One address is included with the port. (M)

Certain material on this page formerly appeared on Page 8-119.
Certain material previously found on this page was removed.

8. ADVANCED COMMUNICATIONS NETWORKS

8.2 PUBLIC PACKET SWITCHING NETWORK (T)(M)
8.2.5 RATES AND CHARGES (T)

C. Port Features – Monthly (Cont'd)

	USOC	NONRECURRING CHARGE	MONTHLY RATE
• Nonstandard Window Size	LNW	$10.00	$1.00
• Permanent Virtual Circuit	LDV	22.00	8.00
• Reverse Charge Option[1]	LD4	10.00	–
• Reverse Charge Acceptance[1]	RBN	10.00	–
• Throughput Class Negotiation	LD1	10.00	1.00
• Logical Channels, per port, per channel			
- First 2 channels	L38X1	–	–
- Each additional channel	L38XA	10.00	1.00
• X.25 Gateway Option (PSN X.25 Access Port only)			
- Three digit screening	GTW3X	22.00	8.00
- Six digit screening	GTW6X	22.00	8.00
- Changes and/or additions to three or six digit screening	NRBGT	10.00	1.00
D. Rearrangement Charge, per rearrangement, per order	X25	27.00	–

(M)

(D)

[1] The nonrecurring charge applies when this feature is installed subsequent to the initial installation of the service. (M) (M)

Certain material on this page formerly appeared on Page 8-120.
Certain material previously found on this page was removed.

8. ADVANCED COMMUNICATIONS NETWORKS

8.2 PUBLIC PACKET SWITCHING NETWORK (T)(M)
8.2.5 RATES AND CHARGES (Cont'd) (T)

E. Access Connection - 36 Months

1. PSSP Access Port

	USOC	NONRECURRING CHARGE	MONTHLY RATE
• X.25 Protocol - Synchronous Analog per port with modem for transmission speeds of up to:			
- 2.4 kbps	L3L2C	$154.00	$157.50
- 4.8 kbps	L3L2D	154.00	157.50
- 9.6 kbps	L3L2E	154.00	157.50
• X.25 Protocol - Synchronous Digital per port with DSU for transmission speeds of:			
- 2.4 kbps	L3S2C	154.00	157.50
- 4.8 kbps	L3S2D	154.00	157.50
- 9.6 kbps	L3S2E	154.00	157.50
- 56 kbps	L3S2G	154.00	157.50

(M)

(D)

Certain material on this page formerly appeared on Page 8-121.
Certain material previously found on this page was removed.

8. ADVANCED COMMUNICATIONS NETWORKS

8.2 PUBLIC PACKET SWITCHING NETWORK (T)(M)
8.2.5 RATES AND CHARGES (T)

E. Access Connection - 36 Months (Cont'd)

2. PSN Access Port

	USOC	NONRECURRING CHARGE	MONTHLY RATE
• X.25 Protocol - Synchronous Analog per port with modem for transmission speeds of up to:			
- 9.6 kbps	L3U2E	$154.00	$157.50
• X.25 Protocol - Synchronous Digital per port with DSU for transmission speeds of:			
- 9.6 kbps	L3V2E	154.00	157.50
- 56 kbps	L3V2G	154.00	157.50
• X.75 Protocol - Synchronous Analog per port with modem for transmission speeds of:			
- 9.6 kbps	L3L2K	154.00	157.50
• X.75 Protocol - Synchronous Digital per port with DSU for transmission speeds of:			
- 9.6 kbps	L3S2K	154.00	157.50
- 56 kbps	L3S2L	154.00	157.50

(M)

(D)

Certain material on this page formerly appeared on Page 8-122.
Certain material previously found on this page was removed.

8. ADVANCED COMMUNICATIONS NETWORKS

8.2 PUBLIC PACKET SWITCHING NETWORK (T)(M)
8.2.5 RATES AND CHARGES (T)

E. Access Connection - 36 Months (Cont'd)

3. Private Dial Access Port

	USOC	NONRECURRING CHARGE	MONTHLY RATE
• Asynchronous (X.3, X.28, X.29 Protocols) Analog per port with exchange dial access connection and modem for transmission speeds of:			
- 300 and 1200 bps and 2.4 kbps	L352J	$154.00	$226.80
- 9.6 kbps	L352E	154.00	226.80
• Synchronous (X.32 Protocol) Analog per port with exchange dial access connection and modem for a transmission speed of:			
- 9.6 kbps	L3X2E	154.00	226.80

4. Port Features

• Logical Channels, per port, per channel			
- First 2 channels	L3821	–	–
- Each additional channel	L382A	10.00	1.50 (M)

Certain material on this page formerly appeared on Page 8-123.
Certain material previously found on this page can now be found on Page 91.

8. ADVANCED COMMUNICATIONS NETWORKS

8.2 PUBLIC PACKET SWITCHING NETWORK (T)(M)
8.2.5 RATES AND CHARGES (Cont'd) (T)

F. Access Connection - 60 Months

1. PSSP Access Port

	USOC	NONRECURRING CHARGE	MONTHLY RATE
• X.25 Protocol - Synchronous Analog per port with modem for transmission speeds of up to:			
- 2.4 kbps	L3L3C	$154.00	$140.00
- 4.8 kbps	L3L3D	154.00	140.00
- 9.6 kbps	L3L3E	154.00	140.00
• X.25 Protocol - Synchronous Digital per port with DSU for transmission speeds of:			
- 2.4 kbps	L3S3C	154.00	140.00
- 4.8 kbps	L3S3D	154.00	140.00
- 9.6 kbps	L3S3E	154.00	140.00
- 56 kbps	L3S3G	154.00	140.00 (M)

Certain material on this page formerly appeared on Page 8-124.
Certain material previously found on this page can now be found on Pages 8-92 and 8-93.

8. ADVANCED COMMUNICATIONS NETWORKS

8.2 PUBLIC PACKET SWITCHING NETWORK (T)(M)
8.2.5 RATES AND CHARGES (T)

F. Access Connection - 60 Months (Cont'd)

2. PSN Access Port

	USOC	NONRECURRING CHARGE	MONTHLY RATE
• X.25 Protocol - Synchronous Analog per port with modem for transmission speeds of up to:			
- 9.6 kbps	L3U3E	$154.00	$140.00
• X.25 Protocol - Synchronous Digital per port with DSU for transmission speeds of:			
- 9.6 kbps	L3V3E	154.00	140.00
- 56 kbps	L3V3G	154.00	140.00
• X.75 Protocol - Synchronous Analog per port with modem for transmission speeds of:			
- 9.6 kbps	L3L3K	154.00	140.00
• X.75 Protocol - Synchronous Digital per port with DSU for transmission speeds of:			
- 9.6 kbps	L3S3K	154.00	140.00
- 56 kbps	L3S3L	154.00	140.00

(M)

Certain material on this page formerly appeared on Page 8-125.
Certain material previously found on this page can now be found on Page 8-94.

8. ADVANCED COMMUNICATIONS NETWORKS

8.2 PUBLIC PACKET SWITCHING NETWORK (T)(M)
8.2.5 RATES AND CHARGES (T)

F. Access Connection - 60 Months (Cont'd)

3. Private Dial Access Port

	USOC	NONRECURRING CHARGE	MONTHLY RATE
• Asynchronous (X.3, X.28, X.29 Protocols) Analog per port with exchange dial access connection and modem for transmission speeds of:			
- 300 and 1200 bps and 2.4 kbps	L353J	$154.00	$201.60
- 9.6 kbps	L353E	154.00	201.60
• Synchronous (X.32 Protocol) Analog per port with exchange dial access connection and modem for a transmission speed of:			
- 9.6 kbps	L3X3E	154.00	201.60

4. Port Features

• Logical Channels, per port, per channel			
- First 2 channels	L3831	–	–
- Each additional channel	L383A	10.00	1.00

(M)

Certain material on this page formerly appeared on Page 8-126.
Certain material previously found on this page can now be found on Pages 8-95 and 8-96.

8. ADVANCED COMMUNICATIONS NETWORKS

8.3 FRAME RELAY SERVICE (S-y)

8.3.1 GENERAL

A. Description

Frame Relay Service (FRS), employing digital technology, provides high speed access connections and throughput to interstate service providers or provides high speed throughput to intraLATA interstate Local Area Networks (LANs), as well as host access capabilities. For interLATA interstate FRS, the customer must specify the IC to which the service is connected and the means by which the FRS is transported to another state. Utilizing statistical multiplexing, FRS enables users to allocate circuit bandwidth to applications as needed, up to the maximum bandwidth purchased, rather than assigning fixed channels to specific applications. FRS supports transmission speeds up to 44.736 Mbps.

FRS requires the use of customer-provided terminal equipment that functions as a multiplexer/bridge/router. This terminal equipment must be purchased separately from the FRS and must conform to Telecommunications Standardization Sector of the International Telecommunications Union (ITU-T) and American National Standards Institute (ANSI) standards set forth in technical publications. The terminal equipment accumulates customer data and puts it into a frame relay format suitable for transmission over the Frame Relay Advanced Communications Services (ACS) Network.

FRS conforms to ITU-T and ANSI standards set forth in ANSI technical documents (see "Reference To Technical Publications" in Section 0, preceding). Technical Specifications for FRS are delineated in Qwest Corporation Technical Publication PUB 77372. Performance specifications for 44.736 Mbps FRS are delineated in Qwest Corporation Technical Publication PUB 77324 and PUB 77372. (S-y)

<u>Grandfathered Services</u> (N)

As of December 31, 2000, 2-Wire 128 kbps Service, and Fault Tolerant and Priority PVC Features are Grandfathered to existing customers.

Month-to-month customers may retain 2-Wire 128 kbps Service, Fault Tolerant and Priority PVC until December 31, 2001. At that time the Grandfathered service/feature will be discontinued. (N)

(y) Reissued matter filed under Transmittal No. 28, to become effective December 6, 2000.

8. ADVANCED COMMUNICATIONS NETWORKS

8.3 FRAME RELAY SERVICE (S-y)

8.3.1 GENERAL

A. Description (S-y)

Grandfathered Services (Cont'd) (N)

Customers with an existing fixed period plan may retain the service/feature until the expiration date of the fixed period. Customers with fixed periods expiring between December 31, 2000 and November 30, 2001 may extend their contract until December 31, 2001, and retain the service at their contracted rates. Customers must contact their sales representative to request this extension.

Customers with 2-Wire FRS, Fault Tolerant and Priority PVC on a fixed period plan may make additions, rearrangements, changes, or moves of existing service if the service, required equipment, and facilities are available for the duration of the fixed period.

Customers may change their existing 2-Wire FRS to 4-wire FRS, 56 kbps, 1.544 Mbps or fractions thereof, and the Company will waive the nonrecurring change for the new 4-wire service. Month-to-month customers may migrate to 4-wire FRS at no charge until December 31, 2001. Customers under contract may migrate to 4-wire FRS at no charge prior to the expiration date of that contract. (N)

(y) Reissued matter filed under Transmittal No. 28, to become effective December 6, 2000.

8. ADVANCED COMMUNICATIONS NETWORKS

8.3 FRAME RELAY SERVICE (S-y)
8.3.1 GENERAL (Cont'd)

B. Service Elements

1. Network Interface

When an FRS Access Link is used to access the ACS Frame Relay Network, the point at which a customer's data transmissions first enter the network supporting Frame Relay Service is the network interface. It is the point of interconnection between Company communications facilities and customer terminal equipment.

2. Access Link

For 4-Wire 56 kbps through 1.544 Mbps Frame Relay Service, a connecting FRS Access Link provides access to the ACS Frame Relay Network customer facilities at the network interface connecting other frame relay networks' facilities at the network interface with an Information Transfer service element. The 56 kbps Access Link utilizes the 56 kbps Information Transfer service element, a 64 kbps Access Link utilizes the 64 kbps Information Transfer, and the 1.544 Mbps Access Link utilizes the 56 kbps through 1.544 Mbps Information Transfer service elements. (S-y)

A Grandfathered 2-wire 128 kbps Access Link employs Integrated Services (C-y)
Digital Network (ISDN) BRI signaling over a single pair to allow customers to (S-y)
access Frame Relay Service over local loop facilities. The 2-Wire 128 kbps Access Link utilizes a 2-Wire 128 kbps User-To-Network Information Transfer service element and must be connected to a Permanent Virtual Connection(s). The customer's serving wire center must be a Company-designated FRS Service Point.

Frame Relay uni-directional polling is required on the Access Link when used in conjunction with User-To-Network Information Transfer. Frame Relay bi-directional polling is required on the Access Link when used in conjunction with the Network-To-Network Information Transfer. (S-y)

(y) Reissued matter filed under Transmittal No. 28, to become effective December 6, 2000.

8. ADVANCED COMMUNICATIONS NETWORKS

8.3 FRAME RELAY SERVICE (T)(M)

8.3.1 GENERAL

B.2. (Cont'd) (T)

In lieu of the 56 or 64 kbps or 1.544 Mbps 4-Wire FRS Access Link, a Private Line Transport 56 or 64 kbps or any 1.544 Mbps interface in Section 7 and/or Section 15, or an EICT (Expanded Interconnection Channel Termination) DDS, EICT 1.544, or ITP (Interconnect Tie Pair) 1.544 Mbps from Section 21, may be used to access Frame Relay Service.

In lieu of an FRS Access Link, a Private Line Transport DS3 Service Channel Termination (CT) with Clear Channel Capability, as set forth in Section 7, is used to provide access to a 44.736 Mbps Information Transfer. The DS3 Service CT provides access to the ACS Frame Relay Network switch via a connection between customer facilities at the network interface and an Information Transfer service element. In lieu of the DS3 CT, an EICT 44.736 or ITP 44.736, specified in Section 21, may be used to access FRS. FRS switch locations are designated by the Company and are identified in the National Exchange Carrier Association, Inc. Tariff F.C.C. No. 4.

3. Stand-Alone Access Link

A Stand-Alone Access Link connects customer-premises facilities to frame relay service networks provided by service providers other than the Company. It does not connect to the ACS Frame Relay Network. A Stand-Alone Access Link requires uni-directional polling. Private Line Transport Service (PLTS) Transport Channel mileage rates as set forth in Section 7, may be required in conjunction with a Stand-Alone Access Link to connect the customer's serving wire center, or node, with the serving wire center, or node, of another frame relay service provider. (M)

Certain material on this page formerly appeared on Page 8-13.
Certain material previously found on this page can now be found on Page 8-99.

8. ADVANCED COMMUNICATIONS NETWORKS

8.3 FRAME RELAY SERVICE (T)(M)

8.3.1 GENERAL

B. Service Elements (Cont'd) (T)

4. Ports

   Ports are part of the FR switch and are the physical entry points for Access Links into the ACS Network. They are originating and terminating points for Permanent Virtual Connections (PVC) transport facilities between FR switches. Ports include the electronic equipment used to connect these service elements to the ACS Network. They enable customers to allocate bandwidth to applications as needed at customer-designated transmission speeds for 4-Wire of up to 56 or 64 kbps, 1.544 Mbps, 44.736 Mbps and for 2-Wire 128 kbps.

5. Service Points

   Service Points are geographical locations designated by the Company where the ACS Network Ports are located and where the ACS Network is accessed. Service Point locations are designated by the Company and are identified in the National Exchange Carrier Association, Inc. Tariff F.C.C. No. 4. When the Company establishes new Service Points, which result in a change of existing FRS, the affected services will be rerated and redesigned to the new Service Point at no charge to the customers.

6. User-To-Network Information Transfer (UNIT)

   The User-To-Network Information Transfer (UNIT) service element transfers information between the User-To-Network Interface (UNI) and the ACS Frame Relay Service Network.

   User-To-Network Information Transfer provides the physical entry point into the ACS Network for Access Links. The UNIT includes the associated port, unidirectional Permanent Virtual Connections (PVCs) and ACS Frame Relay switching equipment. UNIT PVCs are provisioned at customer-selected Committed Information Rates (CIRs), and at port speeds for 4-Wire of 56 or 64 kbps, 112 or 128 kbps, 224 or 256 kbps, 336 or 384 kbps, 448 or 512 kbps, 672 or 768 kbps, or 1.544 Mbps, or 44.736 Mbps and for 2-Wire 128 kbps depending upon the customer's data networking requirements. UNIT provides unidirectional polling between the customer's facilities and the ACS FRS Network. (M)

Certain material on this page formerly appeared on Page 8-14.
Certain material previously found on this page can now be found on Page 8-100.

8. ADVANCED COMMUNICATIONS NETWORKS

8.3 FRAME RELAY SERVICE (T)(M)

8.3.1 GENERAL

B. Service Elements (Cont'd) (T)

7. Network-To-Network Information Transfer (NNIT)

Available on a 4-Wire basis only, the Network-To-Network Information Transfer (NNIT) service element transfers information between the ACS Frame Relay Service Network and another frame relay network.

Network-To-Network Information Transfer provides the physical entry point into the ACS Network for Access Links. The NNIT includes the associated port, unidirectional Permanent Virtual Connections (PVCs) and ACS Frame Relay switching equipment. If the other frame relay service network's switch or facility is not in a location served by a Company serving wire center where an ACS FRS switch is located, private line transport charges will apply, at rates set forth in Section 7 of this Tariff. NNIT PVCs are provisioned at customer-selected Committed Information Rates (CIRs), and at port speeds, dependent upon the customer's data networking requirements.

NNIT provides bidirectional polling between the ACS FRS Network and another frame relay network. (M)

Certain material on this page formerly appeared on Page 8-15.
Certain material previously found on this page can now be found on Page 8-101.

8. ADVANCED COMMUNICATIONS NETWORKS

8.3 FRAME RELAY SERVICE (S-y)

8.3.1 GENERAL

B. Service Elements (Cont'd)

8. Permanent Virtual Connection (PVC)

A PVC is a unidirectional logical channel from one Frame Relay Port to another Frame Relay Port within the ACS Network. PVCs are provisioned at customer-selected port speeds, with customer-selected Committed Information Rates (CIRs), depending on the customer's data networking requirements.

Although higher numbers of PVCs may be provided, depending on an individual customer's traffic characteristics, the following are the recommended maximum numbers of PVCs for designated FRS port speeds:

4-WIRE FRS PORT SPEEDS	**RECOMMENDED NUMBER OF PVCS**	
56 or 64 kbps	30	
112 or 128 kbps	40	
224 or 256 kbps	80	
336 or 384 kbps	120	
448 or 512 kbps	125	
672 or 768 kbps	125	
1.544 Mbps	125	
44.736 Mbps	[1]	(S-y)

GRANDFATHERED (N)

2-WIRE FRS PORT SPEEDS	**RECOMMENDED NUMBER OF PVCS**	(S-y)
128 kbps	8	(S-y)

[1] The maximum number of PVCs, which may be associated with 44.736 Mbps is 500. (T-y) (S-y)

(y) Reissued matter filed under Transmittal No. 28, to become effective December 6, 2000.

(Filed under Transmittal 30.)

8. ADVANCED COMMUNICATIONS NETWORKS

8.3 FRAME RELAY SERVICE (T)(M)

8.3.1 GENERAL

B. Service Elements (Cont'd) (T)

9. Committed Information Rate (CIR)

Although FRS statistical multiplexing capabilities allow customers with FRS configurations to have aggregate PVC CIRs which are greater than the associated port speed, the actual throughput of aggregated PVC CIRs in use at any time on the same port cannot exceed the port speed.

A customer's data throughput may burst up to the customer's subscribed port speed; however, when data exceeds the CIR, the potential for discard exists. It is recommended that a customer subscribe to a CIR no greater than half the port speed; although, a larger CIR may be accommodated, as indicated below, depending on a specific customer's traffic characteristics.

The customer's CIR should closely match the Open System Interconnection (OSI) Model or equivalent Application and Network Layer protocols for the data application utilized.

CIR Options For Permanent Virtual Connections are delineated in PUB 77372. (M)

Certain material on this page formerly appeared on Pages 8-16 and 8-17.
Certain material previously found on this page can now be found on Pages 8-103 and 8-104.

8. ADVANCED COMMUNICATIONS NETWORKS

8.3 FRAME RELAY SERVICE (S-y)

8.3.1 GENERAL

B. Service Elements (Cont'd)

10. Central Office Connecting Channel (COCC)

When a customer accesses FRS via a private line transport facility which requires multiplexing to be compatible with FRS transmission speeds or requires port to port connectivity, the COCC provides the ongoing interconnection from the multiplexer or other Company facility port to an FRS port. The COCC provides connectivity up to 1.544 Mbps, or up to 44.736 Mbps.

11. Transport Channel

The Transport Channel provides for the transmission facilities between the serving wire center associated with the customer-designated premises and the FRS Service Point or FRS switch; or between an EICT or ITP and the FRS Service Point.

12. Optional Features and Functions (S-y)
(D-y)

a. Customer Network Management (CNM) (T-y)

The Customer Network Management (CNM) optional feature provides the customer with read-only access to information related to FRS faults, usage information, performance management functions and configurations. Customer-provided network management terminal equipment (e.g., workstation) is used to access CNM as delineated in Qwest Corporation Technical Publication PUB 77376. A PVC is used to access CNM in the Company's Public Data Network Control Center (PDNCC). The PVC is dedicated to the CNM feature but does not affect the total number of per port PVCs available to the customer. ACS network locations where CNM is available are designated in the National Exchange Carrier Association, Inc. Tariff F.C.C. No. 4. (S-y) (S-y)

(y) Reissued matter filed under Transmittal No. 28, to become effective December 6, 2000.

8. ADVANCED COMMUNICATIONS NETWORKS

8.3 FRAME RELAY SERVICE (S-y)

8.3.1 GENERAL

B.12. (Cont'd) (S-y)
(D-y)

b. Priority PVC (T-y)

Grandfathered Priority PVC assigns a higher transit priority to the customer's designated UNIT PVCs. During intermittent network congestion, frames with priority PVC will move ahead of the non-priority PVCs. This minimizes delay and lowers the probability for frame discards. (C-y) (S-y)

The Priority PVC Optional Feature is not available for 2-Wire 128 kbps Frame Relay Service. (S-y)

(y) Reissued matter filed under Transmittal No. 28, to become effective December 6, 2000.

8. ADVANCED COMMUNICATIONS NETWORKS

8.3 FRAME RELAY SERVICE (S-y)

8.3.1 GENERAL

B.12. (Cont'd) (S-y)

c. Fault Tolerant Service (T-y)

Grandfathered Fault Tolerant Service reroutes the customer's PVCs in the event of a service interruption at the customer's primary location. Upon notification by the customer that a service interruption has occurred, the PVCs will be rerouted to a backup UNIT. Upon notification by the customer that the service has been restored, the Company will reroute the customer's PVCs back to the primary service. Fault Tolerant Service can be used to backup one or more primary location, however, only one activation can occur at a time. The backup UNIT speed must be equal to or greater than the highest UNIT speed of the designated primary connection. Fault Tolerant Service is only available on speeds of 56/64 kbps, 1.544 Mbps, and/or 44.736 Mbps. (C-y) (S-y)

Fault Tolerant Service will be activated within 30 minutes of notification by the appropriate customer representative. If the service is not switched from the designated primary to the backup within that allotted time frame, the customer will pay one half of the normal activation fee for Fault Tolerant Service. (S-y)

(D-y)

(y) Reissued matter filed under Transmittal No. 28, to become effective December 6, 2000.

8. ADVANCED COMMUNICATIONS NETWORKS

8.3 FRAME RELAY SERVICE (T)(M)
8.3.1 GENERAL (Cont'd)

C. Service Configuration (T)

The following diagram is an example of a typical Frame Relay Service User-To-Network Interface (UNI) or Network-to-Network Interface (NNI) configuration.

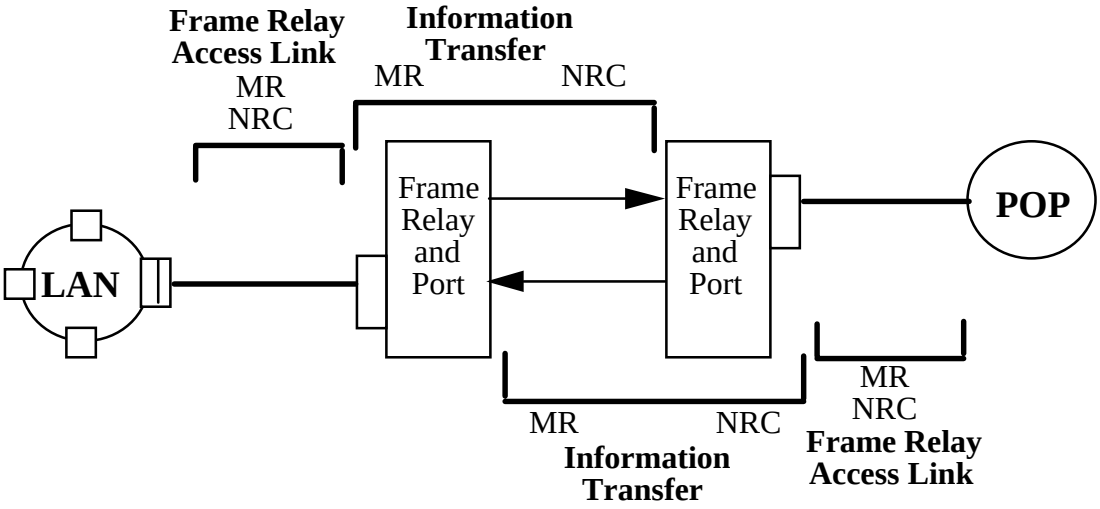

MR - Monthly Rate
NRC - Nonrecurring Charge

(M)

(D)

Certain material on this page formerly appeared on Page 8-21.
Certain material previously found on this page can now be found on Page 8-20.

8. ADVANCED COMMUNICATIONS NETWORKS

8.3 FRAME RELAY SERVICE (Cont'd) (T)(M)

8.3.2 REGULATIONS

A. General (T)

1. A customer may access Frame Relay Service via an FRS Access Link, or, in lieu of the FRS Access Link, a Private Line Transport 56 or 64 kbps interface or any 1.544 Mbps interface in Section 7 and/or Section 15, or an EICT DDS or EICT 1.544 Mbps or ITP 1.544 Mbps in Section 21. Regulations, rates and charges for Section 7 Channel Terminations, Transport Channels and Optional Features and Functions shall apply in addition to the regulations, rates and charges associated with the FRS. A customer utilizing Section 7 Private Line Transport Service Channel Termination or a EICT DDS, EICT 1.544 Mbps or ITP 1.544 Mbps from Section 21, in lieu of the FRS Access Link, would not incur the nonrecurring charge or monthly rate for a FRS Access Link, but would incur all other monthly rates and nonrecurring charges normally associated with the ordering, installing and provisioning of FRS, e.g., Information Transfer as set forth in this section.

2. A subsequent PVC order is required when a customer chooses to add PVC(s), change PVC assignments or change the CIR on an existing PVC after the initial port installation. One nonrecurring subsequent PVC order charge applies in addition to the nonrecurring charge for each subsequent PVC(s) ordered. When more than one PVC is ordered or changed on the same customer service configuration at the same time, only one subsequent order charge applies.

3. An FRS Access Link is available as a component of FRS or as a Stand-Alone Access Link offering which connects customer-premises facilities to frame relay service networks provided by service providers other than the Company. When a Stand-Alone Access Link is ordered, Transport Channel mileage may apply, as applicable, at rates set forth in Section 7. (M)

Certain material on this page formerly appeared on Page 8-43.
Certain material previously found on this page can now be found on Pages 8-21 and 8-22.

8. ADVANCED COMMUNICATIONS NETWORKS

Certain material previously found on this page can now be found on Page 8-23.

8. ADVANCED COMMUNICATIONS NETWORKS

8.3 FRAME RELAY SERVICE (T)(M)
8.3.2 REGULATIONS (Cont'd)

B. Obligations of the Customer (T)

In addition to the Obligations of the Customer in Section 2, the following regulations apply. Error correction is the responsibility of the customer's Frame Relay-compatible terminal equipment. FRS switches may discard frames with errors. They may also discard frames when the network supporting FRS is in a state of congestion. Congestion control and recovery mechanisms are as set forth in technical documents listed under "Reference to Technical Publications" in Section 0, preceding. (M)

Certain material on this page formerly appeared on Page 8-22.
Certain material previously found on this page can now be found on Page 8-304.

8. ADVANCED COMMUNICATIONS NETWORKS

8.3 FRAME RELAY SERVICE (Cont'd) (T)(M)

8.3.3 RATE ELEMENTS

A. Access Link (T)

A nonrecurring charge and monthly rate, based on the speed of the Access Link (i.e., 56 or 64 kbps, 2-Wire 128 kbps, or 1.544 Mbps), apply per Access Link for each physical connection to the network supporting FRS.

In lieu of an FRS Access Link, a Private Line Transport DS3 Service Channel Termination (CT) with Clear Channel Capability, as set forth in Section 7, is used to provide access to a 44.736 Mbps Information Transfer. The DS3 Service CT provides access to the ACS Frame Relay Network switch via a connection between customer facilities at the network interface and an Information Transfer. FRS switch locations are designated by the Company and are identified in the National Exchange Carrier Association, Inc. Tariff F.C.C. No. 4.

B. Stand-Alone Access Link (T)

A nonrecurring charge and a monthly rate, based on the speed of the Stand-Alone Access Link, apply per Stand-Alone Access Link for the physical connection between a customer's facilities and a frame relay service network provided by a service provider other than the Company. In addition to this rate element, PLTS Transport Channel mileage may apply, at the rates set forth in Section 7., preceding. (M)

Certain material on this page formerly appeared on Page 8-54.
Certain material previously found on this page can now be found on Page 8-305.

8. ADVANCED COMMUNICATIONS NETWORKS

8.3 FRAME RELAY SERVICE (T)(M)
8.3.3 RATE ELEMENTS (Cont'd)

C. Information Transfer (UNIT or NNIT) (T)

A monthly rate, based on the speed of the port and the number of PVCs assigned to the port, applies per port for each FRS Access Link or digital private line connection to the network supporting FRS. A "First PVC" nonrecurring charge applies for the first unidirectional PVC ordered on an FRS Port. An "Each Additional PVC" nonrecurring charge applies for each additional unidirectional PVC ordered on the same FRS Port as the first PVC. For subsequent installations (order request after initial installations), a subsequent nonrecurring order charge applies, in addition to the "Each Additional PVC" nonrecurring charge, when PVCs are added, PVC assignments are changed, or CIR is changed on an existing PVC. In addition, private line transport charges may apply for NNIT, as set forth in Section 7 of this Tariff.

D. Transport Channel (T)

The Transport Channel rate element provides for the transmission facilities between the serving wire center associated with the customer-designated premises and a FRS Service Point or an FRS Switch; or between an EICT or ITP and a FRS Service Point. The Transport Channel is portrayed in mileage bands. Two rates apply for each band -- a flat rate per band and a rate per mile. The sum of the two rates constitutes the Transport Channel rate element. The rates, set forth in Section 7, apply according to the speed of the Access Link (i.e., 56 kbps, 64 kbps, or 1.544 Mbps) or the speed of the Channel Termination (i.e., 56 kbps, 64 kbps, 1.544 Mbps, or 44.736 Mbps). (M)

Certain material on this page formerly appeared on Page 8-55.
Certain material previously found on this page can now be found on Page 8-24.

8. ADVANCED COMMUNICATIONS NETWORKS

8.3 FRAME RELAY SERVICE (S-y)
8.3.3 RATE ELEMENTS (Cont'd)

E. Central Office Connecting Channel (COCC)

A nonrecurring charge and a monthly rate apply per COCC connection between a multiplexer and a FRS Port or between a Company facility port and a FRS Port when used for port-to-port connectivity.

F. Optional Features and Functions (S-y)
(D-y)

1. Customer Network Management (T-y)

A monthly rate and a nonrecurring charge apply per customer-provided network management terminal equipment (workstation) designated to access the CNM optional feature. The customer must provide the Company with a registered address for each customer-provided workstation designated to access CNM. A nonrecurring charge applies for the initial setup of each workstation registered address designated to access CNM. A subsequent nonrecurring charge applies to change a workstation registered address in the CNM or to add CNM to existing FRS. When CNM is added to existing FRS, the subsequent nonrecurring charge applies, in addition to the initial setup nonrecurring charge. (S-y)

(D-y)

(y) Reissued matter filed under Transmittal No. 28, to become effective December 6, 2000.

8. ADVANCED COMMUNICATIONS NETWORKS

8.3 FRAME RELAY SERVICE (S-y)
8.3.3 RATE ELEMENTS

F. Optional Features and Functions (Cont'd) (S-y)

2. Priority PVC (Grandfathered) (C-y)

A nonrecurring charge applies per UNIT PVC to establish priority designation (S-y) and is in addition to the rates and charges for the UNIT PVCs with which priority is associated. A monthly rate, based on the speed of the UNIT, applies per Unit Priority PVC. (S-y)

3. Fault Tolerant Service (Grandfathered) (C-y)

A Frame Relay UNIT Initial Service Establishment nonrecurring charge applies (S-y) to establish Fault Tolerant Service. The UNIT speed must be equal to or greater than the highest UNIT speed of the designated primary connection (e.g., if the interuption occurs on a 1.544 Mbps UNIT, the backup UNIT must be 1.544 Mbps or greater). A Subsequent Service Establishment nonrecurring charge applies to add primary site(s) to a previously established Fault Tolerant backup. In addition, the Fault Tolerant Service UNIT monthly rate for a 56/64 kbps, 1.544 Mbps or 44.736 Mbps UNIT with 0 PVCs applies. A customer must also purchase access to the Frame Relay UNIT (e.g., an Access Link). When a customer request is received to activate the Fault Tolerant Service to reroute the customer's primary PVCs to the backup, then subsequently restore the service to the primary PVCs, one Activation and Restoral nonrecurring charge also applies. (S-y)

(D-y)

(y) Reissued matter filed under Transmittal No. 28, to become effective December 6, 2000.

8. ADVANCED COMMUNICATIONS NETWORKS

8.3 FRAME RELAY SERVICE (Cont'd) (S-y)

8.3.4 PRICING PLANS

A. General

FRS has two optional Pricing Plans: Fixed Period Service Rate Plan and Rate Stability Plan. The optional rate plans allow the FRS customer the assurance of no Company-initiated increases in rates during the fixed period.

1. Rate Stability Plan

FRS existing customers may have stabilized rates for fixed periods of 12 months, 24 months, 36 months, 48 months, 60 months, 72 months or 84 months at the rates listed in 8.4.2.A.

As of May 29, 1995, the Rate Stability Plan is no longer available for new subscribers. Existing RSP subscribers may retain RSP until the expiration of the existing term or until the customer disconnects the service. In this situation, a move to a different building does not constitute a disconnect of service.

2. Fixed Period Service Rate Plan

The FRS customer (except 2-Wire 128 kbps) may order this plan for 12 months, 24 months, 36 months, 48 months, 60 months, 72 months, or 84 months at the (S-y)
rates set forth in 8.3.5. Prior to the Grandfather date of December 26, 2000, the 2- (C-y)
Wire 128 kbps FRS customer could order this plan for 12 months, 36 months, or (S-y)
60 months at the rates set forth in 8.3.5. (S-y)

(y) Reissued matter filed under Transmittal No. 28, to become effective December 6, 2000.

8. ADVANCED COMMUNICATIONS NETWORKS

8.3 FRAME RELAY SERVICE (T)(M)
8.3.4 PRICING PLANS (Cont'd)

B. Terms and Conditions

1. Monthly rates for the entire fixed period will be frozen from Company-initiated increases, at the rates in effect for the fixed period on the service date. (T)

2. The customer must specify the length of the fixed period at the time the service is ordered. (T)

3. FRS rate elements may be ordered under monthly or any optional rate plan. For example, the customer may order the Access Link under the 36-month fixed period service rate plan and the Information Transfer under the 60-month fixed period service rate plan. (T) (T)

4. Customers with fixed period service established prior to September 1, 1998 receive rate decreases occurring during that fixed period. The reduced rates are automatically applied to the remaining term of the fixed period. (T)

5. Effective September 1, 1998, customers establishing a Fixed Period Rate Plan, will not receive a rate decrease if the Company decreases rates during the term of the plan. Fixed Period Rate Plans established on or before August 31, 1998, will automatically receive a rate decrease if the Company decreases rates during the term of the plan. (T) (M)

Certain material on this page formerly appeared on Page 8-71.
Certain material previously found on this page can now be found on Page 8-28.

8. ADVANCED COMMUNICATIONS NETWORKS

8.3 FRAME RELAY SERVICE (T)(M)

8.3.4 PRICING PLANS

B. Terms and Conditions (Cont'd)

6. At the end of the fixed period, the customer may select a new fixed period, convert to monthly rates or terminate the service. The rates will be those in effect (T) at the time the new fixed period begins. Should the customer fail to make a choice by the end of a fixed period, the service will automatically revert to the effective monthly (month-to-month) rates. If service is continued under the (T) pricing plans, nonrecurring charges will not apply.

7. The minimum service period for Rate Stability Plan is 3 months. The minimum (T) service period for Fixed Period Service Rate Plan is 6 months. When PVCs are added to an existing FRS, the minimum service period for the added PVCs is 1 (T) month. PVCs may be added to an existing fixed period on a month-to-month basis or under the same optional rate plan as the existing FRS but at the rates and charges in effect at the time of the addition, except when the PVCs are installed during the first 24 months of the customer's Pricing Plan as set forth in the Phased-In Installation Rates and Charges Regulations, following. (M)

Certain material on this page formerly appeared on Page 8-71.
Certain material previously found on this page can now be found on Page 8-29.

8. ADVANCED COMMUNICATIONS NETWORKS

Certain material previously found on this page can now be found on Page 8-30.

8. ADVANCED COMMUNICATIONS NETWORKS

Certain material previously found on this page can now be found on Page 8-31.

8. ADVANCED COMMUNICATIONS NETWORKS

Certain material previously found on this page can now be found on Page 8-32.

8. ADVANCED COMMUNICATIONS NETWORKS

8.3 FRAME RELAY SERVICE (T)(M)
8.3.4 PRICING PLANS

B. Terms and Conditions (Cont'd)

8. Phased-In Installation Rates and Charges Regulations (T)

For Pricing Plans in effective as of November 14, 1994, and for each individual customer's FRS ordered under a Pricing Plan since that date, the recurring rates and nonrecurring charges for rate elements installed or moved to a new building during the first 24 months of the customer's Pricing Plan, or 12 months for (T)
customer's who subscribe to the 12-month Plan, will be those rates in effect as of (T)
the installation date of the first rate element (unless a decrease in rates has occurred, in which case the lower rates will apply).

After the first 24 months of the Pricing Plan, or 12 months for customer's who (T)
subscribe to the 12-month Plan, FRS Access Links and Optional Features and (T)
Functions may be moved or added to an existing Pricing Plan using the original Pricing Plan establishment date; however, the rates and charges will be those in effect at the time of the move or addition. If the remaining number of months for
the existing term is less than either 3 months for an FRS Rate Stability Plan, or 6 (T)
months for an FRS Fixed Period Service Rate Plan, then the new service can be added as month-to-month until the expiration of the existing term or the new service can be added to the original Pricing Plan but the minimum period will be the minimum period designated by the type of Pricing Plan. (M)

Certain material on this page formerly appeared on Page 8-72.
Certain material previously found on this page can now be found on Pages 8-336 and 8-337.

8. ADVANCED COMMUNICATIONS NETWORKS

8.3 FRAME RELAY SERVICE (T)(M)
8.3.4 PRICING PLANS (Cont'd)

C. Changes in Rate Plans (T)

Services rated under the month-to-month plan or an existing fixed period service rate plan may be upgraded to a new fixed period service rate plan at any time the customer chooses without incurring nonrecurring charges, Discontinuance Charges or Termination Liability charges. This upgrade will be allowed provided the channel interface and the customer-designated premises remain the same. (T) Additionally, the new fixed period service rate plan must meet or exceed the fixed period service rate plan being upgraded.

The monthly rates will be those in effect at the time the new fixed period begins. New minimum service periods apply to upgrades in rate plan.

If a customer chooses to change an existing service provided under a fixed period service rate plan or a rate stability plan to a month-to-month plan, the change will be treated as a discontinuance of the existing service and an establishment of new service. Appropriate Discontinuance Charges, as set forth in E., following, or (T) Termination Liability as set forth in 8.1.5, and a new minimum period will apply in (T) addition to the new monthly rates for the service.

D. Changes in Transmission Speed (T)

1. Customers with the FRS Pricing Plan in service prior to May 29, 1995, may utilize Termination Liability and Waiver Policy as set forth in 8.1.5, in lieu of (T) Changes in Transmission Speed. This offer is valid until either the expiration date of their existing term or until May 29, 1996 for a 12-month term, May 29, (T) 1997 for a 24-month term, May 29, 1998 for a 36-month term, May 29, 2000 for a 60-month term, May 29, 2001 for a 72-month term and May 29, 2002 for a 84-month term, whichever comes first. After May 29, 1995 Termination Liability (T) and Waiver Policy will be in effect for all new customers subscribing to the FRS Pricing Plan. (M)

Certain material on this page formerly appeared on Page 8-73.
Certain material previously found on this page can now be found on Page 8-338.

8. ADVANCED COMMUNICATIONS NETWORKS

8.3 FRAME RELAY SERVICE (T)(M)

8.3.4 PRICING PLANS

D. Changes in Transmission Speed (Cont'd)

2. Should the customer choose to change the service provided under a fixed period service rate plan or a rate stability plan to an equal or greater transmission speed FRS or other Company service (e.g., 56 kbps FRS to 56 kbps Digital Data Service, 56 or 64 kbps FRS to 64 kbps Digital Data Service or to 1.544 Mbps FRS or DS1 Service), discontinuance charges will not apply, provided all the following conditions are met: (T)

   - Both the existing service and the new service are provided solely by the Company, (T)
   - The customer's request for disconnect of the existing service and the request for new connect of the new service are received at the same time,
   - The new service is provided between the same customer locations as the discontinued service, except as set forth in F., following, (T)
   - The new fixed period meets or exceeds the remaining length of the existing fixed period being discontinued[1], and
   - The total monthly rate of the new service is equal to or greater than the total monthly rate of the existing service.

3. All changes in transmission speed are subject to the availability of service. The monthly rates for the new service and/or service elements will be those rates in effect at the time the service is changed. Related nonrecurring charges apply for the change and are the charges in effect at the time the service is changed. (T)

4. Should the order to change transmission speed exclude one or more of the conditions above, it will be treated as a discontinuance of the existing service and the establishment of a new service. All outstanding minimum period charges and discontinuance charges, as set forth in E., following, will apply. (T) (T)

[1] On the effective date of this Tariff, RSP subscribers must change to a fixed period service rate plan, which meets or exceeds the remaining length of the existing RSP being discontinued. (T) (M)

Certain material on this page formerly appeared on Page 8-73 and 8-74.
Certain material previously found on this page can now be found on Page 8-339.

8. ADVANCED COMMUNICATIONS NETWORKS

8.3 FRAME RELAY SERVICE (T)(M)
8.3.4 PRICING PLANS (Cont'd)

E. Discontinuance of Service

Discontinuance charges apply if the customer chooses to discontinue all or a portion of the service, equaling more than 20% of the total monthly rate, prior to the expiration of the fixed period service. A minimum billing level of 80% of the (T) total monthly rates will be used to calculate discontinuance charges. The minimum billing level is based on the monthly rate as of the service established date, plus any additions to the service after the service established date.

Customers with the FRS Pricing Plan in service prior to May 29, 1995 may utilize (T) Termination Liability and Waiver Policy as set forth in 8.1.5, in lieu of Discontinuance Charges in 1., following. This offer is valid until either the expiration date of their existing term or until May 29, 1996 for a 12-month term, May 29, 1997 for a 24-month term, May 29, 1998 for a 36-month term, May 29, 1999 for a 48-month term, May 29, 2000 for a 60-month term, May 29, 2001 for a 72-month term and May 29, 2002 for a 84-month term, whichever comes first. After May 29, 1995, Termination Liability and Waiver Policy will be in effect for (T) all new customers subscribing to the FRS Pricing Plan. (M)

Certain material on this page formerly appeared on Page 8-75.
Certain material previously found on this page can now be found on Page 8-33.

8. ADVANCED COMMUNICATIONS NETWORKS

8.3 FRAME RELAY SERVICE (T)(M)

8.3.4 PRICING PLANS

E. Discontinuance of Service (Cont'd)

1. Rate Stability Plan

After May 29, 1995, the Rate Stability Plan is no longer available for new subscribers. (T)

Should the customer choose to discontinue service provided under the rate stability plan prior to the completion of the minimum service period of 3 months, a discontinuance charge will apply. The discontinuance charge is 80% (minimum billing level) of the total monthly rates for the remaining months of the minimum service period, plus 10% of the minimum billing level for the remaining term of the fixed period. (T)

Should the customer choose to discontinue the rate stability plan after the minimum service period but before the completion of the fixed period, a discontinuance charge equal to 10% of the minimum billing level for the remaining term of the fixed period will apply. For example, if a customer chooses to discontinue service after 33 months of a 60-month fixed period, the discontinuance charge will be .10 multiplied by 27 months, multiplied by the minimum billing level. (T) (M)

Certain material on this page formerly appeared on Page 8-75.
Certain material previously found on this page can now be found on Page 8-34.

8. ADVANCED COMMUNICATIONS NETWORKS

8.3 FRAME RELAY SERVICE (T)(M)
8.3.4 PRICING PLANS

E.1. (Cont'd) (T)

If, by discontinuing a portion of the service provided under a rate stability plan, a customer's total monthly billing level falls below the minimum billing level, which shall include any additions to the service, a discontinuance charge, as set forth preceding, will apply only to the portion of the service being discontinued.

2. Fixed Period Service Rate Plan (T)

Should the customer choose to discontinue fixed period service rate plan prior to the completion of the minimum service period of 6 months, discontinuance charges will apply. The discontinuance charge is 80% (minimum billing level) of the total monthly rates for the remaining months of the minimum service period, plus 40% of the minimum billing level for the remaining portion of the fixed period service. (T)

Should the customer choose to discontinue fixed period service rate plan after the minimum service period but before the completion of the fixed period, discontinuance charges will apply. Discontinuance charges equal to 40% of the minimum billing level for the remaining portion of the fixed period service will apply. For example, if a customer chooses to discontinue service after 33 months of a 60-month fixed period, the discontinuance charges would be 0.40 multiplied by 27 months, multiplied by the minimum billing level. (T)

If, by discontinuing a portion of the service provided under a fixed period service rate plan, a customer's total monthly billing level falls below the minimum billing level, which shall include any additions to the service, a discontinuance charge, as set forth preceding, will apply only to the portion of the service being discontinued. (M)

Certain material on this page formerly appeared on Page 8-76.
Certain material previously found on this page can now be found on Pages 8-35 and 8-36.

8. ADVANCED COMMUNICATIONS NETWORKS

8.3 FRAME RELAY SERVICE (T)(M)
8.3.4 PRICING PLANS
E.2. (Cont'd) (T)

If a customer chooses to change an existing service offered under a fixed period service rate plan to a rate stability plan or to a month-to-month plan, the change will be treated as a discontinuance of the existing service and an establishment of new service. Appropriate discontinuance charges, a new minimum period and (T) related nonrecurring charges for establishment of the new service will apply in (T) addition to the new monthly rates for the service.

3. Discontinuance charges do not apply to fixed period services purchased by local, (T) State or Federal government entities, or to customers who have purchased services solely for resale to local, State or Federal government entities, when they (T) are discontinued prior to the completion of the fixed period service only when all of the following conditions are met:

   - The service(s) purchased by the local, State or Federal government entity or by customers that have purchased services for resale to local, State or Federal government entities are utilized solely for provision of services for that local, State or Federal government entity,

   - Funding for the fixed period service ordered by the authorized local, State or Federal government entity is included in the budget request for each fiscal period appropriation sufficient to cover the authorized local, State or Federal government entity's obligations under the fixed period service for that fiscal period,

   - Nonappropriation may not be used as a means of terminating the service to acquire a functionally similar product or service, (M)

Certain material on this page formerly appeared on Page 8-77.
Certain material previously found on this page can now be found on Page 8-433.

8. ADVANCED COMMUNICATIONS NETWORKS

8.3 FRAME RELAY SERVICE (T)(M)
8.3.4 PRICING PLANS
E.3. (Cont'd) (T)

- The local, State or Federal government entity ordered the fixed period service under the good faith belief that moneys in amounts sufficient to discharge its obligations could and would lawfully be appropriated and be made available for this purpose and,

- The local, State or Federal government entity or the customer who ordered the service on their behalf, must provide the Company notarized documents agreed upon by both the Company and the customer, showing that the entity is allotted insufficient funds for the remainder of the then current fiscal period (or for a succeeding fiscal period) by appropriation, appropriation limitation or grant to continue payments under the fixed period service and has no other funding source lawfully available to it for such purpose. The fixed period service may be terminated by giving the Company not less than 30 days written notice. (T) Should the customer receive funding for the cancelled service prior to physical (T) disconnect of service, the customer may cancel the disconnect order per Section 5. Upon termination, the local, State or Federal government entity or (T) the customer who ordered the service on their behalf, shall pay all applicable rates and nonrecurring charges of the fixed period service incurred through the date of termination and through the end of the then current fiscal period to the extent of lawfully available funds. (M)

Certain material on this page formerly appeared on Page 8-78.
Certain material previously found on this page can now be found on Page 8-37.

8. ADVANCED COMMUNICATIONS NETWORKS

8.3 FRAME RELAY SERVICE (T)(M)
8.3.4 PRICING PLANS (Cont'd)

F. Moves to a Different Building Utilizing Portability (T)

Portability allows FRS ordered under a Pricing Plan to move to a different building without incurring discontinuance charges or establishing new minimum service periods. Applicable nonrecurring charges apply to move the service.

1. Portability without upgrade in transmission speed (T)

A customer with existing FRS may choose to move either a portion of or the entire existing service or move and change their FRS to another Company service without incurring discontinuance charges provided the following conditions are met:

- Both the existing and the new service are provided solely by the Company,
- The new service has a speed equal to the speed of the disconnected service,
- The customer's request for both the disconnect order for the existing service and the new connect order for the new service are received at the same time and must specifically reference the application of Portability,
- The customer's request for the disconnect order for the existing service must reference the new connect order, and
- The due date of the new connect order must be within 30 days of the due date of the disconnect order. (M)

Certain material on this page formerly appeared on Page 8-79.

8. ADVANCED COMMUNICATIONS NETWORKS

8.3 FRAME RELAY SERVICE (T)(M)
8.3.4 PRICING PLANS (T)

F.1. (Cont'd)

The monthly rates for the new service will be those rates in effect at the time the service is installed at the new location. All nonrecurring charges apply for the new service. Should changes to either the disconnect order or the new connect order for Portability exclude one or more of the conditions above, applicable discontinuance charges will be assessed. The rates, charges and regulations for changes from FRS to other Company services are as specified in other sections of this Tariff.

For FRS provided under VTPP, the existing term or fixed period may be utilized for the FRS at the new location, provided the remaining number of months of the existing term is at least the minimum period of the VTPP (i.e., three months for an FRS Rate Stability Plan, or six months for an FRS Fixed Period Service Rate Plan). If the remaining number of months for the existing term is less than the associated minimum period, then the remaining number of months for the existing term at the new location shall be extended to either three months for an FRS Rate Stability Plan, or six months for an FRS Fixed Period Service Rate Plan. (M)

Certain material on this page formerly appeared on Page 8-80.
Certain material previously found on this page can now be found on Page 8-5.

8. ADVANCED COMMUNICATIONS NETWORKS

8.3 FRAME RELAY SERVICE (T)(M)

8.3.4 PRICING PLANS

F. Moves to a Different Building Utilizing Portability (Cont'd)

2. Portability with upgrade in transmission speed

Customers with FRS Pricing Plans in service prior to May 29, 1995, may utilize Portability with upgrade in transmission speed until the end of their existing term, (T)
or may utilize the Termination Liability and Waiver Policy as set forth in 8.1.5, (T)
following. At the expiration of their existing Pricing Plan, the Termination Liability and Waiver Policy must be utilized for moves to a different building with an upgrade in transmission speed.

A customer with existing FRS may choose to move the existing service and upgrade to another higher speed FRS or to another higher speed service provided by the Company without incurring discontinuance charges provided the following conditions are met:

- Both the existing and the new services are provided solely by the Company,
- The customer's request for the disconnect order for the existing service and the new connect order for the new service are received at the same time and must specifically reference the application of Portability and upgrade in capacity,
- The customer's request for the disconnect order for the existing service must reference the new connect order, and
- The due date of the new connect order must be within 30 days of the due date of the disconnect order. (M)

Certain material on this page formerly appeared on Pages 8-80 and 8-81.
Certain material previously found on this page can now be found on Page 8-6.

8. ADVANCED COMMUNICATIONS NETWORKS

8.3 FRAME RELAY SERVICE (T)(M)
8.3.4 PRICING PLANS (T)

F.2. (Cont'd)

For FRS provided under Pricing Plans, the term or fixed period for the existing FRS may continue to be the same term for the FRS at the new location, provided the remaining number of months of the existing plan is at least the minimum period of the existing Pricing Plan (i.e., three months for an FRS Rate Stability Plan, or six months for an FRS Fixed Period Service Rate Plan). If the remaining number of months for the existing Pricing Plan is less than the associated minimum period, then the minimum period for the new service shall be three months for an FRS Rate Stability Plan, or six months for an FRS Fixed Period Service Rate Plan. (T)

The monthly rates for the new service will be those rates in effect at the time the new upgraded service is installed. Should changes to either the disconnect order or the new connect order for Portability exclude one or more of the conditions above, applicable discontinuance charges will be assessed. The rates, charges and regulations for changes from FRS to other Company services are as specified in other sections of this Tariff. (M)

Certain material on this page formerly appeared on Page 8-81.
Certain material previously found on this page can now be found on Pages 8-7 and 8-8.

8. ADVANCED COMMUNICATIONS NETWORKS

8.3 FRAME RELAY SERVICE (Cont'd) (S-y)

8.3.5 RATES AND CHARGES

A. Monthly (S-y)

Regulations for the Grandfathered services are set forth in 8.3.1.A. (N)

(S-y)

	USOC	NONRECURRING CHARGE	MONTHLY RATE
1. Access Link, per Access Link			
• 56 or 64 kbps	L7AXM	$450.00	$ 47.00
• 2-Wire 128 kbps	L7TAM	450.00	45.00
• 1.544 Mbps	L7AXM	450.00	126.50
2. Stand-Alone Access Link, per Access Link			
• 56 or 64 kbps	NNLXM	450.00	47.00
• 1.544 Mbps	NNLXM	450.00	126.50

3. User-To-Network Information Transfer (UNIT)

	USOC	NONRECURRING CHARGE
• 56 or 64 kbps		
- First PVC	NRBF1	$50.00
- Each additional PVC	NRBF2	20.00
- Subsequent PVC(s) order charge, per order[1]	NRBFO	75.00

[1] When appropriate, the "Each additional PVC" nonrecurring charge applies in addition to the "Subsequent PVC order charge". (S-y)

(y) Reissued matter filed under Transmittal No. 28, to become effective December 6, 2000.

8. ADVANCED COMMUNICATIONS NETWORKS

8.3 FRAME RELAY SERVICE (S-y)

8.3.5 RATES AND CHARGES

A. Monthly

3. User-To-Network Information Transfer (UNIT) (Cont'd)

	USOC	NONRECURRING CHARGE	
• 2-Wire 128 kbps (Grandfathered)			(C-y)
- First PVC	NRBF7	$300.00	(S-y)
- Each additional PVC	NRBF8	20.00	
- Subsequent PVC(s) order charge, per order[1]	NRBF9	75.00	
• 112 or 128 kbps (4-Wire), 224 or 256 kbps, 336 or 384 kbps, 448 or 512 kbps, and 672 or 768 kbps			
- First PVC	NRBF1	250.00	
- Each additional PVC	NRBF2	20.00	
- Subsequent PVC(s) order charge, per order[1]	NRBFO	75.00	
• 1.544 Mbps			
- First PVC	NRBF1	50.00	
- Each additional PVC	NRBF2	20.00	
- Subsequent PVC(s) order charge, per order[1]	NRBFO	75.00	

[1] When appropriate, the "Each additional PVC" nonrecurring charge applies in addition to the "Subsequent PVC order charge". (S-y)

(y) Reissued matter filed under Transmittal No. 28, to become effective December 6, 2000.

(Filed under Transmittal 30.)

8. ADVANCED COMMUNICATIONS NETWORKS

8.3 FRAME RELAY SERVICE (S-y)

8.3.5 RATES AND CHARGES

A. Monthly

3. User-To-Network Information Transfer (UNIT) (Cont'd)

	USOC	NONRECURRING CHARGE	
• 44.736 Mbps			
- First PVC	NRBF1	$250.00	
- Each additional PVC	NRBF2	50.00	
- Subsequent PVC(s) order charge, per order[1]	NRBFO	75.00	(S-y)
• Fault Tolerant Service (Grandfathered), per UNIT			(C-y) (S-y)
- Initial Service Establishment	NRBF4	500.00	
- Subsequent Service Establishment	NRBF5	50.00	
- Activation and Restoral	NRBF6	500.00	

[1] When appropriate, the "Each additional PVC" nonrecurring charge applies in addition to the "Subsequent PVC order charge". (S-y)

(y) Reissued matter filed under Transmittal No. 28, to become effective December 6, 2000.

(Filed under Transmittal 30.)

8. ADVANCED COMMUNICATIONS NETWORKS

8.3 FRAME RELAY SERVICE (T)(M)
8.3.5 RATES AND CHARGES
A. Monthly
3. User-To-Network Information Transfer (UNIT) (Cont'd) (T)

	USOC	MONTHLY RATE
• 56 or 64 kbps - UNIT, per Port		
- 0 PVCs, used with Fault Tolerant Service	17T9M	$ 35.00
- 1 PVC	17TAM	39.28
- 2 PVCs	17TBM	44.53
- 3 PVCs	17TCM	47.79
- 4 PVCs	17TDM	51.06
- 5 PVCs	17TEM	54.29
- 6 PVCs through 14[1], per PVC	17TGM	1.24
- 15 PVCs through 24[2], per PVC	17THM	0.27
- Each additional PVC over 24[3], per PVC	17TJM	0.25
• 2-Wire 128 kbps - UNIT, per Port		
- 1 PVC	18TBM	95.00
- 2 through 8 PVCs[4]	18TCM	8.30
• 112 or 128 kbps (4-Wire) - UNIT, per Port		
- 1 PVC	17TAM	120.00
- 2 PVCs	17TBM	123.00
- 3 PVCs	17TCM	126.00
- 4 PVCs	17TDM	129.00
- 5 PVCs	17TEM	132.00
- 6 PVCs through 14[1], per PVC	17TGM	1.20
- 15 PVCs through 24[2], per PVC	17THM	0.85
- Each additional PVC over 24[3], per PVC	17TJM	0.50

[1] For each PVC over 5, up to and including 14, add this rate to the monthly rate for 5 PVCs.
[2] For each PVC over 14, up to and including 24, add this rate to the total monthly rate for 14 PVCs.
[3] For each PVC over 24 add this rate to the total monthly rate for 24 PVCs.
[4] For each PVC over 1, up to and including 8, add this rate to the monthly rate for 1 PVCs. (M)

Certain material on this page formerly appeared on Page 8-129.
Certain material previously found on this page can now be found on Page 8-12.

8. ADVANCED COMMUNICATIONS NETWORKS

8.3 FRAME RELAY SERVICE (T)(M)

8.3.5 RATES AND CHARGES

A. Monthly

3. User-To-Network Information Transfer (UNIT) (Cont'd) (T)

	USOC	MONTHLY RATE
• 224 or 256 kbps - UNIT, per Port		
- 1 PVC	17TAM	$ 160.00
- 2 PVCs	17TBM	166.00
- 3 PVCs	17TCM	172.00
- 4 PVCs	17TDM	178.00
- 5 PVCs	17TEM	184.00
- 6 PVCs through 14[1], per PVC	17TGM	2.35
- 15 PVCs through 24[2], per PVC	17THM	1.65
- Each additional PVC over 24[3], per PVC	17TJM	0.50
• 336 or 384 kbps - UNIT, per Port		
- 1 PVC	17TAM	200.00
- 2 PVCs	17TBM	208.75
- 3 PVCs	17TCM	217.50
- 4 PVCs	17TDM	226.25
- 5 PVCs	17TEM	235.00
- 6 PVCs through 14[1], per PVC	17TGM	3.50
- 15 PVCs through 24[2], per PVC	17THM	2.50
- Each additional PVC over 24[3], per PVC	17TJM	0.50

[1] For each PVC over 5, up to and including 14, add this rate to the monthly rate for 5 PVCs.
[2] For each PVC over 14, up to and including 24, add this rate to the total monthly rate for 14 PVCs.
[3] For each PVC over 24 add this rate to the total monthly rate for 24 PVCs. (M)

Certain material on this page formerly appeared on Page 8-130.
Certain material previously found on this page can now be found on Page 8-13.

8. ADVANCED COMMUNICATIONS NETWORKS

8.3 FRAME RELAY SERVICE (T)(M)

8.3.5 RATES AND CHARGES

A. Monthly

3. User-To-Network Information Transfer (UNIT) (Cont'd) (T)

	USOC	MONTHLY RATE
• 448 or 512 kbps - UNIT, per Port		
- 1 PVC	17TAM	$235.00
- 2 PVCs	17TBM	244.50
- 3 PVCs	17TCM	254.00
- 4 PVCs	17TDM	263.50
- 5 PVCs	17TEM	273.00
- 6 PVCs through 14[1], per PVC	17TGM	3.75
- 15 PVCs through 24[2], per PVC	17THM	2.50
- Each additional PVC over 24[3], per PVC	17TJM	0.50
• 672 or 768 kbps - UNIT, per Port		
- 1 PVC	17TAM	310.00
- 2 PVCs	17TBM	324.00
- 3 PVCs	17TCM	338.00
- 4 PVCs	17TDM	352.00
- 5 PVCs	17TEM	366.00
- 6 PVCs through 14[1], per PVC	17TGM	4.00
- 15 PVCs through 24[2], per PVC	17THM	2.75
- Each additional PVC over 24[3], per PVC	17TJM	.85

[1] For each PVC over 5, up to and including 14, add this rate to the monthly rate for 5 PVCs.
[2] For each PVC over 14, up to and including 24, add this rate to the total monthly rate for 14 PVCs.
[3] For each PVC over 24 add this rate to the total monthly rate for 24 PVCs. (M)

Certain material on this page formerly appeared on Page 8-131.
Certain material previously found on this page can now be found on Page 8-14.

8. ADVANCED COMMUNICATIONS NETWORKS

8.3 FRAME RELAY SERVICE (T)(M)

8.3.5 RATES AND CHARGES

A. Monthly

3. User-To-Network Information Transfer (UNIT) (Cont'd) (T)

	USOC	MONTHLY RATE
• 1.544 Mbps - UNIT, per Port		
- 0 PVCs, used with Fault Tolerant Service	17T9M	$ 215.00
- 1 PVC	17TAM	240.00
- 2 PVCs	17TBM	277.00
- 3 PVCs	17TCM	314.00
- 4 PVCs	17TDM	351.00
- 5 PVCs	17TEM	388.00
- 6 PVCs through 14[1], per PVC	17TGM	19.00
- 15 PVCs through 24[2], per PVC	17THM	5.00
- Each additional PVC over 24[3], per PVC	17TJM	0.50
• 44.736 Mbps - UNIT, per Port		
- 0 PVCs, used with Fault Tolerant Service	17T9M	3,500.00
- 1 PVC	17TUM	3,800.00
- 2 PVCs through 50[4], per PVC	17TVM	30.00
- 51 PVCs through 140[5], per PVC	17TWM	8.00
- 141 PVCs through 240[6], per PVC	17TYM	4.00
- 241 PVCs through 500[7], per PVC	17TZM	2.00

[1] For each PVC over 5, up to and including 14, add this rate to the monthly rate for 5 PVCs.
[2] For each PVC over 14, up to and including 24, add this rate to the total monthly rate for 14 PVCs.
[3] For each PVC over 24 add this rate to the total monthly rate for 24 PVCs.
[4] For each PVC over 1, up to and including 50, add this rate to the monthly rate for 1 PVC.
[5] For each PVC over 50, up to and including 140, add this rate to the total monthly rate for 50 PVCs.
[6] For each PVC over 140, up to and including 240, add this rate to the total monthly rate for 140 PVCs.
[7] For each PVC over 240, up to and including 500, add this rate to the total monthly rate for 240 PVCs. (M)

Certain material on this page formerly appeared on Page 8-132.
Certain material previously found on this page can now be found on Page 8-15.

8. ADVANCED COMMUNICATIONS NETWORKS

8.3 FRAME RELAY SERVICE (T)(M)
8.3.5 RATES AND CHARGES
A. Monthly (Cont'd)

4. Network-To-Network Information Transfer (NNIT) (T)

	USOC	NONRECURRING CHARGE
• 56 or 64 kbps		
- First PVC	NRBF1	$ 50.00
- Each additional PVC	NRBF2	20.00
- Subsequent PVC(s) order charge, per order[1]	NRBFO	75.00
• 112 or 128 kbps, 224 or 256 kbps, 336 or 384 kbps, 448 or 512 kbps, and 672 or 768 kbps		
- First PVC	NRBF1	250.00
- Each additional PVC	NRBF2	20.00
- Subsequent PVC(s) order charge, per order[1]	NRBFO	75.00
• 1.544 Mbps		
- First PVC	NRBF1	50.00
- Each additional PVC	NRBF2	20.00
- Subsequent PVC(s) order charge, per order[1]	NRBFO	75.00

[1] When appropriate, the “Each additional PVC” nonrecurring charge applies in addition to the “Subsequent PVC order charge”. (M)

Certain material on this page formerly appeared on Page 8-133.
Certain material previously found on this page can now be found on Page 8-16.

8. ADVANCED COMMUNICATIONS NETWORKS

8.3 FRAME RELAY SERVICE (T)(M)

8.3.5 RATES AND CHARGES

A. Monthly

4. Network-To-Network Information Transfer (NNIT) (Cont'd) (T)

	USOC	NONRECURRING CHARGE
• 44.736 Mbps		
- First PVC	NRBF1	$250.00
- Each additional PVC	NRBF2	50.00
- Subsequent PVC(s) order charge, per order[1]	NRBFO	75.00

[1] When appropriate, the "Each additional PVC" nonrecurring charge applies in addition to the "Subsequent PVC order charge". (M)

Certain material on this page formerly appeared on Page 8-133.1.
Certain material previously found on this page can now be found on Page 8-17.

8. ADVANCED COMMUNICATIONS NETWORKS

8.3 FRAME RELAY SERVICE (T)(M)

8.3.5 RATES AND CHARGES

A. Monthly

4. Network-To-Network Information Transfer (NNIT) (Cont'd) (T)

	USOC	MONTHLY RATE
• 56 or 64 kbps - NNIT, per Port		
- 1 PVC	17TAM	$38.00
- 2 PVCs	17TBM	42.35
- 3 PVCs	17TCM	46.70
- 4 PVCs	17TDM	51.05
- 5 PVCs	17TEM	55.40
- 6 PVCs through 14[1], per PVC	17TGM	0.50
- 15 PVCs through 24[2], per PVC	17THM	0.30
- Each additional PVC over 24[3], per PVC	17TJM	0.25
• 112 or 128 kbps - NNIT, per Port		
- 1 PVC	17TAM	85.00
- 2 PVCs	17TBM	88.00
- 3 PVCs	17TCM	91.00
- 4 PVCs	17TDM	94.00
- 5 PVCs	17TEM	97.00
- 6 PVCs through 14[1], per PVC	17TGM	1.20
- 15 PVCs through 24[2], per PVC	17THM	0.85
- Each additional PVC over 24[3], per PVC	17TJM	0.50

[1] For each PVC over 5, up to and including 14, add this rate to the monthly rate for 5 PVCs.
[2] For each PVC over 14, up to and including 24, add this rate to the total monthly rate for 14 PVCs.
[3] For each PVC over 24 add this rate to the total monthly rate for 24 PVCs. (M)

Certain material on this page formerly appeared on Page 8-134.
Certain material previously found on this page can now be found on Page 8-61.

8. ADVANCED COMMUNICATIONS NETWORKS

8.3 FRAME RELAY SERVICE (T)(M)

8.3.5 RATES AND CHARGES

A. Monthly

4. Network-To-Network Information Transfer (NNIT) (Cont'd) (T)

	USOC	MONTHLY RATE
• 224 or 256 kbps - NNIT, per Port		
- 1 PVC	17TAM	$125.00
- 2 PVCs	17TBM	131.00
- 3 PVCs	17TCM	137.00
- 4 PVCs	17TDM	143.00
- 5 PVCs	17TEM	149.00
- 6 PVCs through 14[1], per PVC	17TGM	2.35
- 15 PVCs through 24[2], per PVC	17THM	1.65
- Each additional PVC over 24[3], per PVC	17TJM	0.50
• 336 or 384 kbps - NNIT, per Port		
- 1 PVC	17TAM	170.00
- 2 PVCs	17TBM	178.75
- 3 PVCs	17TCM	187.50
- 4 PVCs	17TDM	196.25
- 5 PVCs	17TEM	205.00
- 6 PVCs through 14[1], per PVC	17TGM	3.50
- 15 PVCs through 24[2], per PVC	17THM	2.50
- Each additional PVC over 24[3], per PVC	17TJM	0.50

[1] For each PVC over 5, up to and including 14, add this rate to the monthly rate for 5 PVCs.
[2] For each PVC over 14, up to and including 24, add this rate to the total monthly rate for 14 PVCs.
[3] For each PVC over 24 add this rate to the total monthly rate for 24 PVCs. (M)

Certain material on this page formerly appeared on Page 8-135.
Certain material previously found on this page can now be found on Page 8-62.

8. ADVANCED COMMUNICATIONS NETWORKS

8.3 FRAME RELAY SERVICE (T)(M)

8.3.5 RATES AND CHARGES

A. Monthly

4. Network-To-Network Information Transfer (NNIT) (Cont'd) (T)

	USOC	MONTHLY RATE
• 448 or 512 kbps - NNIT, per Port		
- 1 PVC	17TAM	$205.00
- 2 PVCs	17TBM	214.50
- 3 PVCs	17TCM	224.00
- 4 PVCs	17TDM	233.50
- 5 PVCs	17TEM	243.00
- 6 PVCs through 14[1], per PVC	17TGM	3.75
- 15 PVCs through 24[2], per PVC	17THM	2.50
- Each additional PVC over 24[3], per PVC	17TJM	0.50
• 672 or 768 kbps - NNIT, per Port		
- 1 PVC	17TAM	280.00
- 2 PVCs	17TBM	293.00
- 3 PVCs	17TCM	306.00
- 4 PVCs	17TDM	319.00
- 5 PVCs	17TEM	332.00
- 6 PVCs through 14[1], per PVC	17TGM	3.75
- 15 PVCs through 24[2], per PVC	17THM	2.50
- Each additional PVC over 24[3], per PVC	17TJM	0.50

[1] For each PVC over 5, up to and including 14, add this rate to the monthly rate for 5 PVCs.
[2] For each PVC over 14, up to and including 24, add this rate to the total monthly rate for 14 PVCs.
[3] For each PVC over 24 add this rate to the total monthly rate for 24 PVCs. (M)

Certain material on this page formerly appeared on Page 8-136.
Certain material previously found on this page can now be found on Page 8-63.

8. ADVANCED COMMUNICATIONS NETWORKS

8.3 FRAME RELAY SERVICE (T)(M)
8.3.5 RATES AND CHARGES
A. Monthly
4. Network-To-Network Information Transfer (NNIT) (Cont'd) (T)

	USOC	MONTHLY RATE
• 1.544 Mbps - NNIT, per Port		
- 1 PVC	17TAM	$210.00
- 2 PVCs	17TBM	247.00
- 3 PVCs	17TCM	284.00
- 4 PVCs	17TDM	321.00
- 5 PVCs	17TEM	358.00
- 6 PVCs through 14[1], per PVC	17TGM	19.00
- 15 PVCs through 24[2], per PVC	17THM	5.00
- Each additional PVC over 24[3], per PVC	17TJM	0.50
• 44.736 Mbps - NNIT, per Port		
- 1 PVC	17TUM	3,800.00
- 2 PVCs through 50[4], per PVC	17TVM	30.00
- 51 PVCs through 140[5], per PVC	17TWM	8.00
- 141 PVCs through 240[6], per PVC	17TYM	4.00
- 241 PVCs through 500[7], per PVC	17TZM	2.00

[1] For each PVC over 5, up to and including 14, add this rate to the monthly rate for 5 PVCs.
[2] For each PVC over 14, up to and including 24, add this rate to the total monthly rate for 14 PVCs.
[3] For each PVC over 24 add this rate to the total monthly rate for 24 PVCs.
[4] For each PVC over 1, up to and including 50, add this rate to the monthly rate for 1 PVC.
[5] For each PVC over 50, up to and including 140, add this rate to the total monthly rate for 50 PVCs.
[6] For each PVC over 140, up to and including 240, add this rate to the total monthly rate for 140 PVCs. (M)
[7] For each PVC over 240, up to and including 500, add this rate to the total monthly rate for 240 PVCs.

Certain material on this page formerly appeared on Page 8-137.
Certain material previously found on this page can now be found on Page 8-64.

8. ADVANCED COMMUNICATIONS NETWORKS

8.3 FRAME RELAY SERVICE (T)(M)
8.3.5 RATES AND CHARGES
A. Monthly (Cont'd) (T)

	USOC	NONRECURRING CHARGE	MONTHLY RATE	
5. Central Office Connecting Channel				
• Per connection between a Multiplexer and FRS Port or between another Company facility port and an FRS Port				
- For speeds up to 1.544 Mbps	CU5RR	$25.00	$ 0.65	
- For speeds up to 44.736 Mbps	CU5RR	50.00	10.00	
6. Transport Channels	N/A	[1]	[1]	(T)

[1] See Section 7 for Transport Channel rates and regulations. (M)

Certain material on this page formerly appeared on Page 8-138.
Certain material previously found on this page can now be found on Pages 8-65 and 8-66.

8. ADVANCED COMMUNICATIONS NETWORKS

8.3 FRAME RELAY SERVICE (S-y)

8.3.5 RATES AND CHARGES

A. Monthly (Cont'd)

	USOC	NONRECURRING CHARGE	MONTHLY RATE	
7. Optional Features and Functions				(S-y) (D-y)
• Customer Network Management (CNM)				(S-y)
- Per workstation registered address initial setup	NM6XM	$15.00	$67.00	(S-y) (T-y)
- Subsequent CNM order charge, per workstation registered address change or addition of CNM to existing FRS[1]	NR9FM	38.00	–	(S-y)

[1] When adding CNM to existing FRS, the Subsequent CNM Order Charge applies in addition to the Nonrecurring Charge for the initial setup of CNM. (S-y)

(y) Reissued matter filed under Transmittal No. 28, to become effective December 6, 2000.

8. ADVANCED COMMUNICATIONS NETWORKS

8.3 FRAME RELAY SERVICE (S-y)

8.3.5 RATES AND CHARGES

A. Monthly

7. Optional Features and Functions (Cont'd) (S-y)
(D-y)

	USOC	NONRECURRING CHARGE	MONTHLY RATE	(S-y)
• Priority UNIT PVC[1] (Grandfathered), per PVC				(S-y) (C-y)
- 56 or 64 kbps	PV7XM	$50.00	$ 5.00	(S-y)
- 112 or 128 kbps	PV7XM	50.00	5.83	
- 224 or 256 kbps	PV7XM	50.00	6.67	
- 336 or 384 kbps	PV7XM	50.00	7.50	
- 448 or 512 kbps	PV7XM	50.00	8.33	
- 672 or 768 kbps	PV7XM	50.00	9.17	
- 1.544 Mbps	PV7XM	50.00	10.00	
- 44.736 Mbps	PV7XM	50.00	10.00	

[1] Priority PVC rates and charges apply in addition to the UNIT PVC rates and charges set forth preceding. (S-y)

(y) Reissued matter filed under Transmittal No. 28, to become effective December 6, 2000.

8. ADVANCED COMMUNICATIONS NETWORKS

8.3 FRAME RELAY SERVICE (S-y)
8.3.5 RATES AND CHARGES (Cont'd) (S-y)

(D-y)

(y) Reissued matter filed under Transmittal No. 28, to become effective December 6, 2000.

(Filed under Transmittal 30.)

8. ADVANCED COMMUNICATIONS NETWORKS

8.3 FRAME RELAY SERVICE (T)(M)
8.3.5 RATES AND CHARGES (Cont'd) (T)

B. 12 Months

	USOC	NONRECURRING CHARGE	MONTHLY RATE
1. Access Link, per Access Link			
• 56 or 64 kbps	L7AX1	$450.00	$ 44.65
• 2-Wire 128 kbps	L7TA1	450.00	40.50
• 1.544 Mbps	L7AX1	450.00	120.18
2. Stand-Alone Access Link per Access Link			
• 56 or 64 kbps	NNLX1	450.00	44.65
• 1.544 Mbps	NNLX1	450.00	120.18

3. User-To-Network Information Transfer (UNIT)

	USOC	NONRECURRING CHARGE
• 56 or 64 kbps		
- First PVC	NRBF1	$50.00
- Each additional PVC	NRBF2	20.00
- Subsequent PVC(s) order charge, per order[1]	NRBFO	75.00

[1] When appropriate, the "Each additional PVC" nonrecurring charge applies in addition to the "Subsequent PVC order charge". (M)

Certain material on this page formerly appeared on Page 8-141.
Certain material previously found on this page can now be found on Page 8-70.

8. ADVANCED COMMUNICATIONS NETWORKS

8.3 FRAME RELAY SERVICE (S-y)

8.3.5 RATES AND CHARGES

B. 12 Months

3. User-To-Network Information Transfer (UNIT) (Cont'd)

	USOC	NONRECURRING CHARGE	
• 2-Wire 128 kbps (Grandfathered)			(C-y)
- First PVC	NRBF7	$300.00	(S-y)
- Each additional PVC	NRBF8	20.00	
- Subsequent PVC(s) order charge, per order[1]	NRBF9	75.00	
• 112 or 128 kbps (4-Wire), 224 or 256 kbps, 336 or 384 kbps, 448 or 512 kbps, and 672 or 768 kbps			
- First PVC	NRBF1	250.00	
- Each additional PVC	NRBF2	20.00	
- Subsequent PVC(s) order charge, per order[1]	NRBFO	75.00	

[1] When appropriate, the "Each additional PVC" nonrecurring charge applies in addition to the "Subsequent PVC order charge". (S-y)

(y) Reissued matter filed under Transmittal No. 28, to become effective December 6, 2000.

8. ADVANCED COMMUNICATIONS NETWORKS

8.3 FRAME RELAY SERVICE (S-y)

8.3.5 RATES AND CHARGES

B. 12 Months

3. User-To-Network Information Transfer (UNIT) (Cont'd)

	USOC	NONRECURRING CHARGE
• 1.544 Mbps		
- First PVC	NRBF1	$ 50.00
- Each additional PVC	NRBF2	20.00
- Subsequent PVC(s) order charge, per order[1]	NRBFO	75.00
• 44.736 Mbps		
- First PVC	NRBF1	250.00
- Each additional PVC	NRBF2	50.00
- Subsequent PVC(s) order charge, per order[1]	NRBFO	75.00 (S-y)
• Fault Tolerant Service (Grandfathered), per UNIT		(C-y) (S-y)
- Initial Service Establishment	NRBF4	500.00
- Subsequent Service Establishment	NRBF5	50.00
- Activation and Restoral	NRBF6	500.00

[1] When appropriate, the "Each additional PVC" nonrecurring charge applies in addition to the "Subsequent PVC order charge". (S-y)

(y) Reissued matter filed under Transmittal No. 28, to become effective December 6, 2000.

8. ADVANCED COMMUNICATIONS NETWORKS

8.3 FRAME RELAY SERVICE (S-y)

8.3.5 RATES AND CHARGES

B. 12 Months

3. User-To-Network Information Transfer (UNIT) (Cont'd)

	USOC	MONTHLY RATE	
• 56 or 64 kbps - UNIT, per Port			
- 0 PVCs, used with Fault Tolerant Service	17T91	$ 33.25	
- 1 PVC	17TA1	37.32	
- 2 PVCs	17TB1	42.30	
- 3 PVCs	17TC1	45.40	
- 4 PVCs	17TD1	48.51	
- 5 PVCs	17TE1	51.58	
- 6 PVCs through 14[1], per PVC	17TG1	1.18	
- 15 PVCs through 24[2], per PVC	17TH1	0.26	
- Each additional PVC over 24[3], per PVC	17TJ1	0.25	(S-y)
• 2-Wire 128 kbps – UNIT (Grandfathered), per Port			(C-y) (S-y)
- 1 PVC	18TB1	85.50	
- 2 through 8 PVCs[4]	18TC1	7.47	

[1] For each PVC over 5, up to and including 14, add this rate to the monthly rate for 5 PVCs.
[2] For each PVC over 14, up to and including 24, add this rate to the total monthly rate for 14 PVCs.
[3] For each PVC over 24 add this rate to the total monthly rate for 24 PVCs.
[4] For each PVC over 1, up to and including 8, add this rate to the monthly rate for 1 PVCs. (S-y)

(y) Reissued matter filed under Transmittal No. 28, to become effective December 6, 2000.

8. ADVANCED COMMUNICATIONS NETWORKS

8.3 FRAME RELAY SERVICE (T)(M)

8.3.5 RATES AND CHARGES

B. 12 Months

3. User-To-Network Information Transfer (UNIT) (Cont'd) (T)

	USOC	MONTHLY RATE	
• 112 or 128 kbps (4Wire) - UNIT, per Port			
- 1 PVC	17TA1	$114.00	(T)
- 2 PVCs	17TB1	116.85	
- 3 PVCs	17TC1	119.70	
- 4 PVCs	17TD1	122.55	
- 5 PVCs	17TE1	125.40	
- 6 PVCs through 14[1], per PVC	17TG1	1.15	
- 15 PVCs through 24[2], per PVC	17TH1	0.80	
- Each additional PVC over 24[3], per PVC	17TJ1	0.50	

[1] For each PVC over 5, up to and including 14, add this rate to the monthly rate for 5 PVCs.

[2] For each PVC over 14, up to and including 24, add this rate to the total monthly rate for 14 PVCs.

[3] For each PVC over 24 add this rate to the total monthly rate for 24 PVCs. (M)

Certain material on this page formerly appeared on Page 8-143.
Certain material previously found on this page can now be found on Page 8-106.

8. ADVANCED COMMUNICATIONS NETWORKS

8.3 FRAME RELAY SERVICE (T)(M)

8.3.5 RATES AND CHARGES

B. 12 Months

3. User-To-Network Information Transfer (UNIT) (Cont'd) (T)

	USOC	MONTHLY RATE
• 224 or 256 kbps - UNIT, per Port		
- 1 PVC	17TA1	$152.00
- 2 PVCs	17TB1	157.70
- 3 PVCs	17TC1	163.40
- 4 PVCs	17TD1	169.10
- 5 PVCs	17TE1	174.80
- 6 PVCs through 14[1], per PVC	17TG1	2.25
- 15 PVCs through 24[2], per PVC	17TH1	1.55
- Each additional PVC over 24[3], per PVC	17TJ1	0.50
• 336 or 384 kbps - UNIT, per Port		
- 1 PVC	17TA1	190.00
- 2 PVCs	17TB1	198.30
- 3 PVCs	17TC1	206.65
- 4 PVCs	17TD1	214.95
- 5 PVCs	17TE1	223.25
- 6 PVCs through 14[1], per PVC	17TG1	3.35
- 15 PVCs through 24[2], per PVC	17TH1	2.40
- Each additional PVC over 24[3], per PVC	17TJ1	0.50

[1] For each PVC over 5, up to and including 14, add this rate to the monthly rate for 5 PVCs.
[2] For each PVC over 14, up to and including 24, add this rate to the total monthly rate for 14 PVCs.
[3] For each PVC over 24 add this rate to the total monthly rate for 24 PVCs. (M)

Certain material on this page formerly appeared on Page 8-144.
Certain material previously found on this page can now be found on Pages 8-107 and 8-108.

8. ADVANCED COMMUNICATIONS NETWORKS

8.3 FRAME RELAY SERVICE (T)(M)

8.3.5 RATES AND CHARGES

B. 12 Months

3. User-To-Network Information Transfer (UNIT) (Cont'd) (T)

	USOC	MONTHLY RATE
• 448 or 512 kbps - UNIT, per Port		
- 1 PVC	17TA1	$223.25
- 2 PVCs	17TB1	232.30
- 3 PVCs	17TC1	241.30
- 4 PVCs	17TD1	250.35
- 5 PVCs	17TE1	259.35
- 6 PVCs through 14[1], per PVC	17TG1	3.55
- 15 PVCs through 24[2], per PVC	17TH1	2.40
- Each additional PVC over 24[3], per PVC	17TJ1	0.50
• 672 or 768 kbps - UNIT, per Port		
- 1 PVC	17TA1	294.50
- 2 PVCs	17TB1	307.80
- 3 PVCs	17TC1	321.10
- 4 PVCs	17TD1	334.40
- 5 PVCs	17TE1	347.70
- 6 PVCs through 14[1], per PVC	17TG1	3.80
- 15 PVCs through 24[2], per PVC	17TH1	2.60
- Each additional PVC over 24[3], per PVC	17TJ1	0.80

[1] For each PVC over 5, up to and including 14, add this rate to the monthly rate for 5 PVCs.
[2] For each PVC over 14, up to and including 24, add this rate to the total monthly rate for 14 PVCs.
[3] For each PVC over 24 add this rate to the total monthly rate for 24 PVCs. (M)

Certain material on this page formerly appeared on Page 8-145.
Certain material previously found on this page can now be found on Page 8-109.

8. ADVANCED COMMUNICATIONS NETWORKS

8.3 FRAME RELAY SERVICE (T)(M)

8.3.5 RATES AND CHARGES

B. 12 Months

3. User-To-Network Information Transfer (UNIT) (Cont'd) (T)

	USOC	MONTHLY RATE
• 1.544 Mbps - UNIT, per Port		
- 0 PVCs, used with Fault Tolerant Service	17T91	$ 204.25
- 1 PVC	17TA1	228.00
- 2 PVCs	17TB1	263.15
- 3 PVCs	17TC1	298.30
- 4 PVCs	17TD1	333.45
- 5 PVCs	17TE1	368.60
- 6 PVCs through 14[1], per PVC	17TG1	18.05
- 15 PVCs through 24[2], per PVC	17TH1	4.75
- Each additional PVC over 24[3], per PVC	17TJ1	0.50

[1] For each PVC over 5, up to and including 14, add this rate to the monthly rate for 5 PVCs.

[2] For each PVC over 14, up to and including 24, add this rate to the total monthly rate for 14 PVCs.

[3] For each PVC over 24 add this rate to the total monthly rate for 24 PVCs. (M)

Certain material on this page formerly appeared on Page 8-146
Certain material previously found on this page can now be found on Page 8-110.

8. ADVANCED COMMUNICATIONS NETWORKS

8.3 FRAME RELAY SERVICE (T)(M)

8.3.5 RATES AND CHARGES

B. 12 Months

3. User-To-Network Information Transfer (UNIT) (Cont'd) (T)

	USOC	MONTHLY RATE	
• 44.736 Mbps - UNIT, per Port			
- 0 PVCs, used with Fault Tolerant Service	17T91	$3,325.00	(T)
- 1 PVC	17TU1	3,610.00	
- 2 PVCs through 50[1], per PVC	17TV1	28.50	(T)
- 51 PVCs through 140[2], per PVC	17TW1	7.60	
- 141 PVCs through 240[3], per PVC	17TY1	3.80	
- 241 PVCs through 500[4], per PVC	17TZ1	1.90	

[1] For each PVC over 1, up to and including 50, add this rate to the monthly rate for 1 PVC. (T)

[2] For each PVC over 50, up to and including 140, add this rate to the total monthly rate for 50 PVCs. (T)

[3] For each PVC over 140, up to and including 240, add this rate to the total monthly rate for 140 PVCs. (T)

[4] For each PVC over 240, up to and including 500, add this rate to the total monthly rate for 240 PVCs. (T) (M)

Certain material on this page formerly appeared on Page 8-146
Certain material previously found on this page can now be found on Page 8-111.

8. ADVANCED COMMUNICATIONS NETWORKS

8.3 FRAME RELAY SERVICE (T)(M)
8.3.5 RATES AND CHARGES
B. 12 Months (Cont'd) (T)

4. Network-To-Network Information Transfer (NNIT)

	USOC	NONRECURRING CHARGE
• 56 or 64 kbps		
- First PVC	NRBF1	$ 50.00
- Each additional PVC	NRBF2	20.00
- Subsequent PVC(s) order charge, per order[1]	NRBFO	75.00
• 112 or 128 kbps, 224 or 256 kbps, 336 or 384 kbps, 448 or 512 kbps, and 672 or 768 kbps		
- First PVC	NRBF1	250.00
- Each additional PVC	NRBF2	20.00
- Subsequent PVC(s) order charge, per order[1]	NRBFO	75.00
• 1.544 Mbps		
- First PVC	NRBF1	50.00
- Each additional PVC	NRBF2	20.00
- Subsequent PVC(s) order charge, per order[1]	NRBFO	75.00

[1] When appropriate, the "Each additional PVC" nonrecurring charge applies in addition to the "Subsequent PVC order charge". (M)

Certain material on this page formerly appeared on Page 8-147.
Certain material previously found on this page can now be found on Page 8-112.

8. ADVANCED COMMUNICATIONS NETWORKS

8.3 FRAME RELAY SERVICE (T)(M)

8.3.5 RATES AND CHARGES

B. 12 Months

4. Network-To-Network Information Transfer (NNIT) (Cont'd) (T)

	USOC	NONRECURRING CHARGE
• 44.736 Mbps		
- First PVC	NRBF1	$250.00
- Each additional PVC	NRBF2	50.00
- Subsequent PVC(s) order charge, per order[1]	NRBFO	75.00

[1] When appropriate, the "Each additional PVC" nonrecurring charge applies in addition to the "Subsequent PVC order charge". (M)

Certain material on this page formerly appeared on Page 8-147.1.
Certain material previously found on this page can now be found on Page 8-113.

8. ADVANCED COMMUNICATIONS NETWORKS

Certain material previously found on this page can now be found on Page 8-114.

8. ADVANCED COMMUNICATIONS NETWORKS

8.3 FRAME RELAY SERVICE (T)(M)

8.3.5 RATES AND CHARGES

B. Monthly

4. Network-To-Network Information Transfer (NNIT) (Cont'd) (T)

	USOC	MONTHLY RATE
• 56 or 64 kbps - NNIT, per Port		
- 1 PVC	17TA1	$36.10
- 2 PVCs	17TB1	40.25
- 3 PVCs	17TC1	44.35
- 4 PVCs	17TD1	48.50
- 5 PVCs	17TE1	52.65
- 6 PVCs through 14[1], per PVC	17TG1	0.50
- 15 PVCs through 24[2], per PVC	17TH1	0.30
- Each additional PVC over 24[3], per PVC	17TJ1	0.25
• 112 or 128 kbps - NNIT, per Port		
- 1 PVC	17TA1	80.75
- 2 PVCs	17TB1	83.60
- 3 PVCs	17TC1	86.45
- 4 PVCs	17TD1	89.30
- 5 PVCs	17TE1	92.15
- 6 PVCs through 14[1], per PVC	17TG1	1.15
- 15 PVCs through 24[2], per PVC	17TH1	0.80
- Each additional PVC over 24[3], per PVC	17TJ1	0.50

[1] For each PVC over 5, up to and including 14, add this rate to the monthly rate for 5 PVCs.
[2] For each PVC over 14, up to and including 24, add this rate to the total monthly rate for 14 PVCs.
[3] For each PVC over 24 add this rate to the total monthly rate for 24 PVCs. (M)

Certain material on this page formerly appeared on Page 8-148.
Certain material previously found on this page can now be found on Page 8-115.

8. ADVANCED COMMUNICATIONS NETWORKS

8.3 FRAME RELAY SERVICE (T)(M)

8.3.5 RATES AND CHARGES

B. Monthly

4. Network-To-Network Information Transfer (NNIT) (Cont'd) (T)

	USOC	MONTHLY RATE
• 224 or 256 kbps - NNIT, per Port		
- 1 PVC	17TA1	$118.75
- 2 PVCs	17TB1	124.45
- 3 PVCs	17TC1	130.15
- 4 PVCs	17TD1	135.85
- 5 PVCs	17TE1	141.55
- 6 PVCs through 14[1], per PVC	17TG1	2.25
- 15 PVCs through 24[2], per PVC	17TH1	1.55
- Each additional PVC over 24[3], per PVC	17TJ1	0.50
• 336 or 384 kbps - NNIT, per Port		
- 1 PVC	17TA1	161.50
- 2 PVCs	17TB1	169.80
- 3 PVCs	17TC1	178.15
- 4 PVCs	17TD1	186.45
- 5 PVCs	17TE1	194.75
- 6 PVCs through 14[1], per PVC	17TG1	3.35
- 15 PVCs through 24[2], per PVC	17TH1	2.40
- Each additional PVC over 24[3], per PVC	17TJ1	0.50

[1] For each PVC over 5, up to and including 14, add this rate to the monthly rate for 5 PVCs.
[2] For each PVC over 14, up to and including 24, add this rate to the total monthly rate for 14 PVCs.
[3] For each PVC over 24 add this rate to the total monthly rate for 24 PVCs. (M)

Certain material on this page formerly appeared on Page 8-149.
Certain material previously found on this page can now be found on Page 8-116.

8. ADVANCED COMMUNICATIONS NETWORKS

8.3 FRAME RELAY SERVICE (T)(M)

8.3.5 RATES AND CHARGES

B. Monthly

4. Network-To-Network Information Transfer (NNIT) (Cont'd) (T)

	USOC	MONTHLY RATE
• 448 or 512 kbps - NNIT, per Port		
- 1 PVC	17TA1	$194.75
- 2 PVCs	17TB1	203.80
- 3 PVCs	17TC1	212.80
- 4 PVCs	17TD1	221.85
- 5 PVCs	17TE1	230.85
- 6 PVCs through 14[1], per PVC	17TG1	3.55
- 15 PVCs through 24[2], per PVC	17TH1	2.40
- Each additional PVC over 24[3], per PVC	17TJ1	0.50
• 672 or 768 kbps - NNIT, per Port		
- 1 PVC	17TA1	266.00
- 2 PVCs	17TB1	278.35
- 3 PVCs	17TC1	290.70
- 4 PVCs	17TD1	303.05
- 5 PVCs	17TE1	315.40
- 6 PVCs through 14[1], per PVC	17TG1	3.55
- 15 PVCs through 24[2], per PVC	17TH1	2.40
- Each additional PVC over 24[3], per PVC	17TJ1	0.50

[1] For each PVC over 5, up to and including 14, add this rate to the monthly rate for 5 PVCs.
[2] For each PVC over 14, up to and including 24, add this rate to the total monthly rate for 14 PVCs.
[3] For each PVC over 24 add this rate to the total monthly rate for 24 PVCs. (M)

Certain material on this page formerly appeared on Page 8-150.
Certain material previously found on this page can now be found on Page 8-117.

8. ADVANCED COMMUNICATIONS NETWORKS

8.3 FRAME RELAY SERVICE (T)(M)

8.3.5 RATES AND CHARGES

B. 12 Months

4. Network-To-Network Information Transfer (NNIT) (Cont'd) (T)

	USOC	MONTHLY RATE
• 1.544 Mbps - NNIT, per Port		
- 1 PVC	17TA1	$ 199.50
- 2 PVCs	17TB1	234.65
- 3 PVCs	17TC1	269.80
- 4 PVCs	17TD1	304.95
- 5 PVCs	17TE1	340.10
- 6 PVCs through 14[1], per PVC	17TG1	18.05
- 15 PVCs through 24[2], per PVC	17TH1	4.75
- Each additional PVC over 24[3], per PVC	17TJ1	0.50

1] For each PVC over 5, up to and including 14, add this rate to the monthly rate for 5 PVCs.

[2] For each PVC over 14, up to and including 24, add this rate to the total monthly rate for 14 PVCs.

[3] For each PVC over 24 add this rate to the total monthly rate for 24 PVCs. (M)

Certain material on this page formerly appeared on Page 8-151.
Certain material previously found on this page can now be found on Page 8-118.

8. ADVANCED COMMUNICATIONS NETWORKS

8.3 FRAME RELAY SERVICE (T)(M)

8.3.5 RATES AND CHARGES

B. 12 Months

4. Network-To-Network Information Transfer (NNIT) (Cont'd) (T)

	USOC	MONTHLY RATE	
• 44.736 Mbps - NNIT, per Port			
- 1 PVC	17TU1	$3,610.00	(T)
- 2 PVCs through 50[1], per PVC	17TV1	28.50	
- 51 PVCs through 140[2], per PVC	17TW1	7.60	
- 141 PVCs through 240[3], per PVC	17TY1	3.80	
- 241 PVCs through 500[4], per PVC	17TZ1	1.90	

[1] For each PVC over 1, up to and including 50, add this rate to the monthly rate for 1 PVC. (T)

[2] For each PVC over 50, up to and including 140, add this rate to the total monthly rate for 50 PVCs. (T)

[3] For each PVC over 140, up to and including 240, add this rate to the total monthly rate for 140 PVCs. (T)

[4] For each PVC over 240, up to and including 500, add this rate to the total monthly rate for 240 PVCs. (T) (M)

Certain material on this page formerly appeared on Page 8-151.
Certain material previously found on this page can now be found on Pages 8-119 and 8-120.

8. ADVANCED COMMUNICATIONS NETWORKS

8.3 FRAME RELAY SERVICE (T)(M)
8.3.5 RATES AND CHARGES (T)
B. 12 Months (Cont'd)

	USOC	NONRECURRING CHARGE	MONTHLY RATE	
5. Central Office Connecting Channel				
• Per connection between a Multiplexer and FRS Port or between a Company facility port and an FRS Port				
- For speeds up to 1.544 Mbps	CU5SR	$25.00	$0.62	
- For speeds up to 44.736 Mbps	CU5SR	50.00	9.50	
6. Transport Channels	N/A	[1]	[1]	(T)

[1] See Section 7 for Transport Channel rates and regulations. (M)

Certain material on this page formerly appeared on Page 8-152.
Certain material previously found on this page can now be found on Page 8-121.

8. ADVANCED COMMUNICATIONS NETWORKS

8.3 FRAME RELAY SERVICE (T)(M)
8.3.5 RATES AND CHARGES (T)
B. 12 Months (Cont'd)

	USOC	NONRECURRING CHARGE	MONTHLY RATE	
7. Optional Features and Functions				
• Customer Network Management (CNM)				
- Per workstation registered address initial setup	NM6X1	15.00	$63.65	(T)
- Subsequent CNM order charge, per workstation registered address change or addition of CNM to existing FRS[1]	NR9FM	38.00	–	(T)

[1] When adding CNM to existing FRS, the Subsequent CNM Order Charge applies in addition to the Nonrecurring Charge for the initial setup of CNM. (T) (M)

Certain material on this page formerly appeared on Page 8-152.
Certain material previously found on this page can now be found on Page 8-122.

8. ADVANCED COMMUNICATIONS NETWORKS

8.3 FRAME RELAY SERVICE (S-y)

8.3.5 RATES AND CHARGES

B. 12 Months

7. Optional Features and Functions(Cont'd)

	USOC	NONRECURRING CHARGE	MONTHLY RATE	
• Priority UNIT PVC[1] (Grandfathered), per PVC				(S-y) (C-y)
- 56 or 64 kbps	PV7X1	$50.00	$4.75	(S-y)
- 112 or 128 kbps	PV7X1	50.00	5.54	
- 224 or 256 kbps	PV7X1	50.00	6.34	
- 336 or 384 kbps	PV7X1	50.00	7.13	
- 448 or 512 kbps	PV7X1	50.00	7.91	
- 672 or 768 kbps	PV7X1	50.00	8.71	
- 1.544 Mbps	PV7X1	50.00	9.50	
- 44.736 Mbps	PV7X1	50.00	9.50	

[1] Priority PVC rates and charges apply in addition to the UNIT PVC rates and charges set forth preceding. (S-y)

(y) Reissued matter filed under Transmittal No. 28, to become effective December 6, 2000.

8. ADVANCED COMMUNICATIONS NETWORKS

8.3 FRAME RELAY SERVICE (S-y)
8.3.5 RATES AND CHARGES (Cont'd) (T-y)

(D-y)

(y) Reissued matter filed under Transmittal No. 28, to become effective December 6, 2000.

8. ADVANCED COMMUNICATIONS NETWORKS

8.3 FRAME RELAY SERVICE (T)(M)
8.3.5 RATES AND CHARGES (Cont'd) (T)

C. 24 Months

	USOC	NONRECURRING CHARGE	MONTHLY RATE
1. Access Link, per Access Link			
• 56 or 64 kbps	L7AX2	$450.00	$ 44.05
• 1.544 Mbps	L7AX2	450.00	118.59
2. Stand-Alone Access Link per Access Link			
• 56 or 64 kbps	NNLX2	450.00	44.05
• 1.544 Mbps	NNLX2	450.00	118.59

3. User-To-Network Information Transfer (UNIT)

	USOC	NONRECURRING CHARGE
• 56 or 64 kbps		
- First PVC	NRBF1	$50.00
- Each additional PVC	NRBF2	20.00
- Subsequent PVC(s) order charge, per order[1]	NRBFO	75.00

[1] When appropriate, the "Each additional PVC" nonrecurring charge applies in addition to the "Subsequent PVC order charge". (M)

Certain material on this page formerly appeared on Page 8-155.
Certain material previously found on this page can now be found on Pages 8-126 and 8-127.

8. ADVANCED COMMUNICATIONS NETWORKS

8.3 FRAME RELAY SERVICE (T)(M)
8.3.5 RATES AND CHARGES
C. 24 Months
3. User-To-Network Information Transfer (UNIT) (Cont'd) (T)

	USOC	NONRECURRING CHARGE
• 112 or 128 kbps, 224 or 256 kbps, 336 or 384 kbps, 448 or 512 kbps, and 672 or 768 kbps		
- First PVC	NRBF1	$250.00
- Each additional PVC	NRBF2	20.00
- Subsequent PVC(s) order charge, per order[1]	NRBFO	75.00
• 1.544 Mbps		
- First PVC	NRBF1	50.00
- Each additional PVC	NRBF2	20.00
- Subsequent PVC(s) order charge, per order[1]	NRBFO	75.00

[1] When appropriate, the "Each additional PVC" nonrecurring charge applies in addition to the "Subsequent PVC order charge". (M)

Certain material on this page formerly appeared on Page 8-156.
Certain material previously found on this page can now be found on Page 8-128.

8. ADVANCED COMMUNICATIONS NETWORKS

8.3 FRAME RELAY SERVICE (S-y)

8.3.5 RATES AND CHARGES

C. 24 Months

3. User-To-Network Information Transfer (UNIT) (Cont'd)

	USOC	NONRECURRING CHARGE	
• 44.736 Mbps			
- First PVC	NRBF1	$250.00	
- Each additional PVC	NRBF2	50.00	
- Subsequent PVC(s) order charge, per order[1]	NRBFO	75.00	(S-y)
• Fault Tolerant Service (Grandfathered), per UNIT			(C-y) (S-y)
- Initial Service Establishment	NRBF4	500.00	
- Subsequent Service Establishment	NRBF5	50.00	
- Activation and Restoral	NRBF6	500.00	

[1] When appropriate, the "Each additional PVC" nonrecurring charge applies in addition to the "Subsequent PVC order charge". (S-y)

(y) Reissued matter filed under Transmittal No. 28, to become effective December 6, 2000.

(Filed under Transmittal 30.)

8. ADVANCED COMMUNICATIONS NETWORKS

8.3 FRAME RELAY SERVICE (T)(M)

8.3.5 RATES AND CHARGES

C. 24 Months

3. User-To-Network Information Transfer (UNIT) (Cont'd) (T)

	USOC	MONTHLY RATE
• 56 or 64 kbps - UNIT, per Port		
- 0 PVCs, used with Fault Tolerant Service	17T92	$ 32.81
- 1 PVC	17TA2	36.83
- 2 PVCs	17TB2	41.75
- 3 PVCs	17TC2	44.80
- 4 PVCs	17TD2	47.87
- 5 PVCs	17TE2	50.90
- 6 PVCs through 14[1], per PVC	17TG2	1.16
- 15 PVCs through 24[2], per PVC	17TH2	0.25
- Each additional PVC over 24[3], per PVC	17TJ2	0.25
• 112 or 128 kbps - UNIT, per Port		
- 1 PVC	17TA2	112.50
- 2 PVCs	17TB2	115.30
- 3 PVCs	17TC2	118.15
- 4 PVCs	17TD2	120.95
- 5 PVCs	17TE2	123.75
- 6 PVCs through 14[1], per PVC	17TG2	1.15
- 15 PVCs through 24[2], per PVC	17TH2	0.80
- Each additional PVC over 24[3], per PVC	17TJ2	0.45

[1] For each PVC over 5, up to and including 14, add this rate to the monthly rate for 5 PVCs.

[2] For each PVC over 14, up to and including 24, add this rate to the total monthly rate for 14 PVCs.

[3] For each PVC over 24 add this rate to the total monthly rate for 24 PVCs. (M)

Certain material on this page formerly appeared on Page 8-157.
Certain material previously found on this page can now be found on Pages 8-130 and 8-131.

8. ADVANCED COMMUNICATIONS NETWORKS

8.3 FRAME RELAY SERVICE (T)(M)

8.3.5 RATES AND CHARGES

C. 24 Months

3. User-To-Network Information Transfer (UNIT) (Cont'd) (T)

	USOC	MONTHLY RATE
• 224 or 256 kbps - UNIT, per Port		
- 1 PVC	17TA2	$150.00
- 2 PVCs	17TB2	155.65
- 3 PVCs	17TC2	161.25
- 4 PVCs	17TD2	166.90
- 5 PVCs	17TE2	172.50
- 6 PVCs through 14[1], per PVC	17TG2	2.20
- 15 PVCs through 24[2], per PVC	17TH2	1.55
- Each additional PVC over 24[3], per PVC	17TJ2	0.45
• 336 or 384 kbps - UNIT, per Port		
- 1 PVC	17TA2	187.50
- 2 PVCs	17TB2	195.70
- 3 PVCs	17TC2	203.90
- 4 PVCs	17TD2	212.10
- 5 PVCs	17TE2	220.30
- 6 PVCs through 14[1], per PVC	17TG2	3.30
- 15 PVCs through 24[2], per PVC	17TH2	2.35
- Each additional PVC over 24[3], per PVC	17TJ2	0.45

[1] For each PVC over 5, up to and including 14, add this rate to the monthly rate for 5 PVCs.
[2] For each PVC over 14, up to and including 24, add this rate to the total monthly rate for 14 PVCs.
[3] For each PVC over 24 add this rate to the total monthly rate for 24 PVCs. (M)

Certain material on this page formerly appeared on Page 8-158.
Certain material previously found on this page can now be found on Page 8-132.

8. ADVANCED COMMUNICATIONS NETWORKS

Certain material previously found on this page can now be found on Page 8-133.

8. ADVANCED COMMUNICATIONS NETWORKS

8.3 FRAME RELAY SERVICE (T)(M)

8.3.5 RATES AND CHARGES

C. 24 Months

3. User-To-Network Information Transfer (UNIT) (Cont'd) (T)

	USOC	MONTHLY RATE
• 448 or 512 kbps - UNIT, per Port		
- 1 PVC	17TA2	$220.30
- 2 PVCs	17TB2	229.20
- 3 PVCs	17TC2	238.15
- 4 PVCs	17TD2	247.05
- 5 PVCs	17TE2	255.95
- 6 PVCs through 14[1], per PVC	17TG2	3.50
- 15 PVCs through 24[2], per PVC	17TH2	2.35
- Each additional PVC over 24[3], per PVC	17TJ2	0.45
• 672 or 768 kbps - UNIT, per Port		
- 1 PVC	17TA2	290.65
- 2 PVCs	17TB2	303.75
- 3 PVCs	17TC2	316.90
- 4 PVCs	17TD2	330.00
- 5 PVCs	17TE2	343.15
- 6 PVCs through 14[1], per PVC	17TG2	3.75
- 15 PVCs through 24[2], per PVC	17TH2	2.60
- Each additional PVC over 24[3], per PVC	17TJ2	0.80

[1] For each PVC over 5, up to and including 14, add this rate to the monthly rate for 5 PVCs.
[2] For each PVC over 14, up to and including 24, add this rate to the total monthly rate for 14 PVCs.
[3] For each PVC over 24 add this rate to the total monthly rate for 24 PVCs. (M)

Certain material on this page formerly appeared on Page 8-159.
Certain material previously found on this page can now be found on Page 8-132.

8. ADVANCED COMMUNICATIONS NETWORKS

8.3 FRAME RELAY SERVICE (T)(M)

8.3.5 RATES AND CHARGES

C. 24 Months

3. User-To-Network Information Transfer (UNIT) (Cont'd) (T)

	USOC	MONTHLY RATE
• 1.544 Mbps - UNIT, per Port		
- 0 PVCs, used with Fault Tolerant Service	17T92	$ 201.56
- 1 PVC	17TA2	225.00
- 2 PVCs	17TB2	259.70
- 3 PVCs	17TC2	294.40
- 4 PVCs	17TD2	329.05
- 5 PVCs	17TE2	363.75
- 6 PVCs through 14[1], per PVC	17TG2	17.80
- 15 PVCs through 24[2], per PVC	17TH2	4.70
- Each additional PVC over 24[3], per PVC	17TJ2	0.45

[1] For each PVC over 5, up to and including 14, add this rate to the monthly rate for 5 PVCs.
[2] For each PVC over 14, up to and including 24, add this rate to the total monthly rate for 14 PVCs.
[3] For each PVC over 24 add this rate to the total monthly rate for 24 PVCs. (M)

Certain material on this page formerly appeared on Page 8-160.
Certain material previously found on this page can now be found on Page 8-135.

8. ADVANCED COMMUNICATIONS NETWORKS

8.3 FRAME RELAY SERVICE (T)(M)

8.3.5 RATES AND CHARGES

C. 24 Months

3. User-To-Network Information Transfer (UNIT) (Cont'd) (T)

	USOC	MONTHLY RATE	
• 44.736 Mbps - UNIT, per Port			
- 0 PVCs, used with Fault Tolerant Service	17T92	$3,281.25	(T)
- 1 PVC	17TU2	3,562.50	
- 2 PVCs through 50[1], per PVC	17TV2	28.13	(T)
- 51 PVCs through 140[2], per PVC	17TW2	7.50	
- 141 PVCs through 240[3], per PVC	17TY2	3.75	
- 241 PVCs through 500[4], per PVC	17TZ2	1.88	

[1] For each PVC over 1, up to and including 50, add this rate to the monthly rate for 1 PVC. (T)

[2] For each PVC over 50, up to and including 140, add this rate to the total monthly rate for 50 PVCs. (T)

[3] For each PVC over 140, up to and including 240, add this rate to the total monthly rate for 140 PVCs. (T)

[4] For each PVC over 240, up to and including 500, add this rate to the total monthly rate for 240 PVCs. (T) (M)

Certain material on this page formerly appeared on Page 8-160.
Certain material previously found on this page can now be found on Page 8-136.

8. ADVANCED COMMUNICATIONS NETWORKS

8.3 FRAME RELAY SERVICE (T)(M)
8.3.5 RATES AND CHARGES (T)

C. 24 Months (Cont'd)

4. Network-To-Network Information Transfer (NNIT)

	USOC	NONRECURRING CHARGE
• 56 or 64 kbps		
- First PVC	NRBF1	$ 50.00
- Each additional PVC	NRBF2	20.00
- Subsequent PVC(s) order charge, per order[1]	NRBFO	75.00
• 112 or 128 kbps, 224 or 256 kbps, 336 or 384 kbps, 448 or 512 kbps, and 672 or 768 kbps		
- First PVC	NRBF1	250.00
- Each additional PVC	NRBF2	20.00
- Subsequent PVC(s) order charge, per order[1]	NRBFO	75.00
• 1.544 Mbps		
- First PVC	NRBF1	50.00
- Each additional PVC	NRBF2	20.00
- Subsequent PVC(s) order charge, per order[1]	NRBFO	75.00

[1] When appropriate, the "Each additional PVC" nonrecurring charge applies in addition to the "Subsequent PVC order charge". (M)

Certain material on this page formerly appeared on Page 8-161.
Certain material previously found on this page can now be found on Pages 8-137 and 8-138.

8. ADVANCED COMMUNICATIONS NETWORKS

8.3 FRAME RELAY SERVICE (T)(M)

8.3.5 RATES AND CHARGES

C. 24 Months

4. Network-To-Network Information Transfer (NNIT) (Cont'd) (T)

	USOC	NONRECURRING CHARGE
• 44.736 Mbps		
- First PVC	NRBF1	$250.00
- Each additional PVC	NRBF2	50.00
- Subsequent PVC(s) order charge, per order[1]	NRBFO	75.00

[1] When appropriate, the "Each additional PVC" nonrecurring charge applies in addition to the "Subsequent PVC order charge". (M)

Certain material on this page formerly appeared on Page 8-161.1.
Certain material previously found on this page can now be found on Pages 8-139 and 8-140.

8. ADVANCED COMMUNICATIONS NETWORKS

8.3 FRAME RELAY SERVICE (T)(M)

8.3.5 RATES AND CHARGES

C. 24 Months

4. Network-To-Network Information Transfer (NNIT) (Cont'd) (T)

	USOC	MONTHLY RATE
• 56 or 64 kbps - NNIT, per Port		
- 1 PVC	17TA2	$35.65
- 2 PVCs	17TB2	39.70
- 3 PVCs	17TC2	43.80
- 4 PVCs	17TD2	47.85
- 5 PVCs	17TE2	51.95
- 6 PVCs through 14[1], per PVC	17TG2	0.45
- 15 PVCs through 24[2], per PVC	17TH2	0.30
- Each additional PVC over 24[3], per PVC	17TJ2	0.25

[1] For each PVC over 5, up to and including 14, add this rate to the monthly rate for 5 PVCs.

[2] For each PVC over 14, up to and including 24, add this rate to the total monthly rate for 14 PVCs.

[3] For each PVC over 24 add this rate to the total monthly rate for 24 PVCs. (M)

Certain material on this page formerly appeared on Page 8-162.
Certain material previously found on this page can now be found on Page 8-141.

8. ADVANCED COMMUNICATIONS NETWORKS

8.3 FRAME RELAY SERVICE (T)(M)

8.3.5 RATES AND CHARGES

C. 24 Months

4. Network-To-Network Information Transfer (NNIT) (Cont'd) (T)

	USOC	MONTHLY RATE	
• 112 or 128 kbps - NNIT, per Port			
- 1 PVC	17TA2	$79.70	(T)
- 2 PVCs	17TB2	82.50	
- 3 PVCs	17TC2	85.30	
- 4 PVCs	17TD2	88.15	
- 5 PVCs	17TE2	90.95	
- 6 PVCs through 14[1], per PVC	17TG2	1.15	
- 15 PVCs through 24[2], per PVC	17TH2	0.80	
- Each additional PVC over 24[3], per PVC	17TJ2	0.45	

[1] For each PVC over 5, up to and including 14, add this rate to the monthly rate for 5 PVCs.

[2] For each PVC over 14, up to and including 24, add this rate to the total monthly rate for 14 PVCs.

[3] For each PVC over 24 add this rate to the total monthly rate for 24 PVCs. (M)

Certain material on this page formerly appeared on Page 8-162.
Certain material previously found on this page can now be found on Page 8-142.

8. ADVANCED COMMUNICATIONS NETWORKS

8.3 FRAME RELAY SERVICE (T)(M)

8.3.5 RATES AND CHARGES

C. 24 Months

4. Network-To-Network Information Transfer (NNIT) (Cont'd) (T)

	USOC	MONTHLY RATE
• 224 or 256 kbps - NNIT, per Port		
- 1 PVC	17TA2	$117.20
- 2 PVCs	17TB2	122.80
- 3 PVCs	17TC2	128.45
- 4 PVCs	17TD2	134.05
- 5 PVCs	17TE2	139.70
- 6 PVCs through 14[1], per PVC	17TG2	2.20
- 15 PVCs through 24[2], per PVC	17TH2	1.55
- Each additional PVC over 24[3], per PVC	17TJ2	0.45

[1] For each PVC over 5, up to and including 14, add this rate to the monthly rate for 5 PVCs.

[2] For each PVC over 14, up to and including 24, add this rate to the total monthly rate for 14 PVCs.

[3] For each PVC over 24 add this rate to the total monthly rate for 24 PVCs. (M)

Certain material on this page formerly appeared on Page 8-163.
Certain material previously found on this page can now be found on Page 8-143.

8. ADVANCED COMMUNICATIONS NETWORKS

8.3 FRAME RELAY SERVICE (T)(M)

8.3.5 RATES AND CHARGES

C. 24 Months

4. Network-To-Network Information Transfer (NNIT) (Cont'd) (T)

	USOC	MONTHLY RATE	
• 336 or 384 kbps - NNIT, per Port			
- 1 PVC	17TA2	$159.40	(T)
- 2 PVCs	17TB2	167.60	
- 3 PVCs	17TC2	175.80	
- 4 PVCs	17TD2	184.00	
- 5 PVCs	17TE2	192.20	
- 6 PVCs through 14[1], per PVC	17TG2	3.30	
- 15 PVCs through 24[2], per PVC	17TH2	2.35	
- Each additional PVC over 24[3], per PVC	17TJ2	0.45	

[1] For each PVC over 5, up to and including 14, add this rate to the monthly rate for 5 PVCs.
[2] For each PVC over 14, up to and including 24, add this rate to the total monthly rate for 14 PVCs.
[3] For each PVC over 24 add this rate to the total monthly rate for 24 PVCs. (M)

Certain material on this page formerly appeared on Page 8-163.
Certain material previously found on this page can now be found on Pages 8-144 and 8-145.

8. ADVANCED COMMUNICATIONS NETWORKS

8.3 FRAME RELAY SERVICE (T)(M)

8.3.5 RATES AND CHARGES

C. 24 Months

4. Network-To-Network Information Transfer (NNIT) (Cont'd) (T)

	USOC	MONTHLY RATE
• 448 or 512 kbps - NNIT, per Port		
- 1 PVC	17TA2	$192.20
- 2 PVCs	17TB2	201.10
- 3 PVCs	17TC2	210.00
- 4 PVCs	17TD2	218.90
- 5 PVCs	17TE2	227.80
- 6 PVCs through 14[1], per PVC	17TG2	3.50
- 15 PVCs through 24[2], per PVC	17TH2	2.35
- Each additional PVC over 24[3], per PVC	17TJ2	0.45

[1] For each PVC over 5, up to and including 14, add this rate to the monthly rate for 5 PVCs.

[2] For each PVC over 14, up to and including 24, add this rate to the total monthly rate for 14 PVCs.

[3] For each PVC over 24 add this rate to the total monthly rate for 24 PVCs. (M)

Certain material on this page formerly appeared on Page 8-164.
Certain material previously found on this page can now be found on Page 8-146.

8. ADVANCED COMMUNICATIONS NETWORKS

8.3 FRAME RELAY SERVICE (T)(M)

8.3.5 RATES AND CHARGES

C. 24 Months

4. Network-To-Network Information Transfer (NNIT) (Cont'd) (T)

	USOC	MONTHLY RATE	
• 672 or 768 kbps - NNIT, per Port			
- 1 PVC	17TA2	$262.50	(T)
- 2 PVCs	17TB2	274.70	
- 3 PVCs	17TC2	286.90	
- 4 PVCs	17TD2	299.05	
- 5 PVCs	17TE2	311.25	
- 6 PVCs through 14[1], per PVC	17TG2	3.50	
- 15 PVCs through 24[2], per PVC	17TH2	2.35	
- Each additional PVC over 24[3], per PVC	17TJ2	0.45	

[1] For each PVC over 5, up to and including 14, add this rate to the monthly rate for 5 PVCs.

[2] For each PVC over 14, up to and including 24, add this rate to the total monthly rate for 14 PVCs.

[3] For each PVC over 24 add this rate to the total monthly rate for 24 PVCs. (M)

Certain material on this page formerly appeared on Page 8-164.
Certain material previously found on this page can now be found on Page 8-147.

8. ADVANCED COMMUNICATIONS NETWORKS

8.3 FRAME RELAY SERVICE (T)(M)

8.3.5 RATES AND CHARGES

C. 24 Months

4. Network-To-Network Information Transfer (NNIT) (Cont'd) (T)

	USOC	MONTHLY RATE
• 1.544 Mbps - NNIT, per Port		
- 1 PVC	17TA2	$ 196.90
- 2 PVCs	17TB2	231.55
- 3 PVCs	17TC2	266.25
- 4 PVCs	17TD2	300.95
- 5 PVCs	17TE2	335.65
- 6 PVCs through 14[1], per PVC	17TG2	17.80
- 15 PVCs through 24[2], per PVC	17TH2	4.70
- Each additional PVC over 24[3], per PVC	17TJ2	0.45

[1] For each PVC over 5, up to and including 14, add this rate to the monthly rate for 5 PVCs.

[2] For each PVC over 14, up to and including 24, add this rate to the total monthly rate for 14 PVCs.

[3] For each PVC over 24 add this rate to the total monthly rate for 24 PVCs. (M)

Certain material on this page formerly appeared on Page 8-165.
Certain material previously found on this page can now be found on Page 8-148.

8. ADVANCED COMMUNICATIONS NETWORKS

8.3 FRAME RELAY SERVICE (T)(M)

8.3.5 RATES AND CHARGES

C. 24 Months

4. Network-To-Network Information Transfer (NNIT) (Cont'd) (T)

	USOC	MONTHLY RATE	
• 44.736 Mbps - NNIT, per Port			
- 1 PVC	17TU2	$3,562.50	(T)
- 2 PVCs through 50[1], per PVC	17TV2	28.13	
- 51 PVCs through 140[2], per PVC	17TW2	7.50	
- 141 PVCs through 240[3], per PVC	17TY2	3.75	
- 241 PVCs through 500[4], per PVC	17TZ2	1.88	(T)

[1] For each PVC over 1, up to and including 50, add this rate to the monthly rate for 1 PVC. (T)

[2] For each PVC over 50, up to and including 140, add this rate to the total monthly rate for 50 PVCs. (T)

[3] For each PVC over 140, up to and including 240, add this rate to the total monthly rate for 140 PVCs. (T)

[4] For each PVC over 240, up to and including 500, add this rate to the total monthly rate for 240 PVCs. (T) (M)

Certain material on this page formerly appeared on Page 8-165.
Certain material previously found on this page can now be found on Pages 8-149 and 8-150.

8. ADVANCED COMMUNICATIONS NETWORKS

8.3 FRAME RELAY SERVICE (T)(M)
8.3.5 RATES AND CHARGES
C. 24 Months (Cont'd) (T)

	USOC	NONRECURRING CHARGE	MONTHLY RATE	
5. Central Office Connecting Channel				
• Per connection between a Multiplexer and FRS Port or between a Company facility port and an FRS Port				
- For speeds up to 1.544 Mbps	CU5TR	$25.00	$0.62	
- For speeds up to 44.736 Mbps	CU5TR	50.00	9.38	
6. Transport Channels	N/A	[1]	[1]	(T)

[1] See Section 7 for Transport Channel rates and regulations. (M)

Certain material on this page formerly appeared on Page 8-166.
Certain material previously found on this page can now be found on Page 8-151.

8. ADVANCED COMMUNICATIONS NETWORKS

Certain material previously found on this page can now be found on Page 8-152.

8. ADVANCED COMMUNICATIONS NETWORKS

8.3 FRAME RELAY SERVICE (T)(M)
8.3.5 RATES AND CHARGES
C. 24 Months (Cont'd) (T)

	USOC	NONRECURRING CHARGE	MONTHLY RATE	
7. Optional Features and Functions				
• Customer Network Management (CNM)				
- Per workstation registered address initial setup	NM6X2	15.00	$62.81	(T)
- Subsequent CNM order charge, per workstation registered address change or addition of CNM to existing FRS[1]	NR9FM	38.00	–	(T)

[1] When adding CNM to existing FRS, the Subsequent CNM Order Charge applies in addition to the Nonrecurring Charge for the initial setup of CNM. (T) (M)

Certain material on this page formerly appeared on Page 8-166.
Certain material previously found on this page can now be found on Pages 8-153 and 8-154.

8. ADVANCED COMMUNICATIONS NETWORKS

8.3 FRAME RELAY SERVICE (S-y)

8.3.5 RATES AND CHARGES

C. 24 Months

7. Optional Features and Functions (Cont'd)

	USOC	NONRECURRING CHARGE	MONTHLY RATE	
• Priority UNIT PVC[1] (Grandfathered), per PVC				(S-y) (C-y)
- 56 or 64 kbps	PV7X2	$50.00	$4.69	(S-y)
- 112 or 128 kbps	PV7X2	50.00	5.47	
- 224 or 256 kbps	PV7X2	50.00	6.25	
- 336 or 384 kbps	PV7X2	50.00	7.03	
- 448 or 512 kbps	PV7X2	50.00	7.81	
- 672 or 768 kbps	PV7X2	50.00	8.60	
- 1.544 Mbps	PV7X2	50.00	9.38	
- 44.736 Mbps	PV7X2	50.00	9.38	

[1] Priority PVC rates and charges apply in addition to the UNIT PVC rates and charges set forth preceding. (S-y)

(y) Reissued matter filed under Transmittal No. 28, to become effective December 6, 2000.

(Filed under Transmittal 30.)

8. ADVANCED COMMUNICATIONS NETWORKS

8.3 FRAME RELAY SERVICE (S-y)
8.3.5 RATES AND CHARGES (Cont'd) (T-y)

(D-y)

(y) Reissued matter filed under Transmittal No. 28, to become effective December 6, 2000.

8. ADVANCED COMMUNICATIONS NETWORKS

8.3 FRAME RELAY SERVICE (S-y)
8.3.5 RATES AND CHARGES (Cont'd)

D. 36 Months

	USOC	NONRECURRING CHARGE	MONTHLY RATE	
1. Access Link, per Access Link				
• 56 or 64 kbps	L7AX3	$450.00	$ 43.50	
- Vintage[1]			16.17	
- Vintage[2]			17.82	
- Vintage[3]			37.70	(S-y)
• 2-Wire 128 kbps				(T-y)
(Grandfathered)	L7TA3	450.00	38.25	(C-y)
• 1.544 Mbps	L7AX3	450.00	117.01	(S-y)
- Vintage[1]			107.09	
- Vintage[2]			108.84	
2. Stand-Alone Access Link per Access Link				
• 56 or 64 kbps	NNLX3	450.00	43.50	
- Vintage[3]			37.30	
• 1.544 Mbps	NNLX3	450.00	117.01	

[1] Vintage rate in effect 10/12/92 through 1/16/94.
[2] Vintage rate in effect 1/17/94 through 11/13/94.
[3] Vintage rate in effect 11/14/94 through 12/13/96. (S-y)

(y) Reissued matter filed under Transmittal No. 28, to become effective December 6, 2000.

8. ADVANCED COMMUNICATIONS NETWORKS

8.3 FRAME RELAY SERVICE (S-y)

8.3.5 RATES AND CHARGES

D. 36 Months (Cont'd)

3. User-To-Network Information Transfer (UNIT)

	USOC	NONRECURRING CHARGE	
• 56 or 64 kbps			
- First PVC	NRBF1	$ 50.00	
- Each additional PVC	NRBF2	20.00	
- Subsequent PVC(s) order charge, per order[1]	NRBFO	75.00	(S-y)
• 2-Wire 128 kbps (Grandfathered)			(C-y)
- First PVC	NRBF7	300.00	(S-y)
- Each additional PVC	NRBF8	20.00	
- Subsequent PVC(s) order charge, per order[1]	NRBF9	75.00	
• 112 or 128 kbps (4-Wire), 224 or 256 kbps, 336 or 384 kbps, 448 or 512 kbps, and 672 or 768 kbps			
- First PVC	NRBF1	250.00	
- Each additional PVC	NRBF2	20.00	
- Subsequent PVC(s) order charge, per order[1]	NRBFO	75.00	

[1] When appropriate, the "Each additional PVC" nonrecurring charge applies in addition to the "Subsequent PVC order charge". (S-y)

(y) Reissued matter filed under Transmittal No. 28, to become effective December 6, 2000.

8. ADVANCED COMMUNICATIONS NETWORKS

8.3 FRAME RELAY SERVICE (S-y)

8.3.5 RATES AND CHARGES

D. 36 Months

3. User-To-Network Information Transfer (UNIT) (Cont'd)

	USOC	NONRECURRING CHARGE
• 1.544 Mbps		
- First PVC	NRBF1	$ 50.00
- Each additional PVC	NRBF2	20.00
- Subsequent PVC(s) order charge, per order[1]	NRBFO	75.00
• 44.736 Mbps		
- First PVC	NRBF1	250.00
- Each additional PVC	NRBF2	50.00
- Subsequent PVC(s) order charge, per order[1]	NRBFO	75.00 (S-y)
• Fault Tolerant Service (Grandfathered), per UNIT		(C-y) (S-y)
- Initial Service Establishment	NRBF4	500.00
- Subsequent Service Establishment	NRBF5	50.00
- Activation and Restoral	NRBF6	500.00

[1] When appropriate, the "Each additional PVC" nonrecurring charge applies in addition to the "Subsequent PVC order charge". (S-y)

(y) Reissued matter filed under Transmittal No. 28, to become effective December 6, 2000.

8. ADVANCED COMMUNICATIONS NETWORKS

8.3 FRAME RELAY SERVICE (S-y)

8.3.5 RATES AND CHARGES

D. 36 Months

3. User-To-Network Information Transfer (UNIT) (Cont'd)

	USOC	MONTHLY RATE	
• 56 or 64 kbps - UNIT, per Port			
- 0 PVCs, used with Fault Tolerant Service	17T93	$32.38	
- 1 PVC	17TA3	36.33	
- 2 PVCs	17TB3	41.19	
- 3 PVCs	17TC3	44.21	
- 4 PVCs	17TD3	47.23	
- 5 PVCs	17TE3	50.22	
- 6 PVCs through 14[1], per PVC	17TG3	1.15	
Vintage[2]		1.03	
- 15 PVCs through 24[3], per PVC	17TH3	0.25	
Vintage[2]		0.21	
- Each additional PVC over 24[4], per PVC	17TJ3	0.25	
Vintage[2]		0.19	(S-y)
• 2-Wire 128 kbps – UNIT (Grandfathered), per Port			(C-y) (S-y)
- 1 PVC	18TB3	80.75	
- 2 through 8 PVCs[5]	18TC3	7.06	

[1] For each PVC over 5, up to and including 14, add this rate to the monthly rate for 5 PVCs.
[2] Vintage rate in effect 1/17/94 through 11/13/94.
[3] For each PVC over 14, up to and including 24, add this rate to the total monthly rate for 14 PVCs.
[4] For each PVC over 24 add this rate to the total monthly rate for 24 PVCs.
[5] For each PVC over 1, up to and including 8, add this rate to the monthly rate for 1 PVCs. (S-y)

(y) Reissued matter filed under Transmittal No. 28, to become effective December 6, 2000.

8. ADVANCED COMMUNICATIONS NETWORKS

8.3 FRAME RELAY SERVICE (T)(M)
8.3.5 RATES AND CHARGES
D. 36 Months
3. User-To-Network Information Transfer (UNIT) (Cont'd) (T)

	USOC	MONTHLY RATE
• 112 or 128 kbps (4-Wire)- UNIT, per Port		
- 1 PVC	17TA3	$111.00
Vintage[1]		65.95
- 2 PVCs	17TB3	113.80
Vintage[1]		68.83
- 3 PVCs	17TC3	116.55
Vintage[1]		72.07
- 4 PVCs	17TD3	119.35
Vintage[1]		75.31
- 5 PVCs	17TE3	122.10
Vintage[1]		78.54
- 6 PVCs through 14[2], per PVC	17TG3	1.10
- 15 PVCs through 24[3], per PVC	17TH3	0.80
Vintage[1]		0.43
- Each additional PVC over 24[4], per PVC	17TJ3	0.45
Vintage[1]		0.18

[1] Vintage rate in effect 11/14/94 through 12/13/96.
[2] For each PVC over 5, up to and including 14, add this rate to the monthly rate for 5 PVCs.
[3] For each PVC over 14, up to and including 24, add this rate to the total monthly rate for 14 PVCs.
[4] For each PVC over 24 add this rate to the total monthly rate for 24 PVCs. (M)

Certain material on this page formerly appeared on Page 8-172.
Certain material previously found on this page can now be found on Pages 8-165 and 166.

8. ADVANCED COMMUNICATIONS NETWORKS

8.3 FRAME RELAY SERVICE (T)(M)

8.3.5 RATES AND CHARGES

D. 36 Months

3. User-To-Network Information Transfer (UNIT) (Cont'd) (T)

	USOC	MONTHLY RATE
• 224 or 256 kbps - UNIT, per Port		
- 1 PVC	17TA3	$148.00
Vintage[1]		88.54
- 2 PVCs	17TB3	153.55
Vintage[1]		94.75
- 3 PVCs	17TC3	159.10
Vintage[1]		100.95
- 4 PVCs	17TD3	164.65
Vintage[1]		107.14
- 5 PVCs	17TE3	170.20
Vintage[1]		113.33
- 6 PVCs through 14[2], per PVC	17TG3	2.15
- 15 PVCs through 24[3], per PVC	17TH3	1.55
Vintage[1]		0.94
- Each additional PVC over 24[4],per PVC	17TJ3	0.45
Vintage[1]		0.35

[1] Vintage rate in effect 11/14/94 through 12/13/96.
[2] For each PVC over 5, up to and including 14, add this rate to the monthly rate for 5 PVCs.
[3] For each PVC over 14, up to and including 24, add this rate to the total monthly rate for 14 PVCs.
[4] For each PVC over 24 add this rate to the total monthly rate for 24 PVCs. (M)

Certain material on this page formerly appeared on Page 8-173.
Certain material previously found on this page can now be found on Page 8-167.

8. ADVANCED COMMUNICATIONS NETWORKS

8.3 FRAME RELAY SERVICE (T)(M)

8.3.5 RATES AND CHARGES

D. 36 Months

3. User-To-Network Information Transfer (UNIT) (Cont'd) (T)

	USOC	MONTHLY RATE	
• 336 or 384 kbps - UNIT, per Port			
- 1 PVC	17TA3	$185.00	(T)
Vintage[1]		111.49	
- 2 PVCs	17TB3	193.10	
Vintage[1]		120.65	
- 3 PVCs	17TC3	201.20	
Vintage[1]		129.81	
- 4 PVCs	17TD3	209.30	
Vintage[1]		139.77	
- 5 PVCs	17TE3	217.40	
Vintage[1]		149.73	
- 6 PVCs through 14[2], per PVC	17TG3	3.25	
- 15 PVCs through 24[3], per PVC	17TH3	2.30	
Vintage[1]		1.41	
- Each additional PVC over 24[4],per PVC	17TJ3	0.45	

[1] Vintage rate in effect 11/14/94 through 12/13/96.
[2] For each PVC over 5, up to and including 14, add this rate to the monthly rate for 5 PVCs.
[3] For each PVC over 14, up to and including 24, add this rate to the total monthly rate for 14 PVCs.
[4] For each PVC over 24 add this rate to the total monthly rate for 24 PVCs. (M)

Certain material on this page formerly appeared on Page 8-173.
Certain material previously found on this page can now be found on Page 8-168.

8. ADVANCED COMMUNICATIONS NETWORKS

8.3 FRAME RELAY SERVICE (T)(M)

8.3.5 RATES AND CHARGES

D. 36 Months

3. User-To-Network Information Transfer (UNIT) (Cont'd) (T)

	USOC	MONTHLY RATE
• 448 or 512 kbps - UNIT, per Port		
- 1 PVC	17TA3	$217.40
Vintage[1]		134.45
- 2 PVCs	17TB3	226.15
Vintage[1]		146.56
- 3 PVCs	17TC3	234.95
Vintage[1]		158.67
- 4 PVCs	17TD3	243.75
Vintage[1]		173.36
- 5 PVCs	17TE3	252.55
Vintage[1]		188.05
- 6 PVCs through 14[2], per PVC	17TG3	3.45
- 15 PVCs through 24[3], per PVC	17TH3	2.30
Vintage[1]		1.88
- Each additional PVC over 24[4], per PVC	17TJ3	0.45

[1] Vintage rate in effect 11/14/94 through 12/13/96.
[2] For each PVC over 5, up to and including 14, add this rate to the monthly rate for 5 PVCs.
[3] For each PVC over 14, up to and including 24, add this rate to the total monthly rate for 14 PVCs.
[4] For each PVC over 24 add this rate to the total monthly rate for 24 PVCs. (M)

Certain material on this page formerly appeared on Page 8-174.
Certain material previously found on this page can now be found on Page 8-169.

8. ADVANCED COMMUNICATIONS NETWORKS

8.3 FRAME RELAY SERVICE (T)(M)

8.3.5 RATES AND CHARGES

D. 36 Months

3. User-To-Network Information Transfer (UNIT) (Cont'd) (T)

	USOC	MONTHLY RATE	
• 672 or 768 kbps - UNIT, per Port			
- 1 PVC	17TA3	$286.75	(T)
Vintage[1]		181.03	
- 2 PVCs	17TB3	299.70	
Vintage[1]		199.72	
- 3 PVCs	17TC3	312.65	
Vintage[1]		218.39	
- 4 PVCs	17TD3	325.60	
Vintage[1]		239.35	
- 5 PVCs	17TE3	338.55	
Vintage[1]		261.35	
- 6 PVCs through 14[2], per PVC	17TG3	3.70	
- 15 PVCs through 24[3], per PVC	17TH3	2.55	
- Each additional PVC over 24[4], per PVC	17TJ3	0.80	

[1] Vintage rate in effect 11/14/94 through 12/13/96.
[2] For each PVC over 5, up to and including 14, add this rate to the monthly rate for 5 PVCs.
[3] For each PVC over 14, up to and including 24, add this rate to the total monthly rate for 14 PVCs.
[4] For each PVC over 24 add this rate to the total monthly rate for 24 PVCs. (M)

Certain material on this page formerly appeared on Page 8-174.
Certain material previously found on this page can now be found on Pages 8-170 and 8-171.

8. ADVANCED COMMUNICATIONS NETWORKS

8.3 FRAME RELAY SERVICE (T)(M)
8.3.5 RATES AND CHARGES
D. 36 Months
3. User-To-Network Information Transfer (UNIT) (Cont'd) (T)

	USOC	MONTHLY RATE
• 1.544 Mbps - UNIT, per Port		
- 0 PVCs, used with Fault Tolerant Service	17T93	$198.88
- 1 PVC	17TA3	222.00
Vintage[1]		127.21
- 2 PVCs	17TB3	256.25
Vintage[1]		178.72
- 3 PVCs	17TC3	290.45
Vintage[1]		230.24
- 4 PVCs	17TD3	324.70
Vintage[1]		281.03
- 5 PVCs	17TE3	358.90
Vintage[1]		331.83
- 6 PVCs through 14[2], per PVC	17TG3	17.60
Vintage[3]		17.08
- 15 PVCs through 24[4], per PVC	17TH3	4.65
- Each additional PVC over 24[5],per PVC	17TJ3	0.45
Vintage[1]		0.23

[1] Vintage rate in effect 11/14/94 through 12/13/96.
[2] For each PVC over 5, up to and including 14, add this rate to the monthly rate for 5 PVCs.
[3] Vintage rate in effect 1/17/94 through 11/13/94.
[4] For each PVC over 14, up to and including 24, add this rate to the total monthly rate for 14 PVCs.
[5] For each PVC over 24 add this rate to the total monthly rate for 24 PVCs. (M)

Certain material on this page formerly appeared on Page 8-175.
Certain material previously found on this page can now be found on Pages 8-172 and 8-173.

8. ADVANCED COMMUNICATIONS NETWORKS

8.3 FRAME RELAY SERVICE (T)(M)

8.3.5 RATES AND CHARGES

D. 36 Months

3. User-To-Network Information Transfer (UNIT) (Cont'd) (T)

	USOC	MONTHLY RATE
• 44.736 Mbps - UNIT, per Port		
- 0 PVCs, used with Fault Tolerant Service	17T93	$3,237.50
- 1 PVC	17TU3	3,515.00
- 2 PVCs through 50[1], per PVC	17TV3	27.75
- 51 PVCs through 140[2], per PVC	17TW3	7.40
- 141 PVCs through 240[3], per PVC	17TY3	3.70
- 241 PVCs through 500[4], per PVC	17TZ3	1.85

[1] For each PVC over 1, up to and including 50, add this rate to the monthly rate for 1 PVC.
[2] For each PVC over 50, up to and including 140, add this rate to the total monthly rate for 50 PVCs.
[3] For each PVC over 140, up to and including 240, add this rate to the total monthly rate for 140 PVCs.
[4] For each PVC over 240, up to and including 500, add this rate to the total monthly rate for 240 PVCs. (M)

Certain material on this page formerly appeared on Page 8-176.
Certain material previously found on this page can now be found on Page 8-174.

8. ADVANCED COMMUNICATIONS NETWORKS

8.3 FRAME RELAY SERVICE (T)(M)
8.3.5 RATES AND CHARGES (T)

D. 36 Months (Cont'd)

4. Network-To-Network Information Transfer (NNIT)

	USOC	NONRECURRING CHARGE
• 56 or 64 kbps		
- First PVC	NRBF1	$ 50.00
- Each additional PVC	NRBF2	20.00
- Subsequent PVC(s) order charge, per order[1]	NRBFO	75.00
• 112 or 128 kbps, 224 or 256 kbps, 336 or 384 kbps, 448 or 512 kbps, and 672 or 768 kbps		
- First PVC	NRBF1	250.00
- Each additional PVC	NRBF2	20.00
- Subsequent PVC(s) order charge, per order[1]	NRBFO	75.00
• 1.544 Mbps		
- First PVC	NRBF1	50.00
- Each additional PVC	NRBF2	20.00
- Subsequent PVC(s) order charge, per order[1]	NRBFO	75.00

[1] When appropriate, the "Each additional PVC" nonrecurring charge applies in addition to the "Subsequent PVC order charge". (M)

Certain material on this page formerly appeared on Page 8-177.
Certain material previously found on this page can now be found on Page 8-175.

8. ADVANCED COMMUNICATIONS NETWORKS

8.3 FRAME RELAY SERVICE (T)(M)

8.3.5 RATES AND CHARGES

D. 36 Months

4. Network-To-Network Information Transfer (NNIT) (Cont'd) (T)

	USOC	NONRECURRING CHARGE
• 44.736 Mbps		
- First PVC	NRBF1	$250.00
- Each additional PVC	NRBF2	50.00
- Subsequent PVC(s) order charge, per order[1]	NRBFO	75.00

[1] When appropriate, the "Each additional PVC" nonrecurring charge applies in addition to the "Subsequent PVC order charge". (M)

Certain material on this page formerly appeared on Page 8-177.1.
Certain material previously found on this page can now be found on Page 8-176.

8. ADVANCED COMMUNICATIONS NETWORKS

Certain material previously found on this page can now be found on Page 8-177.

8. ADVANCED COMMUNICATIONS NETWORKS

8.3 FRAME RELAY SERVICE (T)(M)

8.3.5 RATES AND CHARGES

D. 36 Months

4. Network-To-Network Information Transfer (NNIT) (Cont'd) (T)

	USOC	MONTHLY RATE
• 56 or 64 kbps - NNIT, per Port		
- 1 PVC	17TA3	$35.15
Vintage[1]		35.14
- 2 PVCs	17TB3	39.15
Vintage[1]		36.84
- 3 PVCs	17TC3	43.20
Vintage[1]		38.55
- 4 PVCs	17TD3	47.20
Vintage[1]		40.27
- 5 PVCs	17TE3	51.25
Vintage[1]		41.97
- 6 PVCs through 14[2], per PVC	17TG3	0.45
- 15 PVCs through 24[3], per PVC	17TH3	0.30
Vintage[1]		0.15
- Each additional PVC over 24[4],per PVC	17TJ3	0.25
Vintage[1]		0.06

[1] Vintage rate in effect 11/14/94 through 12/13/96.
[2] For each PVC over 5, up to and including 14, add this rate to the monthly rate for 5 PVCs.
[3] For each PVC over 14, up to and including 24, add this rate to the total monthly rate for 14 PVCs.
[4] For each PVC over 24 add this rate to the total monthly rate for 24 PVCs. (M)

Certain material previously found on this page can now be found on Page 8-179.

8. ADVANCED COMMUNICATIONS NETWORKS

8.3 FRAME RELAY SERVICE (T)(M)

8.3.5 RATES AND CHARGES

D. 36 Months

4. Network-To-Network Information Transfer (NNIT) (Cont'd) (T)

	USOC	MONTHLY RATE	
• 112 or 128 kbps - NNIT, per Port			
- 1 PVC	17TA3	$78.65	(T)
Vintage[1]		46.01	
- 2 PVCs	17TB3	81.40	
Vintage[1]		49.25	
- 3 PVCs	17TC3	84.20	
Vintage[1]		52.49	
- 4 PVCs	17TD3	86.95	
Vintage[1]		55.73	
- 5 PVCs	17TE3	89.75	
Vintage[1]		58.96	
- 6 PVCs through 14[2], per PVC	17TG3	1.10	
- 15 PVCs through 24[3], per PVC	17TH3	0.80	
Vintage[1]		0.31	
- Each additional PVC over 24[4],per PVC	17TJ3	0.45	
Vintage[1]		0.11	

[1] Vintage rate in effect 11/14/94 through 12/13/96.
[2] For each PVC over 5, up to and including 14, add this rate to the monthly rate for 5 PVCs.
[3] For each PVC over 14, up to and including 24, add this rate to the total monthly rate for 14 PVCs.
[4] For each PVC over 24 add this rate to the total monthly rate for 24 PVCs. (M)

Certain material on this page formerly appeared on Page 8-178.
Certain material previously found on this page can now be found on Page 8-180 and 8-181.

8. ADVANCED COMMUNICATIONS NETWORKS

8.3 FRAME RELAY SERVICE (T)(M)

8.3.5 RATES AND CHARGES

D. 36 Months

4. Network-To-Network Information Transfer (NNIT) (Cont'd) (T)

	USOC	MONTHLY RATE
• 224 or 256 kbps - NNIT, per Port		
- 1 PVC	17TA3	$115.65
Vintage[1]		68.97
- 2 PVCs	17TB3	121.20
Vintage[1]		75.18
- 3 PVCs	17TC3	126.75
Vintage[1]		81.37
- 4 PVCs	17TD3	132.30
Vintage[1]		87.57
- 5 PVCs	17TE3	137.85
Vintage[1]		93.75
- 6 PVCs through 14[2], per PVC	17TG3	2.15
- 15 PVCs through 24[3], per PVC	17TH3	1.55
Vintage[1]		0.56
- Each additional PVC over 24[4], per PVC	17TJ3	0.45
Vintage[1]		0.21

[1] Vintage rate in effect 11/14/94 through 12/13/96.
[2] For each PVC over 5, up to and including 14, add this rate to the monthly rate for 5 PVCs.
[3] For each PVC over 14, up to and including 24, add this rate to the total monthly rate for 14 PVCs.
[4] For each PVC over 24 add this rate to the total monthly rate for 24 PVCs. (M)

Certain material on this page formerly appeared on Page 8-179.

Certain material previously found on this page can now be found on Pages 8-182 and 8-183.

8. ADVANCED COMMUNICATIONS NETWORKS

8.3 FRAME RELAY SERVICE (T)(M)

8.3.5 RATES AND CHARGES

D. 36 Months

4. Network-To-Network Information Transfer (NNIT) (Cont'd) (T)

	USOC	MONTHLY RATE	
• 336 or 384 kbps - NNIT, per Port			
- 1 PVC	17TA3	$157.25	(T)
Vintage[1]		91.92	
- 2 PVCs	17TB3	165.35	
Vintage[1]		101.07	
- 3 PVCs	17TC3	173.45	
Vintage[1]		110.21	
- 4 PVCs	17TD3	181.55	
Vintage[1]		119.37	
- 5 PVCs	17TE3	189.65	
Vintage[1]		128.51	
- 6 PVCs through 14[2], per PVC	17TG3	3.25	
- 15 PVCs through 24[3], per PVC	17TH3	2.30	
Vintage[1]		0.85	
- Each additional PVC over 24[4], per PVC	17TJ3	0.45	
Vintage[1]		0.31	

[1] Vintage rate in effect 11/14/94 through 12/13/96.
[2] For each PVC over 5, up to and including 14, add this rate to the monthly rate for 5 PVCs.
[3] For each PVC over 14, up to and including 24, add this rate to the total monthly rate for 14 PVCs.
[4] For each PVC over 24 add this rate to the total monthly rate for 24 PVCs. (M)

Certain material on this page formerly appeared on Page 8-179.
Certain material previously found on this page can now be found on Page 8-184.

8. ADVANCED COMMUNICATIONS NETWORKS

Certain material previously found on this page can now be found on Page 8-185.

8. ADVANCED COMMUNICATIONS NETWORKS

8.3 FRAME RELAY SERVICE (T)(M)

8.3.5 RATES AND CHARGES

D. 36 Months

4. Network-To-Network Information Transfer (NNIT) (Cont'd) (T)

	USOC	MONTHLY RATE
• 448 or 512 kbps - NNIT, per Port		
- 1 PVC	17TA3	$189.65
Vintage[1]		114.87
- 2 PVCs	17TB3	198.40
Vintage[1]		126.98
- 3 PVCs	17TC3	207.20
Vintage[1]		139.09
- 4 PVCs	17TD3	216.00
Vintage[1]		151.19
- 5 PVCs	17TE3	224.80
Vintage[1]		163.30
- 6 PVCs through 14[2], per PVC	17TG3	3.45
- 15 PVCs through 24[3], per PVC	17TH3	2.30
Vintage[1]		1.13
- Each additional PVC over 24[4], per PVC	17TJ3	0.45
Vintage[1]		0.43

[1] Vintage rate in effect 11/14/94 through 12/13/96.
[2] For each PVC over 5, up to and including 14, add this rate to the monthly rate for 5 PVCs.
[3] For each PVC over 14, up to and including 24, add this rate to the total monthly rate for 14 PVCs.
[4] For each PVC over 24 add this rate to the total monthly rate for 24 PVCs. (M)

Certain material on this page formerly appeared on Page 8-180.
Certain material previously found on this page can now be found on Page 8-186.

8. ADVANCED COMMUNICATIONS NETWORKS

8.3 FRAME RELAY SERVICE (T)(M)

8.3.5 RATES AND CHARGES

D. 36 Months

4. Network-To-Network Information Transfer (NNIT) (Cont'd) (T)

	USOC	MONTHLY RATE	
• 672 or 768 kbps - NNIT, per Port			
- 1 PVC	17TA3	$259.00	(T)
Vintage[1]		161.45	
- 2 PVCs	17TB3	271.05	
Vintage[1]		180.13	
- 3 PVCs	17TC3	283.05	
Vintage[1]		198.82	
- 4 PVCs	17TD3	295.10	
Vintage[1]		217.50	
- 5 PVCs	17TE3	307.10	
Vintage[1]		236.18	
- 6 PVCs through 14[2], per PVC	17TG3	3.45	
- 15 PVCs through 24[3], per PVC	17TH3	2.30	
- Each additional PVC over 24[4], per PVC	17TJ3	0.45	

[1] Vintage rate in effect 11/14/94 through 12/13/96.
[2] For each PVC over 5, up to and including 14, add this rate to the monthly rate for 5 PVCs.
[3] For each PVC over 14, up to and including 24, add this rate to the total monthly rate for 14 PVCs.
[4] For each PVC over 24 add this rate to the total monthly rate for 24 PVCs. (M)

Certain material on this page formerly appeared on Page 8-180.
Certain material previously found on this page can now be found on Page 8-187.

8. ADVANCED COMMUNICATIONS NETWORKS

8.3 FRAME RELAY SERVICE (T)(M)
8.3.5 RATES AND CHARGES
D. 36 Months
4. Network-To-Network Information Transfer (NNIT) (Cont'd) (T)

	USOC	MONTHLY RATE
• 1.544 Mbps - NNIT, per Port		
- 1 PVC	17TA3	$194.25
Vintage[1]		107.62
- 2 PVCs	17TB3	228.50
Vintage[1]		158.42
- 3 PVCs	17TC3	262.70
Vintage[1]		209.23
- 4 PVCs	17TD3	296.95
Vintage[1]		260.01
- 5 PVCs	17TE3	331.15
Vintage[1]		310.81
- 6 PVCs through 14[2], per PVC	17TG3	17.60
- 15 PVCs through 24[3], per PVC	17TH3	4.65
Vintage[1]		4.17
- Each additional PVC over 24[4], per PVC	17TJ3	0.45
Vintage[1]		0.14

[1] Vintage rate in effect 11/14/94 through 12/13/96.
[2] For each PVC over 5, up to and including 14, add this rate to the monthly rate for 5 PVCs.
[3] For each PVC over 14, up to and including 24, add this rate to the total monthly rate for 14 PVCs.
[4] For each PVC over 24 add this rate to the total monthly rate for 24 PVCs. (M)

Certain material on this page formerly appeared on Page 8-181.
Certain material previously found on this page can now be found on Page 188.

8. ADVANCED COMMUNICATIONS NETWORKS

8.3 FRAME RELAY SERVICE (T)(M)

8.3.5 RATES AND CHARGES

D. 36 Months

4. Network-To-Network Information Transfer (NNIT) (Cont'd) (T)

	USOC	MONTHLY RATE
• 44.736 Mbps - NNIT, per Port		
- 1 PVC	17TU3	$3,515.00
- 2 PVCs through 50[1], per PVC	17TV3	27.75
- 51 PVCs through 140[2], per PVC	17TW3	7.40
- 141 PVCs through 240[3], per PVC	17TY3	3.70
- 241 PVCs through 500[4], per PVC	17TZ3	1.85

[1] For each PVC over 1, up to and including 50, add this rate to the monthly rate for 1 PVC.

[2] For each PVC over 50, up to and including 140, add this rate to the total monthly rate for 50 PVCs.

[3] For each PVC over 140, up to and including 240, add this rate to the total monthly rate for 140 PVCs.

[4] For each PVC over 240, up to and including 500, add this rate to the total monthly rate for 240 PVCs. (M)

Certain material on this page formerly appeared on Page 8-181.1.
Certain material previously found on this page can now be found on Pages 8-189 and 8-190.

8. ADVANCED COMMUNICATIONS NETWORKS

8.3 FRAME RELAY SERVICE (T)(M)
8.3.5 RATES AND CHARGES (T)
D. 36 Months (Cont'd)

	USOC	NONRECURRING CHARGE	MONTHLY RATE	
5. Central Office Connecting Channel				
• Per connection between a Multiplexer and FRS Port or between a Company facility port and an FRS Port				
- For speeds up to 1.544 Mbps	CU5UR	$25.00	$ 0.60	
- For speeds up to 44.736 Mbps	CU5UR	50.00	9.25	
6. Transport Channels	N/A	[1]	[1]	(T)
7. Optional Features and Functions				
• Customer Network Management (CNM)				
- Per workstation registered address initial setup	NM6X3	15.00	61.98	
- Subsequent CNM order charge, per workstation registered address change or addition of CNM to existing FRS[2]	NR9FM	38.00	–	

[1] See Section 7 for Transport Channel rates and regulations.

[2] When adding CNM to existing FRS, the Subsequent CNM Order Charge applies in addition to the Nonrecurring Charge for the initial setup of CNM. (M)

Certain material on this page formerly appeared on Page 8-182.
Certain material previously found on this page can now be found on Pages 8-190 and 8-191.

8. ADVANCED COMMUNICATIONS NETWORKS

8.3 FRAME RELAY SERVICE (S-y)

8.3.5 RATES AND CHARGES

D. 36 Months

7. Optional Features and Functions (Cont'd)

	USOC	NONRECURRING CHARGE	MONTHLY RATE	
• Priority UNIT PVC[1] (Grandfathered), per PVC				(S-y) (C-y)
- 56 or 64 kbps	PV7X3	$50.00	$4.63	(S-y)
- 112 or 128 kbps	PV7X3	50.00	5.39	
- 224 or 256 kbps	PV7X3	50.00	6.17	
- 336 or 384 kbps	PV7X3	50.00	6.94	
- 448 or 512 kbps	PV7X3	50.00	7.71	
- 672 or 768 kbps	PV7X3	50.00	8.48	
- 1.544 Mbps	PV7X3	50.00	9.25	
- 44.736 Mbps	PV7X3	50.00	9.25	

[1] Priority PVC rates and charges apply in addition to the UNIT PVC rates and charges set forth preceding. (S-y)

(y) Reissued matter filed under Transmittal No. 28, to become effective December 6, 2000.

8. ADVANCED COMMUNICATIONS NETWORKS

8.3 FRAME RELAY SERVICE (S-y)
8.3.5 RATES AND CHARGES (Cont'd) (T-y)

(D-y)

(y) Reissued matter filed under Transmittal No. 28, to become effective December 6, 2000.

8. ADVANCED COMMUNICATIONS NETWORKS

8.3 FRAME RELAY SERVICE (T)(M)
8.3.5 RATES AND CHARGES (Cont'd) (T)

E. 48 Months

	USOC	NONRECURRING CHARGE	MONTHLY RATE
1. Access Link, per Access Link			
• 56 or 64 kbps	L7AX4	$450.00	$ 42.90
- Vintage[1]			16.17
- Vintage[2]			17.82
- Vintage[3]			37.19
• 1.544 Mbps	L7AX4	450.00	115.43
- Vintage[1]			107.09
- Vintage[2]			108.84
2. Stand-Alone Access Link, per Access Link			
• 56 or 64 kbps	NNLX4	450.00	42.90
- Vintage[3]			37.19
• 1.544 Mbps	NNLX4	450.00	115.43

[1] Vintage rate in effect 10/12/92 through 1/16/94.
[2] Vintage rate in effect 1/17/94 through 11/13/94.
[3] Vintage rate in effect 11/14/94 through 12/13/96. (M)

Certain material on this page formerly appeared on Page 8-185.
Certain material previously found on this page can now be found on Pages 8-196 and 8-197.

8. ADVANCED COMMUNICATIONS NETWORKS

8.3 FRAME RELAY SERVICE (T)(M)
8.3.5 RATES AND CHARGES
E. 48 Months (Cont'd) (T)

3. User-To-Network Information Transfer (UNIT)

	USOC	NONRECURRING CHARGE	
• 56 or 64 kbps			
- First PVC	NRBF1	$50.00	
- Each additional PVC	NRBF2	20.00	
- Subsequent PVC(s) order charge, per order[1]	NRBFO	75.00	(T)
• 112 or 128 kbps, 224 or 256 kbps, 336 or 384 kbps, 448 or 512 kbps, and 672 or 768 kbps			
- First PVC	NRBF1	250.00	
- Each additional PVC	NRBF2	20.00	
- Subsequent PVC(s) order charge, per order[1]	NRBFO	75.00	

[1] When appropriate, the "Each additional PVC" nonrecurring charge applies in addition to the "Subsequent PVC order charge". (M)

Certain material on this page formerly appeared on Pages 8-185 and 8-186.
Certain material previously found on this page can now be found on Pages 8-198 and 8-199.

8. ADVANCED COMMUNICATIONS NETWORKS

8.3 FRAME RELAY SERVICE (S-y)

8.3.5 RATES AND CHARGES

E. 48 Months

3. User-To-Network Information Transfer (UNIT) (Cont'd)

	USOC	NONRECURRING CHARGE	
• 1.544 Mbps			
- First PVC	NRBF1	$ 50.00	
- Each additional PVC	NRBF2	20.00	
- Subsequent PVC(s) order charge, per order[1]	NRBFO	75.00	
• 44.736 Mbps			
- First PVC	NRBF1	250.00	
- Each additional PVC	NRBF2	50.00	
- Subsequent PVC(s) order charge, per order[1]	NRBFO	75.00	(S-y)
• Fault Tolerant Service (Grandfathered), per UNIT			(C-y) (S-y)
- Initial Service Establishment	NRBF4	500.00	
- Subsequent Service Establishment	NRBF5	50.00	
- Activation and Restoral	NRBF6	500.00	

[1] When appropriate, the "Each additional PVC" nonrecurring charge applies in addition to the "Subsequent PVC order charge". (S-y)

(y) Reissued matter filed under Transmittal No. 28, to become effective December 6, 2000.

8. ADVANCED COMMUNICATIONS NETWORKS

Certain material previously found on this page can now be found on Page 8-201.

8. ADVANCED COMMUNICATIONS NETWORKS

8.3 FRAME RELAY SERVICE (T)(M)

8.3.5 RATES AND CHARGES

E. 48 Months

3. User-To-Network Information Transfer (UNIT) (Cont'd) (T)

	USOC	MONTHLY RATE
• 56 or 64 kbps - UNIT, per Port		
- 0 PVCs, used with Fault Tolerant Service	17T94	$ 31.94
- 1 PVC	17TA4	35.84
- 2 PVCs	17TB4	40.63
- 3 PVCs	17TC4	43.61
- 4 PVCs	17TD4	46.59
- 5 PVCs	17TE4	49.54
- 6 PVCs through 14[1], per PVC	17TG4	1.13
Vintage[2]		1.03
- 15 PVCs through 24[3], per PVC	17TH4	0.25
Vintage[2]		0.21
- Each additional PVC over 24[4], per PVC	17TJ4	0.25
Vintage[2]		0.09
Vintage[5]		0.10

[1] For each PVC over 5, up to and including 14, add this rate to the monthly rate for 5 PVCs.
[2] Vintage rate in effect 1/17/94 through 11/13/94.
[3] For each PVC over 14, up to and including 24, add this rate to the total monthly rate for 14 PVCs.
[4] For each PVC over 24 add this rate to the total monthly rate for 24 PVCs.
[5] Vintage rate in effect 11/14/94 through 12/13/96. (M)

Certain material on this page formerly appeared on Page 8-187.
Certain material previously found on this page can now be found on Pages 8-202 and 8-203.

8. ADVANCED COMMUNICATIONS NETWORKS

8.3 FRAME RELAY SERVICE (T)(M)
8.3.5 RATES AND CHARGES
E. 48 Months
3. User-To-Network Information Transfer (UNIT) (Cont'd) (T)

	USOC	MONTHLY RATE	
• 112 or 128 kbps - UNIT, per Port			
- 1 PVC	17TA4	$109.50	(T)
Vintage[1]		64.71	(T)
- 2 PVCs	17TB4	112.25	
Vintage[1]		67.90	(T)
- 3 PVCs	17TC4	115.00	
Vintage[1]		71.09	(T)
- 4 PVCs	17TD4	117.70	
Vintage[1]		74.30	(T)
- 5 PVCs	17TE4	120.45	
Vintage[1]		77.48	(T)
- 6 PVCs through 14[2], per PVC	17TG4	1.10	(T)
- 15 PVCs through 24[3], per PVC	17TH4	0.80	
Vintage[1]		0.42	(T)
- Each additional PVC over 24[4], per PVC	17TJ4	0.45	
Vintage[1]		0.17	(T)

[1] Vintage rate in effect 11/14/94 through 12/13/96. (T)
[2] For each PVC over 5, up to and including 14, add this rate to the monthly rate for 5 PVCs. (T)
[3] For each PVC over 14, up to and including 24, add this rate to the total monthly rate for 14 PVCs.
[4] For each PVC over 24 add this rate to the total monthly rate for 24 PVCs. (M)

Certain material on this page formerly appeared on Page 8-187.
Certain material previously found on this page can now be found on Pages 8-204 and 8-205.

8. ADVANCED COMMUNICATIONS NETWORKS

8.3 FRAME RELAY SERVICE (T)(M)

8.3.5 RATES AND CHARGES

E. 48 Months

3. User-To-Network Information Transfer (UNIT) (Cont'd) (T)

	USOC	MONTHLY RATE
• 224 or 256 kbps - UNIT, per Port		
- 1 PVC	17TA4	$146.00
- 2 PVCs	17TB4	151.50
- 3 PVCs	17TC4	156.95
- 4 PVCs	17TD4	162.45
- 5 PVCs	17TE4	167.90
- 6 PVCs through 14[1], per PVC	17TG4	2.15
- 15 PVCs through 24[2], per PVC	17TH4	1.50
- Each additional PVC over 24[3], per PVC	17TJ4	0.45

[1] For each PVC over 5, up to and including 14, add this rate to the monthly rate for 5 PVCs.

[2] For each PVC over 14, up to and including 24, add this rate to the total monthly rate for 14 PVCs.

[3] For each PVC over 24 add this rate to the total monthly rate for 24 PVCs. (M)

Certain material on this page formerly appeared on Page 8-188.
Certain material previously found on this page can now be found on Pages 8-206 and 8-207.

8. ADVANCED COMMUNICATIONS NETWORKS

8.3 FRAME RELAY SERVICE (T)(M)

8.3.5 RATES AND CHARGES

E. 48 Months

3. User-To-Network Information Transfer (UNIT) (Cont'd) (T)

	USOC	MONTHLY RATE	
• 336 or 384 kbps - UNIT, per Port			
- 1 PVC	17TA4	$182.50	(T)
- 2 PVCs	17TB4	190.50	
- 3 PVCs	17TC4	198.45	
- 4 PVCs	17TD4	206.45	
- 5 PVCs	17TE4	214.45	
- 6 PVCs through 14[1], per PVC	17TG4	3.20	
- 15 PVCs through 24[2], per PVC	17TH4	2.30	
- Each additional PVC over 24[3], per PVC	17TJ4	0.45	

[1] For each PVC over 5, up to and including 14, add this rate to the monthly rate for 5 PVCs.

[2] For each PVC over 14, up to and including 24, add this rate to the total monthly rate for 14 PVCs.

[3] For each PVC over 24 add this rate to the total monthly rate for 24 PVCs. (M)

Certain material on this page formerly appeared on Page 8-188.
Certain material previously found on this page can now be found on Page 8-208.

8. ADVANCED COMMUNICATIONS NETWORKS

Certain material previously found on this page can now be found on Page 8-209.

8. ADVANCED COMMUNICATIONS NETWORKS

8.3 FRAME RELAY SERVICE (T)(M)

8.3.5 RATES AND CHARGES

E. 48 Months

3. User-To-Network Information Transfer (UNIT) (Cont'd) (T)

	USOC	MONTHLY RATE
• 448 or 512 kbps - UNIT, per Port		
- 1 PVC	17TA4	$214.45
Vintage[1]		132.63
- 2 PVCs	17TB4	223.10
Vintage[1]		144.58
- 3 PVCs	17TC4	231.80
Vintage[1]		156.52
- 4 PVCs	17TD4	240.45
Vintage[1]		171.02
- 5 PVCs	17TE4	249.10
Vintage[1]		185.51
- 6 PVCs through 14[2], per PVC	17TG4	3.40
- 15 PVCs through 24[3], per PVC	17TH4	2.30
Vintage[1]		1.85
- Each additional PVC over 24[4], per PVC	17TJ4	0.45

[1] Vintage rate in effect 11/14/94 through 12/13/96.
[2] For each PVC over 5, up to and including 14, add this rate to the monthly rate for 5 PVCs.
[3] For each PVC over 14, up to and including 24, add this rate to the total monthly rate for 14 PVCs.
[4] For each PVC over 24 add this rate to the total monthly rate for 24 PVCs. (M)

Certain material on this page formerly appeared on Page 8-189.
Certain material previously found on this page can now be found on Page 8-210.

8. ADVANCED COMMUNICATIONS NETWORKS

8.3 FRAME RELAY SERVICE (T)(M)

8.3.5 RATES AND CHARGES

E. 48 Months

3. User-To-Network Information Transfer (UNIT) (Cont'd) (T)

	USOC	MONTHLY RATE	
• 672 or 768 kbps - UNIT, per Port			
- 1 PVC	17TA4	$282.90	(T)
Vintage[1]		178.59	
- 2 PVCs	17TB4	295.65	
Vintage[1]		197.02	
- 3 PVCs	17TC4	308.45	
Vintage[1]		215.44	
- 4 PVCs	17TD4	321.20	
Vintage[1]		236.62	
- 5 PVCs	17TE4	334.00	
Vintage[1]		257.82	
- 6 PVCs through 14[2], per PVC	17TG4	3.65	
- 15 PVCs through 24[3], per PVC	17TH4	2.50	
- Each additional PVC over 24[4], per PVC	17TJ4	0.80	

[1] Vintage rate in effect 11/14/94 through 12/13/96.
[2] For each PVC over 5, up to and including 14, add this rate to the monthly rate for 5 PVCs.
[3] For each PVC over 14, up to and including 24, add this rate to the total monthly rate for 14 PVCs.
[4] For each PVC over 24 add this rate to the total monthly rate for 24 PVCs. (M)

Certain material on this page formerly appeared on Page 8-189.
Certain material previously found on this page can now be found on Page 8-211.

8. ADVANCED COMMUNICATIONS NETWORKS

8.3 FRAME RELAY SERVICE (T)(M)

8.3.5 RATES AND CHARGES

E. 48 Months

3. User-To-Network Information Transfer (UNIT) (Cont'd) (T)

	USOC	MONTHLY RATE
• 1.544 Mbps - UNIT, per Port		
- 0 PVCs, used with Fault Tolerant Service	17T94	$ 196.19
- 1 PVC	17TA4	219.00
Vintage[1]		125.49
- 2 PVCs	17TB4	252.75
Vintage[1]		176.30
- 3 PVCs	17TC4	286.55
Vintage[1]		227.13
- 4 PVCs	17TD4	320.30
Vintage[1]		277.24
- 5 PVCs	17TE4	354.05
- Vintage[1]		327.34
6 PVCs through 14[2], per PVC	17TG4	17.35
- 15 PVCs through 24[3], per PVC	17TH4	4.55
- Each additional PVC over 24[4], per PVC	17TJ4	0.45
- Vintage[1]		0.23

[1] Vintage rate in effect 11/14/94 through 12/13/96.
[2] For each PVC over 5, up to and including 14, add this rate to the monthly rate for 5 PVCs.
[3] For each PVC over 14, up to and including 24, add this rate to the total monthly rate for 14 PVCs.
[4] For each PVC over 24 add this rate to the total monthly rate for 24 PVCs. (M)

Certain material on this page formerly appeared on Page 8-190.
Certain material previously found on this page can now be found on Page 8-212.

8. ADVANCED COMMUNICATIONS NETWORKS

8.3 FRAME RELAY SERVICE (T)(M)

8.3.5 RATES AND CHARGES

E. 48 Months

3. User-To-Network Information Transfer (UNIT) (Cont'd) (T)

	USOC	MONTHLY RATE	
• 44.736 Mbps - UNIT, per Port			
- 0 PVCs, used with Fault Tolerant Service	17T94	$3,193.75	(T)
- 1 PVC	17TU4	3,467.50	
- 2 PVCs through 50[1], per PVC	17TV4	27.38	(T)
- 51 PVCs through 140[2], per PVC	17TW4	7.30	
- 141 PVCs through 240[3], per PVC	17TY4	3.65	
- 241 PVCs through 500[4], per PVC	17TZ4	1.83	(T)

[1] For each PVC over 1, up to and including 50, add this rate to the monthly rate for 1 PVC. (T)

[2] For each PVC over 50, up to and including 140, add this rate to the total monthly rate for 50 PVCs. (T)

[3] For each PVC over 140, up to and including 240, add this rate to the total monthly rate for 140 PVCs. (T)

[4] For each PVC over 240, up to and including 500, add this rate to the total monthly rate for 240 PVCs. (T) (M)

Certain material on this page formerly appeared on Page 8-190.
Certain material previously found on this page can now be found on Pages 8-213 and 8-214.

8. ADVANCED COMMUNICATIONS NETWORKS

8.3 FRAME RELAY SERVICE (T)(M)
8.3.5 RATES AND CHARGES (T)

E. 48 Months (Cont'd)

4. Network-To-Network Information Transfer (NNIT)

	USOC	NONRECURRING CHARGE
• 56 or 64 kbps		
- First PVC	NRBF1	$ 50.00
- Each additional PVC	NRBF2	20.00
- Subsequent PVC(s) order charge, per order[1]	NRBFO	75.00
• 112 or 128 kbps, 224 or 256 kbps, 336 or 384 kbps, 448 or 512 kbps, and 672 or 768 kbps		
- First PVC	NRBF1	250.00
- Each additional PVC	NRBF2	20.00
- Subsequent PVC(s) order charge, per order[1]	NRBFO	75.00
• 1.544 Mbps		
- First PVC	NRBF1	50.00
- Each additional PVC	NRBF2	20.00
- Subsequent PVC(s) order charge, per order[1]	NRBFO	75.00

[1] When appropriate, the "Each additional PVC" nonrecurring charge applies in addition to the "Subsequent PVC order charge". (M)

Certain material on this page formerly appeared on Page 8-191.
Certain material previously found on this page can now be found on Pages 8-215 and 8-216.

8. ADVANCED COMMUNICATIONS NETWORKS

8.3 FRAME RELAY SERVICE (T)(M)

8.3.5 RATES AND CHARGES

E. 48 Months

4. Network-To-Network Information Transfer (NNIT) (Cont'd) (T)

	USOC	NONRECURRING CHARGE
• 44.736 Mbps		
- First PVC	NRBF1	$250.00
- Each additional PVC	NRBF2	50.00
- Subsequent PVC(s) order charge, per order[1]	NRBFO	75.00

[1] When appropriate, the "Each additional PVC" nonrecurring charge applies in addition to the "Subsequent PVC order charge". (M)

Certain material on this page formerly appeared on Page 8-191.1.
Certain material previously found on this page can now be found on Page 8-217.

8. ADVANCED COMMUNICATIONS NETWORKS

8.3 FRAME RELAY SERVICE (T)(M)
8.3.5 RATES AND CHARGES
E. 48 Months
4. Network-To-Network Information Transfer (NNIT) (Cont'd) (T)

	USOC	MONTHLY RATE
• 56 or 64 kbps - NNIT, per Port		
- 1 PVC	17TA4	$34.70
Vintage[1]		34.67
- 2 PVCs	17TB4	38.65
Vintage[1]		36.34
- 3 PVCs	17TC4	42.60
Vintage[1]		38.03
- 4 PVCs	17TD4	46.60
Vintage[1]		39.72
- 5 PVCs	17TE4	50.55
Vintage[1]		41.40
- 6 PVCs through 14[2], per PVC	17TG4	0.45
- 15 PVCs through 24[3], per PVC	17TH4	0.25
Vintage[1]		0.15
- Each additional PVC over 24[4], per PVC	17TJ4	0.25
Vintage[1]		0.06

[1] Vintage rate in effect 11/14/94 through 12/13/96.
[2] For each PVC over 5, up to and including 14, add this rate to the monthly rate for 5 PVCs.
[3] For each PVC over 14, up to and including 24, add this rate to the total monthly rate for 14 PVCs.
[4] For each PVC over 24 add this rate to the total monthly rate for 24 PVCs. (M)

Certain material on this page formerly appeared on Page 8-192.
Certain material previously found on this page can now be found on Pages 8-218.

8. ADVANCED COMMUNICATIONS NETWORKS

8.3 FRAME RELAY SERVICE (T)(M)

8.3.5 RATES AND CHARGES

E. 48 Months

4. Network-To-Network Information Transfer (NNIT) (Cont'd) (T)

	USOC	MONTHLY RATE	
• 112 or 128 kbps - NNIT, per Port			
- 1 PVC	17TA4	$77.55	(T)
Vintage[1]		45.39	
- 2 PVCs	17TB4	80.30	
Vintage[1]		48.58	
- 3 PVCs	17TC4	83.05	
Vintage[1]		51.78	
- 4 PVCs	17TD4	85.80	
Vintage[1]		54.98	
- 5 PVCs	17TE4	88.50	
Vintage[1]		58.16	
- 6 PVCs through 14[2], per PVC	17TG4	1.10	
- 15 PVCs through 24[3], per PVC	17TH4	0.80	
Vintage[1]		0.30	
- Each additional PVC over 24[4], per PVC	17TJ4	0.45	
Vintage[1]		0.11	

[1] Vintage rate in effect 11/14/94 through 12/13/96.
[2] For each PVC over 5, up to and including 14, add this rate to the monthly rate for 5 PVCs.
[3] For each PVC over 14, up to and including 24, add this rate to the total monthly rate for 14 PVCs.
[4] For each PVC over 24 add this rate to the total monthly rate for 24 PVCs. (M)

Certain material on this page formerly appeared on Page 8-192.
Certain material previously found on this page can now be found on Page 8-219 and 8-220.

8. ADVANCED COMMUNICATIONS NETWORKS

8.3 FRAME RELAY SERVICE (T)(M)
8.3.5 RATES AND CHARGES
E. 48 Months
4. Network-To-Network Information Transfer (NNIT) (Cont'd) (T)

	USOC	MONTHLY RATE
• 224 or 256 kbps - NNIT, per Port		
- 1 PVC	17TA4	$114.05
Vintage[1]		68.04
- 2 PVCs	17TB4	119.55
Vintage[1]		74.17
- 3 PVCs	17TC4	125.00
Vintage[1]		80.27
- 4 PVCs	17TD4	130.50
Vintage[1]		86.39
- 5 PVCs	17TE4	135.95
Vintage[1]		92.48
- 6 PVCs through 14[2], per PVC	17TG4	2.15
- 15 PVCs through 24[3], per PVC	17TH4	1.50
Vintage[1]		0.56
- Each additional PVC over 24[4], per PVC	17TJ4	0.45
Vintage[1]		0.21

[1] Vintage rate in effect 11/14/94 through 12/13/96.
[2] For each PVC over 5, up to and including 14, add this rate to the monthly rate for 5 PVCs.
[3] For each PVC over 14, up to and including 24, add this rate to the total monthly rate for 14 PVCs.
[4] For each PVC over 24 add this rate to the total monthly rate for 24 PVCs. (M)

Certain material on this page formerly appeared on Page 8-193.
Certain material previously found on this page can now be found on Pages 8-221 and 8-222.

8. ADVANCED COMMUNICATIONS NETWORKS

8.3 FRAME RELAY SERVICE (T)(M)

8.3.5 RATES AND CHARGES

E. 48 Months

4. Network-To-Network Information Transfer (NNIT) (Cont'd) (T)

	USOC	MONTHLY RATE	
• 336 or 384 kbps - NNIT, per Port			
- 1 PVC	17TA4	$155.15	(T)
Vintage[1]		90.68	
- 2 PVCs	17TB4	163.10	
Vintage[1]		99.71	
- 3 PVCs	17TC4	171.10	
Vintage[1]		108.72	
- 4 PVCs	17TD4	179.10	
Vintage[1]		117.76	
- 5 PVCs	17TE4	187.05	
Vintage[1]		126.77	
- 6 PVCs through 14[2], per PVC	17TG4	3.20	
- 15 PVCs through 24[3], per PVC	17TH4	2.30	
Vintage[1]		0.84	
- Each additional PVC over 24[4], per PVC	17TJ4	0.45	
Vintage[1]		0.30	

[1] Vintage rate in effect 11/14/94 through 12/13/96.
[2] For each PVC over 5, up to and including 14, add this rate to the monthly rate for 5 PVCs.
[3] For each PVC over 14, up to and including 24, add this rate to the total monthly rate for 14 PVCs.
[4] For each PVC over 24 add this rate to the total monthly rate for 24 PVCs. (M)

Certain material on this page formerly appeared on Page 8-193.
Certain material previously found on this page can now be found on Page 8-223.

8. ADVANCED COMMUNICATIONS NETWORKS

8.3 FRAME RELAY SERVICE (T)(M)
8.3.5 RATES AND CHARGES
E. 48 Months
4. Network-To-Network Information Transfer (NNIT) (Cont'd) (T)

	USOC	MONTHLY RATE
• 448 or 512 kbps - NNIT, per Port		
- 1 PVC	17TA4	$187.05
Vintage[1]		113.31
- 2 PVCs	17TB4	195.75
Vintage[1]		125.27
- 3 PVCs	17TC4	204.40
Vintage[1]		137.21
- 4 PVCs	17TD4	213.05
Vintage[1]		149.15
- 5 PVCs	17TE4	221.75
Vintage[1]		161.09
- 6 PVCs through 14[2], per PVC	17TG4	3.40
- 15 PVCs through 24[3], per PVC	17TH4	2.30
Vintage[1]		1.11
- Each additional PVC over 24[4], per PVC	17TJ4	0.45
Vintage[1]		0.42

[1] Vintage rate in effect 11/14/94 through 12/13/96.
[2] For each PVC over 5, up to and including 14, add this rate to the monthly rate for 5 PVCs.
[3] For each PVC over 14, up to and including 24, add this rate to the total monthly rate for 14 PVCs.
[4] For each PVC over 24 add this rate to the total monthly rate for 24 PVCs. (M)

Certain material on this page formerly appeared on Page 8-194.
Certain material previously found on this page can now be found on Page 8-224.

8. ADVANCED COMMUNICATIONS NETWORKS

8.3 FRAME RELAY SERVICE (T)(M)

8.3.5 RATES AND CHARGES

E. 48 Months

4. Network-To-Network Information Transfer (NNIT) (Cont'd) (T)

	USOC	MONTHLY RATE	
• 672 or 768 kbps - NNIT, per Port			
- 1 PVC	17TA4	$255.50	(T)
Vintage[1]		159.27	
- 2 PVCs	17TB4	267.35	
Vintage[1]		177.70	
- 3 PVCs	17TC4	279.25	
Vintage[1]		196.13	
- 4 PVCs	17TD4	291.10	
Vintage[1]		214.56	
- 5 PVCs	17TE4	302.95	
Vintage[1]		232.99	
- 6 PVCs through 14[2], per PVC	17TG4	3.40	
- 15 PVCs through 24[3], per PVC	17TH4	2.30	
- Each additional PVC over 24[4], per PVC	17TJ4	0.45	

[1] Vintage rate in effect 11/14/94 through 12/13/96.
[2] For each PVC over 5, up to and including 14, add this rate to the monthly rate for 5 PVCs.
[3] For each PVC over 14, up to and including 24, add this rate to the total monthly rate for 14 PVCs.
[4] For each PVC over 24 add this rate to the total monthly rate for 24 PVCs. (M)

Certain material on this page formerly appeared on Page 8-194.
Certain material previously found on this page can now be found on Page 8-225.

8. ADVANCED COMMUNICATIONS NETWORKS

Certain material previously found on this page can now be found on Page 8-226.

8. ADVANCED COMMUNICATIONS NETWORKS

8.3 FRAME RELAY SERVICE (T)(M)
8.3.5 RATES AND CHARGES
E. 48 Months
4. Network-To-Network Information Transfer (NNIT) (Cont'd) (T)

	USOC	MONTHLY RATE
• 1.544 Mbps - NNIT, per Port		
- 1 PVC	17TA4	$191.65
Vintage[1]		106.17
- 2 PVCs	17TB4	225.40
Vintage[1]		156.28
- 3 PVCs	17TC4	259.15
Vintage[1]		206.40
- 4 PVCs	17TD4	292.90
Vintage[1]		256.49
- 5 PVCs	17TE4	326.70
Vintage[1]		306.61
- 6 PVCs through 14[2], per PVC	17TG4	17.35
- 15 PVCs through 24[3], per PVC	17TH4	4.55
Vintage[1]		4.12
- Each additional PVC over 24[4], per PVC	17TJ4	0.45
Vintage[1]		0.14

[1] Vintage rate in effect 11/14/94 through 12/13/96.
[2] For each PVC over 5, up to and including 14, add this rate to the monthly rate for 5 PVCs.
[3] For each PVC over 14, up to and including 24, add this rate to the total monthly rate for 14 PVCs.
[4] For each PVC over 24 add this rate to the total monthly rate for 24 PVCs. (M)

Certain material on this page formerly appeared on Page 8-195.
Certain material previously found on this page can now be found on Pages 8-227 and 8-228.

8. ADVANCED COMMUNICATIONS NETWORKS

8.3 FRAME RELAY SERVICE (T)(M)

8.3.5 RATES AND CHARGES

E. 48 Months

4. Network-To-Network Information Transfer (NNIT) (Cont'd) (T)

	USOC	MONTHLY RATE
• 44.736 Mbps - NNIT, per Port		
- 1 PVC	17TU4	$3,467.50
- 2 PVCs through 50[1], per PVC	17TV4	27.38
- 51 PVCs through 140[2], per PVC	17TW4	7.30
- 141 PVCs through 240[3], per PVC	17TY4	3.65
- 241 PVCs through 500[4], per PVC	17TZ4	1.83

[1] For each PVC over 1, up to and including 50, add this rate to the monthly rate for 1 PVC.

[2] For each PVC over 50, up to and including 140, add this rate to the total monthly rate for 50 PVCs.

[3] For each PVC over 140, up to and including 240, add this rate to the total monthly rate for 140 PVCs.

[4] For each PVC over 240, up to and including 500, add this rate to the total monthly rate for 240 PVCs. (M)

Certain material on this page formerly appeared on Page 8-195.1.
Certain material previously found on this page can now be found on Pages 8-229 and 8-230.

8. ADVANCED COMMUNICATIONS NETWORKS

8.3 FRAME RELAY SERVICE (T)(M)
8.3.5 RATES AND CHARGES (T)
E. 48 Months (Cont'd)

	USOC	NONRECURRING CHARGE	MONTHLY RATE	
5. Central Office Connecting Channel				
• Per connection between a Multiplexer and FRS Port or between a Company facility port and an FRS Port				
- For speeds up to 1.544 Mbps	CU5VR	$25.00	$ 0.60	
- For speeds up to 44.736 Mbps	CU5VR	50.00	9.13	
6. Transport Channels	N/A	[1]	[1]	(T)
7. Optional Features and Functions				
• Customer Network Management (CNM)				
- Per workstation registered address initial setup	NM6X4	15.00	61.14	
- Subsequent CNM order charge, per workstation registered address change or addition of CNM to existing FRS[2]	NR9FM	38.00	–	

[1] See Section 7 for Transport Channel rates and regulations.

[2] When adding CNM to existing FRS, the Subsequent CNM Order Charge applies in addition to the Nonrecurring Charge for the initial setup of CNM. (M)

Certain material on this page formerly appeared on Page 8-196.
Certain material previously found on this page can now be found on Pages 8-231 and 8-232.

8. ADVANCED COMMUNICATIONS NETWORKS

8.3 FRAME RELAY SERVICE (S-y)

8.3.5 RATES AND CHARGES

E. 48 Months

7. Optional Features and Functions (Cont'd)

	USOC	NONRECURRING CHARGE	MONTHLY RATE	
• Priority UNIT PVC[1] (Grandfathered), per PVC				(S-y) (C-y)
- 56 or 64 kbps	PV7X4	$50.00	$4.56	(S-y)
- 112 or 128 kbps	PV7X4	50.00	5.32	
- 224 or 256 kbps	PV7X4	50.00	6.09	
- 336 or 384 kbps	PV7X4	50.00	6.84	
- 448 or 512 kbps	PV7X4	50.00	7.60	
- 672 or 768 kbps	PV7X4	50.00	8.37	
- 1.544 Mbps	PV7X4	50.00	9.13	
- 44.736 Mbps	PV7X4	50.00	9.13	

[1] Priority PVC rates and charges apply in addition to the UNIT PVC rates and charges set forth preceding. (S-y)

(y) Reissued matter filed under Transmittal No. 28, to become effective December 6, 2000.

(Filed under Transmittal 30.)

8. ADVANCED COMMUNICATIONS NETWORKS

Certain material previously found on this page can now be found on Page 8-234.

8. ADVANCED COMMUNICATIONS NETWORKS

8.3 FRAME RELAY SERVICE (S-y)
8.3.5 RATES AND CHARGES (Cont'd) (T-y)

(D-y)

(y) Reissued matter filed under Transmittal No. 28, to become effective December 6, 2000.

8. ADVANCED COMMUNICATIONS NETWORKS

8.3 FRAME RELAY SERVICE (S-y)
8.3.5 RATES AND CHARGES (Cont'd)

F. 60 Months

	USOC	NONRECURRING CHARGE	MONTHLY RATE	
1. Access Link, per Access Link				
• 56 or 64 kbps	L7AX5	$450.00	$ 42.30	
- Vintage[1]			15.73	
- Vintage[2]			17.34	
- Vintage[3]			36.68	(S-y)
• 2-Wire 128 kbps				(T-y)
(Grandfathered)	L7TA5	450.00	36.00	(C-y)
• 1.544 Mbps	L7AX5	450.00	113.85	(S-y)
- Vintage[1]			104.19	
- Vintage[2]			105.90	
2. Stand-Alone Access Link, per Access Link				
• 56 or 64 kbps	NNLX5	450.00	42.30	
- Vintage[3]			36.68	
• 1.544 Mbps	NNLX5	450.00	113.85	

[1] Vintage rate in effect 10/12/92 through 1/16/94.
[2] Vintage rate in effect 1/17/94 through 11/13/94.
[3] Vintage rate in effect 11/14/94 through 12/13/96. (S-y)

(y) Reissued matter filed under Transmittal No. 28, to become effective December 6, 2000.

8. ADVANCED COMMUNICATIONS NETWORKS

8.3 FRAME RELAY SERVICE (T)(M)
8.3.5 RATES AND CHARGES
F. 60 Months (Cont'd) (T)

3. User-To-Network Information Transfer (UNIT)

	USOC	NONRECURRING CHARGE	
• 56 or 64 kbps			
- First PVC	NRBF1	$50.00	
- Each additional PVC	NRBF2	20.00	
- Subsequent PVC(s) order charge, per order[1]	NRBFO	75.00	(T)

[1] When appropriate, the "Each additional PVC" nonrecurring charge applies in addition to the "Subsequent PVC order charge". (T) (M)

Certain material on this page formerly appeared on Page 8-199.
Certain material previously found on this page can now be found on Page 8-237.

8. ADVANCED COMMUNICATIONS NETWORKS

8.3 FRAME RELAY SERVICE (S-y)

8.3.5 RATES AND CHARGES

F. 60 Months

3. User-To-Network Information Transfer (UNIT) (Cont'd)

	USOC	NONRECURRING CHARGE	
• 2-Wire 128 kbps (Grandfathered)			(C-y)
- First PVC	NRBF7	$300.00	(S-y)
- Each additional PVC	NRBF8	20.00	
- Subsequent PVC(s) order charge, per order[1]	NRBF9	75.00	
• 112 or 128 kbps (4-Wire), 224 or 256 kbps, 336 or 384 kbps, 448 or 512 kbps, and 672 or 768 kbps			
- First PVC	NRBF1	250.00	
- Each additional PVC	NRBF2	20.00	
- Subsequent PVC(s) order charge, per order[1]	NRBFO	75.00	
• 1.544 Mbps			
- First PVC	NRBF1	50.00	
- Each additional PVC	NRBF2	20.00	
- Subsequent PVC(s) order charge, per order[1]	NRBFO	75.00	

[1] When appropriate, the "Each additional PVC" nonrecurring charge applies in addition to the "Subsequent PVC order charge". (S-y)

(y) Reissued matter filed under Transmittal No. 28, to become effective December 6, 2000.

8. ADVANCED COMMUNICATIONS NETWORKS

8.3 FRAME RELAY SERVICE (S-y)

8.3.5 RATES AND CHARGES

F. 60 Months

3. User-To-Network Information Transfer (UNIT) (Cont'd)

	USOC	NONRECURRING CHARGE	
• 44.736 Mbps			
- First PVC	NRBF1	$250.00	
- Each additional PVC	NRBF2	50.00	
- Subsequent PVC(s) order charge, per order[1]	NRBFO	75.00	(S-y)
• Fault Tolerant Service (Grandfathered), per UNIT			(C-y) (S-y)
- Initial Service Establishment	NRBF4	500.00	
- Subsequent Service Establishment	NRBF5	50.00	
- Activation and Restoral	NRBF6	500.00	

[1] When appropriate, the "Each additional PVC" nonrecurring charge applies in addition to the "Subsequent PVC order charge". (S-y)

(y) Reissued matter filed under Transmittal No. 28, to become effective December 6, 2000.

(Filed under Transmittal 30.)

8. ADVANCED COMMUNICATIONS NETWORKS

8.3 FRAME RELAY SERVICE (S-y)

8.3.5 RATES AND CHARGES

F. 60 Months

3. User-To-Network Information Transfer (UNIT) (Cont'd)

	USOC	MONTHLY RATE	
• 56 or 64 kbps - UNIT, per Port			
- 0 PVCs, used with Fault Tolerant Service	17T95	$31.50	
- 1 PVC	17TA5	35.35	
- 2 PVCs	17TB5	40.08	
- 3 PVCs	17TC5	43.01	
- 4 PVCs	17TD5	45.95	
- 5 PVCs	17TE5	48.86	
- 6 PVCs through 14[1], per PVC	17TG5	1.12	
Vintage[2]		1.00	
- 15 PVCs through 24[3], per PVC	17TH5	0.24	
Vintage[2]		0.21	
- Each additional PVC over 24[4], per PVC	17TJ5	0.25	
Vintage[2]		0.09	
Vintage[5]		0.10	(S-y)
• 2-Wire 128 kbps – UNIT (Grandfathered), per Port			(C-y) (S-y)
- 1 PVC	18TB5	76.00	
- 2 through 8 PVCs[6]	18TC5	6.64	

[1] For each PVC over 5, up to and including 14, add this rate to the monthly rate for 5 PVCs.
[2] Vintage rate in effect 1/17/94 through 11/13/94.
[3] For each PVC over 14, up to and including 24, add this rate to the total monthly rate for 14 PVCs.
[4] For each PVC over 24 add this rate to the total monthly rate for 24 PVCs.
[5] Vintage rate in effect 11/14/94 through 12/13/96.
[6] For each PVC over 1, up to and including 8, add this rate to the monthly rate for 1 PVC. (S-y)

(y) Reissued matter filed under Transmittal No. 28, to become effective December 6, 2000.

8. ADVANCED COMMUNICATIONS NETWORKS

8.3 FRAME RELAY SERVICE (T)(M)
8.3.5 RATES AND CHARGES
F. 60 Months
3. User-To-Network Information Transfer (UNIT) (Cont'd) (T)

	USOC	MONTHLY RATE
• 112 or 128 kbps (4-Wire) - UNIT, per Port		
- 1 PVC	17TA5	$108.00
Vintage[1]		63.82
- 2 PVCs	17TB5	110.70
Vintage[1]		66.97
- 3 PVCs	17TC5	113.40
Vintage[1]		70.12
- 4 PVCs	17TD5	116.10
Vintage[1]		73.28
- 5 PVCs	17TE5	118.80
Vintage[1]		76.42
- 6 PVCs through 14[2], per PVC	17TG5	1.10
- 15 PVCs through 24[3], per PVC	17TH5	0.75
Vintage[1]		0.41
- Each additional PVC over 24[4], per PVC	17TJ5	0.45
Vintage[1]		0.17

[1] Vintage rate in effect 1/14/94 through 12/13/96.
[2] For each PVC over 5, up to and including 14, add this rate to the monthly rate for 5 PVCs.
[3] For each PVC over 14, up to and including 24, add this rate to the total monthly rate for 14 PVCs.
[4] For each PVC over 24 add this rate to the total monthly rate for 24 PVCs. (M)

Certain material on this page formerly appeared on Page 8-202.
Certain material previously found on this page can now be found on Pages 8-244 and 8-245.

8. ADVANCED COMMUNICATIONS NETWORKS

8.3 FRAME RELAY SERVICE (T)(M)
8.3.5 RATES AND CHARGES
F. 60 Months
3. User-To-Network Information Transfer (UNIT) (Cont'd) (T)

	USOC	MONTHLY RATE
• 224 or 256 kbps - UNIT, per Port		
- 1 PVC	17TA5	$144.00
Vintage[1]		86.15
- 2 PVCs	17TB5	149.40
Vintage[1]		92.19
- 3 PVCs	17TC5	154.80
Vintage[1]		98.22
- 4 PVCs	17TD5	160.20
Vintage[1]		104.25
- 5 PVCs	17TE5	165.60
Vintage[1]		110.27
- 6 PVCs through 14[2], per PVC	17TG5	2.10
- 15 PVCs through 24[3], per PVC	17TH5	1.50
Vintage[1]		0.92
- Each additional PVC over 24[4], per PVC	17TJ5	0.45
Vintage[1]		0.34

[1] Vintage rate in effect 11/14/94 through 12/13/96.
[2] For each PVC over 5, up to and including 14, add this rate to the monthly rate for 5 PVCs.
[3] For each PVC over 14, up to and including 24, add this rate to the total monthly rate for 14 PVCs.
[4] For each PVC over 24 add this rate to the total monthly rate for 24 PVCs. (M)

Certain material on this page formerly appeared on Page 8-203.
Certain material previously found on this page can now be found on Pages 8-246 and 8-247.

8. ADVANCED COMMUNICATIONS NETWORKS

8.3 FRAME RELAY SERVICE (T)(M)

8.3.5 RATES AND CHARGES

F. 60 Months

3. User-To-Network Information Transfer (UNIT) (Cont'd) (T)

	USOC	MONTHLY RATE	
• 336 or 384 kbps - UNIT, per Port			
- 1 PVC	17TA5	$180.00	(T)
Vintage[1]		108.48	
- 2 PVCs	17TB5	187.90	
Vintage[1]		117.39	
- 3 PVCs	17TC5	195.75	
Vintage[1]		126.30	
- 4 PVCs	17TD5	203.65	
Vintage[1]		135.99	
- 5 PVCs	17TE5	211.50	
Vintage[1]		145.68	
- 6 PVCs through 14[2], per PVC	17TG5	3.15	
- 15 PVCs through 24[3], per PVC	17TH5	2.25	
Vintage[1]		1.37	
- Each additional PVC over 24[4], per PVC	17TJ5	0.45	

[1] Vintage rate in effect 11/14/94 through 12/13/96.
[2] For each PVC over 5, up to and including 14, add this rate to the monthly rate for 5 PVCs.
[3] For each PVC over 14, up to and including 24, add this rate to the total monthly rate for 14 PVCs.
[4] For each PVC over 24 add this rate to the total monthly rate for 24 PVCs. (M)

Certain material on this page formerly appeared on Page 8-203.
Certain material previously found on this page can now be found on Page 8-248.

8. ADVANCED COMMUNICATIONS NETWORKS

8.3 FRAME RELAY SERVICE (T)(M)

8.3.5 RATES AND CHARGES

F. 60 Months

3. User-To-Network Information Transfer (UNIT) (Cont'd) (T)

	USOC	MONTHLY RATE
• 448 or 512 kbps - UNIT, per Port		
- 1 PVC	17TA5	$211.50
Vintage[1]		130.82
- 2 PVCs	17TB5	220.05
Vintage[1]		142.60
- 3 PVCs	17TC5	228.60
Vintage[1]		154.38
- 4 PVCs	17TD5	237.15
Vintage[1]		168.68
- 5 PVCs	17TE5	245.70
Vintage[1]		182.97
- 6 PVCs through 14[2], per PVC	17TG5	3.40
- 15 PVCs through 24[3], per PVC	17TH5	2.25
Vintage[1]		1.83
- Each additional PVC over 24[4], per PVC	17TJ5	0.45

[1] Vintage rate in effect 11/14/94 through 12/13/96.
[2] For each PVC over 5, up to and including 14, add this rate to the monthly rate for 5 PVCs.
[3] For each PVC over 14, up to and including 24, add this rate to the total monthly rate for 14 PVCs.
[4] For each PVC over 24 add this rate to the total monthly rate for 24 PVCs. (M)

Certain material on this page formerly appeared on Page 8-204.
Certain material previously found on this page can now be found on Page 8-249.

8. ADVANCED COMMUNICATIONS NETWORKS

8.3 FRAME RELAY SERVICE (T)(M)

8.3.5 RATES AND CHARGES

F. 60 Months

3. User-To-Network Information Transfer (UNIT) (Cont'd) (T)

	USOC	MONTHLY RATE	
• 672 or 768 kbps - UNIT, per Port			
- 1 PVC	17TA5	$279.00	(T)
Vintage[1]		176.14	
- 2 PVCs	17TB5	291.60	
Vintage[1]		194.32	
- 3 PVCs	17TC5	304.20	
Vintage[1]		212.49	
- 4 PVCs	17TD5	316.80	
Vintage[1]		233.38	
- 5 PVCs	17TE5	329.40	
Vintage[1]		254.29	
- 6 PVCs through 14[2], per PVC	17TG5	3.60	
- 15 PVCs through 24[3], per PVC	17TH5	2.50	
- Each additional PVC over 24[4], per PVC	17TJ5	0.75	

[1] Vintage rate in effect 11/14/94 through 12/13/96.
[2] For each PVC over 5, up to and including 14, add this rate to the monthly rate for 5 PVCs.
[3] For each PVC over 14, up to and including 24, add this rate to the total monthly rate for 14 PVCs.
[4] For each PVC over 24 add this rate to the total monthly rate for 24 PVCs. (M)

Certain material on this page formerly appeared on Page 8-204.
Certain material previously found on this page can now be found on Page 8-250.

8. ADVANCED COMMUNICATIONS NETWORKS

Certain material previously found on this page can now be found on Page 8-251.

8. ADVANCED COMMUNICATIONS NETWORKS

8.3 FRAME RELAY SERVICE (T)(M)
8.3.5 RATES AND CHARGES
F. 60 Months
3. User-To-Network Information Transfer (UNIT) (Cont'd) (T)

	USOC	MONTHLY RATE
• 1.544 Mbps - UNIT, per Port		
- 0 PVCs, used with Fault Tolerant Service	17T95	$193.50
- 1 PVC	17TA5	216.00
Vintage[1]		213.77
- 2 PVCs	17TB5	249.30
Vintage[1]		173.89
- 3 PVCs	17TC5	282.60
Vintage[1]		224.02
- 4 PVCs	17TD5	315.90
Vintage[1]		273.44
- 5 PVCs	17TE5	349.20
Vintage[1]		322.86
- 6 PVCs through 14[2], per PVC	17TG5	17.10
Vintage[3]		16.62
- 15 PVCs through 24[4], per PVC	17TH5	4.50
- Each additional PVC over 24[5], per PVC	17TJ5	0.45
Vintage[1]		0.23

[1] Vintage rate in effect 11/14/94 through 12/13/96.
[2] For each PVC over 5, up to and including 14, add this rate to the monthly rate for 5 PVCs.
[3] Vintage rate in effect 1/17/94 through 11/13/94.
[4] For each PVC over 14, up to and including 24, add this rate to the total monthly rate for 14 PVCs.
[5] For each PVC over 24 add this rate to the total monthly rate for 24 PVCs. (M)

Certain material on this page formerly appeared on Page 8-205.
Certain material previously found on this page can now be found on Pages 8-252 and 8-253.

8. ADVANCED COMMUNICATIONS NETWORKS

8.3 FRAME RELAY SERVICE (T)(M)

8.3.5 RATES AND CHARGES

F. 60 Months

3. User-To-Network Information Transfer (UNIT) (Cont'd) (T)

	USOC	MONTHLY RATE
• 44.736 Mbps - UNIT, per Port		
- 0 PVCs, used with Fault Tolerant Service	17T95	$3,150.00
- 1 PVC	17TU5	3,420.00
- 2 PVCs through 50[1], per PVC	17TV5	27.00
- 51 PVCs through 140[2], per PVC	17TW5	7.20
- 141 PVCs through 240[3], per PVC	17TY5	3.60
- 241 PVCs through 500[4], per PVC	17TZ5	1.80

[1] For each PVC over 1, up to and including 50, add this rate to the monthly rate for 1 PVC.
[2] For each PVC over 50, up to and including 140, add this rate to the total monthly rate for 50 PVCs.
[3] For each PVC over 140, up to and including 240, add this rate to the total monthly rate for 140 PVCs.
[4] For each PVC over 240, up to and including 500, add this rate to the total monthly rate for 240 PVCs. (M)

Certain material on this page formerly appeared on Page 8-206.
Certain material previously found on this page can now be found on Pages 8-254 and 8-255.

8. ADVANCED COMMUNICATIONS NETWORKS

8.3 FRAME RELAY SERVICE (T)(M)
8.3.5 RATES AND CHARGES (T)

F. 60 Months (Cont'd)

4. Network-To-Network Information Transfer (NNIT)

	USOC	NONRECURRING CHARGE
• 56 or 64 kbps		
- First PVC	NRBF1	$ 50.00
- Each additional PVC	NRBF2	20.00
- Subsequent PVC(s) order charge, per order[1]	NRBFO	75.00
• 112 or 128 kbps, 224 or 256 kbps, 336 or 384 kbps, 448 or 512 kbps, and 672 or 768 kbps		
- First PVC	NRBF1	250.00
- Each additional PVC	NRBF2	20.00
- Subsequent PVC(s) order charge, per order[1]	NRBFO	75.00
• 1.544 Mbps		
- First PVC	NRBF1	50.00
- Each additional PVC	NRBF2	20.00
- Subsequent PVC(s) order charge, per order[1]	NRBFO	75.00

[1] When appropriate, the "Each additional PVC" nonrecurring charge applies in addition to the "Subsequent PVC order charge". (M)

Certain material on this page formerly appeared on Page 8-207.
Certain material previously found on this page can now be found on Pages 8-256 and 8-257.

8. ADVANCED COMMUNICATIONS NETWORKS

8.3 FRAME RELAY SERVICE (T)(M)

8.3.5 RATES AND CHARGES

F. 60 Months

4. Network-To-Network Information Transfer (NNIT) (Cont'd) (T)

	USOC	NONRECURRING CHARGE
• 44.736 Mbps		
- First PVC	NRBF1	$250.00
- Each additional PVC	NRBF2	50.00
- Subsequent PVC(s) order charge, per order[1]	NRBFO	75.00

[1] When appropriate, the "Each additional PVC" nonrecurring charge applies in addition to the "Subsequent PVC order charge". (M)

Certain material on this page formerly appeared on Page 8-207.1.
Certain material previously found on this page can now be found on Page 8-258.

8. ADVANCED COMMUNICATIONS NETWORKS

Certain material previously found on this page can now be found on Page 8-259.

8. ADVANCED COMMUNICATIONS NETWORKS

8.3 FRAME RELAY SERVICE (T)(M)

8.3.5 RATES AND CHARGES

F. 60 Months

4. Network-To-Network Information Transfer (NNIT) (Cont'd) (T)

	USOC	MONTHLY RATE
• 56 or 64 kbps - NNIT, per Port		
- 1 PVC	17TA5	$34.20
Vintage[1]		34.19
- 2 PVCs	17TB5	38.10
Vintage[1]		35.85
- 3 PVCs	17TC5	42.05
Vintage[1]		37.51
- 4 PVCs	17TD5	45.95
Vintage[1]		39.18
- 5 PVCs	17TE5	49.85
Vintage[1]		40.83
- 6 PVCs through 14[2], per PVC	17TG5	0.45
- 15 PVCs through 24[3], per PVC	17TH5	0.25
Vintage[1]		0.14
- Each additional PVC over 24[4], per PVC	17TJ5	0.25
Vintage[1]		0.06

[1] Vintage rate in effect 11/14/94 through 12/13/96.
[2] For each PVC over 5, up to and including 14, add this rate to the monthly rate for 5 PVCs.
[3] For each PVC over 14, up to and including 24, add this rate to the total monthly rate for 14 PVCs.
[4] For each PVC over 24 add this rate to the total monthly rate for 24 PVCs. (M)

Certain material on this page formerly appeared on Page 8-208.
Certain material previously found on this page can now be found on Page 8-260.

8. ADVANCED COMMUNICATIONS NETWORKS

8.3 FRAME RELAY SERVICE (T)(M)

8.3.5 RATES AND CHARGES

F. 60 Months

4. Network-To-Network Information Transfer (NNIT) (Cont'd) (T)

	USOC	MONTHLY RATE	
• 112 or 128 kbps - NNIT, per Port			
- 1 PVC	17TA5	$76.50	(T)
Vintage[1]		44.77	
- 2 PVCs	17TB5	79.20	
Vintage[1]		47.92	
- 3 PVCs	17TC5	81.90	
Vintage[1]		51.08	
- 4 PVCs	17TD5	84.60	
Vintage[1]		54.23	
- 5 PVCs	17TE5	87.30	
Vintage[1]		57.37	
- 6 PVCs through 14[2], per PVC	17TG5	1.10	
- 15 PVCs through 24[3], per PVC	17TH5	0.75	
Vintage[1]		0.30	
- Each additional PVC over 24[4], per PVC	17TJ5	0.45	
Vintage[1]		0.11	

[1] Vintage rate in effect 11/14/94 through 12/13/96.
[2] For each PVC over 5, up to and including 14, add this rate to the monthly rate for 5 PVCs.
[3] For each PVC over 14, up to and including 24, add this rate to the total monthly rate for 14 PVCs.
[4] For each PVC over 24 add this rate to the total monthly rate for 24 PVCs. (M)

Certain material on this page formerly appeared on Page 8-208.
Certain material previously found on this page can now be found on Page 8-261.

8. ADVANCED COMMUNICATIONS NETWORKS

8.3 FRAME RELAY SERVICE (T)(M)
8.3.5 RATES AND CHARGES
F. 60 Months
4. Network-To-Network Information Transfer (NNIT) (Cont'd) (T)

	USOC	MONTHLY RATE
• 224 or 256 kbps - NNIT, per Port		
- 1 PVC	17TA5	$112.50
Vintage[1]		67.10
- 2 PVCs	17TB5	117.90
Vintage[1]		73.15
- 3 PVCs	17TC5	123.30
Vintage[1]		79.17
- 4 PVCs	17TD5	128.70
Vintage[1]		85.20
- 5 PVCs	17TE5	134.10
Vintage[1]		91.22
- 6 PVCs through 14[2], per PVC	17TG5	2.10
- 15 PVCs through 24[3], per PVC	17TH5	1.50
Vintage[1]		0.55
- Each additional PVC over 24[4], per PVC	17TJ5	0.45
Vintage[1]		0.21

[1] Vintage rate in effect 11/14/94 through 12/13/96.
[2] For each PVC over 5, up to and including 14, add this rate to the monthly rate for 5 PVCs.
[3] For each PVC over 14, up to and including 24, add this rate to the total monthly4rate for 14 PVCs.
[4] For each PVC over 24 add this rate to the total monthly rate for 24 PVCs. (M)

Certain material on this page formerly appeared on Page 8-209.
Certain material previously found on this page can now be found on Page 8-262.

8. ADVANCED COMMUNICATIONS NETWORKS

8.3 FRAME RELAY SERVICE (T)(M)

8.3.5 RATES AND CHARGES

F. 60 Months

4. Network-To-Network Information Transfer (NNIT) (Cont'd) (T)

	USOC	MONTHLY RATE	
• 336 or 384 kbps - NNIT, per Port			
- 1 PVC	17TA5	$153.00	(T)
Vintage[1]		89.43	
- 2 PVCs	17TB5	160.90	
Vintage[1]		98.34	
- 3 PVCs	17TC5	168.75	
Vintage[1]		107.24	
- 4 PVCs	17TD5	176.65	
Vintage[1]		116.15	
- 5 PVCs	17TE5	184.50	
Vintage[1]		125.04	
- 6 PVCs through 14[2], per PVC	17TG5	3.15	
- 15 PVCs through 24[3], per PVC	17TH5	2.25	
Vintage[1]		0.83	
- Each additional PVC over 24[4], per PVC	17TJ5	0.45	
Vintage[1]		0.30	

[1] Vintage rate in effect 11/14/94 through 12/13/96.
[2] For each PVC over 5, up to and including 14, add this rate to the monthly rate for 5 PVCs.
[3] For each PVC over 14, up to and including 24, add this rate to the total monthly4rate for 14 PVCs.
[4] For each PVC over 24 add this rate to the total monthly rate for 24 PVCs. (M)

Certain material on this page formerly appeared on Page 8-209.
Certain material previously found on this page can now be found on Pages 8-263 and 8-264.

8. ADVANCED COMMUNICATIONS NETWORKS

8.3 FRAME RELAY SERVICE (T)(M)

8.3.5 RATES AND CHARGES

F. 60 Months

4. Network-To-Network Information Transfer (NNIT) (Cont'd) (T)

	USOC	MONTHLY RATE
• 448 or 512 kbps - NNIT, per Port		
- 1 PVC	17TA5	$184.50
Vintage[1]		117.76
- 2 PVCs	17TB5	193.05
Vintage[1]		123.55
- 3 PVCs	17TC5	201.60
Vintage[1]		135.33
- 4 PVCs	17TD5	210.15
Vintage[1]		147.11
- 5 PVCs	17TE5	218.70
Vintage[1]		158.89
- 6 PVCs through 14[2], per PVC	17TG5	3.40
- 15 PVCs through 24[3], per PVC	17TH5	2.25
Vintage[1]		1.10
- Each additional PVC over 24[4], per PVC	17TJ5	0.45
Vintage[1]		0.41

[1] Vintage rate in effect 11/14/94 through 12/13/96.
[2] For each PVC over 5, up to and including 14, add this rate to the monthly rate for 5 PVCs.
[3] For each PVC over 14, up to and including 24, add this rate to the total monthly rate for 14 PVCs.
[4] For each PVC over 24 add this rate to the total monthly rate for 24 PVCs. (M)

Certain material on this page formerly appeared on Page 8-210.
Certain material previously found on this page can now be found on Pages 8-265 and 8-266.

8. ADVANCED COMMUNICATIONS NETWORKS

8.3 FRAME RELAY SERVICE (T)(M)

8.3.5 RATES AND CHARGES

F. 60 Months

4. Network-To-Network Information Transfer (NNIT) (Cont'd) (T)

	USOC	MONTHLY RATE	
• 672 or 768 kbps - NNIT, per Port			
- 1 PVC	17TA5	$252.00	(T)
Vintage[1]		157.09	
- 2 PVCs	17TB5	263.70	
Vintage[1]		175.27	
- 3 PVCs	17TC5	275.40	
Vintage[1]		193.45	
- 4 PVCs	17TD5	287.10	
Vintage[1]		211.62	
- 5 PVCs	17TE5	298.80	
Vintage[1]		229.80	
- 6 PVCs through 14[2], per PVC	17TG5	3.40	
- 15 PVCs through 24[3], per PVC	17TH5	2.25	
- Each additional PVC over 24[4], per PVC	17TJ5	0.45	

[1] Vintage rate in effect 11/14/94 through 12/13/96.
[2] For each PVC over 5, up to and including 14, add this rate to the monthly rate for 5 PVCs.
[3] For each PVC over 14, up to and including 24, add this rate to the total monthly rate for 14 PVCs.
[4] For each PVC over 24 add this rate to the total monthly rate for 24 PVCs. (M)

Certain material on this page formerly appeared on Page 8-210.
Certain material previously found on this page can now be found on Pages 8-267 and 8-268.

8. ADVANCED COMMUNICATIONS NETWORKS

8.3 FRAME RELAY SERVICE (T)(M)

8.3.5 RATES AND CHARGES

F. 60 Months

4. Network-To-Network Information Transfer (NNIT) (Cont'd) (T)

	USOC	MONTHLY RATE
• 1.544 Mbps - NNIT, per Port		
- 1 PVC	17TA5	$189.00
Vintage[1]		104.72
- 2 PVCs	17TB5	222.30
Vintage[1]		154.14
- 3 PVCs	17TC5	255.60
Vintage[1]		203.57
- 4 PVCs	17TD5	288.90
Vintage[1]		252.98
- 5 PVCs	17TE5	322.20
Vintage[1]		302.41
- 6 PVCs through 14[2], per PVC	17TG5	17.10
- 15 PVCs through 24[3], per PVC	17TH5	4.50
Vintage[1]		4.06
- Each additional PVC over 24[4], per PVC	17TJ5	0.45
Vintage[1]		0.14

[1] Vintage rate in effect 11/14/94 through 12/13/96.
[2] For each PVC over 5, up to and including 14, add this rate to the monthly rate for 5 PVCs.
[3] For each PVC over 14, up to and including 24, add this rate to the total monthly rate for 14 PVCs.
[4] For each PVC over 24 add this rate to the total monthly rate for 24 PVCs. (M)

Certain material on this page formerly appeared on Page 8-211.
Certain material previously found on this page can now be found on Pages 8-269 and 8-270.

8. ADVANCED COMMUNICATIONS NETWORKS

8.3 FRAME RELAY SERVICE (T)(M)

8.3.5 RATES AND CHARGES

F. 60 Months

4. Network-To-Network Information Transfer (NNIT) (Cont'd) (T)

	USOC	MONTHLY RATE
• 44.736 Mbps - NNIT, per Port		
- 1 PVC	17TU5	$3,420.00
- 2 PVCs through 50[1], per PVC	17TV5	27.00
- 51 PVCs through 140[2], per PVC	17TW5	7.20
- 141 PVCs through 240[3], per PVC	17TY5	3.60
- 241 PVCs through 500[4], per PVC	17TZ5	1.80

[1] For each PVC over 1, up to and including 50, add this rate to the monthly rate for 1 PVC.
[2] For each PVC over 50, up to and including 140, add this rate to the total monthly rate for 50 PVCs.
[3] For each PVC over 140, up to and including 240, add this rate to the total monthly rate for 140 PVCs.
[4] For each PVC over 240, up to and including 500, add this rate to the total monthly rate for 240 PVCs. (M)

Certain material on this page formerly appeared on Page 8-211.1.
Certain material previously found on this page can now be found on Pages 8-271 and 8-272.

8. ADVANCED COMMUNICATIONS NETWORKS

8.3 FRAME RELAY SERVICE (T)(M)
8.3.5 RATES AND CHARGES (T)
F. 60 Months (Cont'd)

	USOC	NONRECURRING CHARGE	MONTHLY RATE	
5. Central Office Connecting Channel				
• Per connection between a Multiplexer and FRS Port or between a Company facility port and an FRS Port				
- For speeds up to 1.544 Mbps	CU5WR	$25.00	$ 0.59	
- For speeds up to 44.736 Mbps	CU5WR	50.00	9.00	
6. Transport Channels	N/A	[1]	[1]	(T)
7. Optional Features and Functions				
• Customer Network Management (CNM)				
- Per workstation registered address initial setup	NM6X5	15.00	60.30	
- Subsequent CNM order charge, per workstation registered address change or addition of CNM to existing FRS[2]	NR9FM	38.00	–	

[1] See Section 7 for Transport Channel rates and regulations.

[2] When adding CNM to existing FRS, the Subsequent CNM Order Charge applies in addition to the Nonrecurring Charge for the initial setup of CNM. (M)

Certain material on this page formerly appeared on Page 8-212.
Certain material previously found on this page can now be found on Page 8-273.

8. ADVANCED COMMUNICATIONS NETWORKS

8.3 FRAME RELAY SERVICE (T)(M)
8.3.5 RATES AND CHARGES
F. 60 Months
7. Optional Features and Functions (Cont'd) (T)

	USOC	NONRECURRING CHARGE	MONTHLY RATE
• Priority UNIT PVC[1], per PVC			
- 56 or 64 kbps	PV7X5	$50.00	$4.50
- 112 or 128 kbps	PV7X5	50.00	5.25
- 224 or 256 kbps	PV7X5	50.00	6.00
- 336 or 384 kbps	PV7X5	50.00	6.75
- 448 or 512 kbps	PV7X5	50.00	7.50
- 672 or 768 kbps	PV7X5	50.00	8.25
- 1.544 Mbps	PV7X5	50.00	9.00
- 44.736 Mbps	PV7X5	50.00	9.00

[1] Priority PVC rates and charges apply in addition to the UNIT PVC rates and charges set forth preceding. (M)

Certain material on this page formerly appeared on Page 8-213.
Certain material previously found on this page can now be found on Page 8-274.

8. ADVANCED COMMUNICATIONS NETWORKS

8.3 FRAME RELAY SERVICE (S-y)
8.3.5 RATES AND CHARGES (Cont'd) (T-y)

(D-y)

(y) Reissued matter filed under Transmittal No. 28, to become effective December 6, 2000.

8. ADVANCED COMMUNICATIONS NETWORKS

Certain material previously found on this page can now be found on Page 8-276.

8. ADVANCED COMMUNICATIONS NETWORKS

8.3 FRAME RELAY SERVICE (T)(M)
8.3.5 RATES AND CHARGES (Cont'd) (T)

G. 72 Months

	USOC	NONRECURRING CHARGE	MONTHLY RATE
1. Access Link, per Access Link			
• 56 or 64 kbps	L7AX6	$450.00	$ 42.30
- Vintage[1]			17.34
- Vintage[2]			36.68
• 1.544 Mbps	L7AX6	450.00	113.85
- Vintage[1]			105.90
2. Stand-Alone Access Link, per Access Link			
• 56 or 64 kbps	NNLX6	450.00	42.30
- Vintage[2]			36.68
• 1.544 Mbps	NNLX6	450.00	113.85

[1] Vintage rate in effect 1/17/94 through 11/13/94.
[2] Vintage rate in effect 11/14/94 through 12/13/96. (M)

Certain material on this page formerly appeared on Page 8-215.
Certain material previously found on this page can now be found on Pages 8-277 and 8-278.

8. ADVANCED COMMUNICATIONS NETWORKS

8.3 FRAME RELAY SERVICE (T)(M)
8.3.5 RATES AND CHARGES
G. 72 Months (Cont'd) (T)

3. User-To-Network Information Transfer (UNIT)

	USOC	NONRECURRING CHARGE	
• 56 or 64 kbps			
- First PVC	NRBF1	$50.00	
- Each additional PVC	NRBF2	20.00	
- Subsequent PVC(s) order charge, per order[1]	NRBFO	75.00	(T)

[1] When appropriate, the "Each additional PVC" nonrecurring charge applies in addition to the "Subsequent PVC order charge". (T) (M)

Certain material on this page formerly appeared on Page 8-215.
Certain material previously found on this page can now be found on Pages 8-279 and 8-280.

8. ADVANCED COMMUNICATIONS NETWORKS

8.3 FRAME RELAY SERVICE (T)(M)

8.3.5 RATES AND CHARGES

G. 72 Months

3. User-To-Network Information Transfer (UNIT) (Cont'd) (T)

	USOC	NONRECURRING CHARGE
• 112 or 128 kbps, 224 or 256 kbps, 336 or 384 kbps, 448 or 512 kbps, and 672 or 768 kbps		
- First PVC	NRBF1	$250.00
- Each additional PVC	NRBF2	20.00
- Subsequent PVC(s) order charge, per order[1]	NRBFO	75.00
• 1.544 Mbps		
- First PVC	NRBF1	50.00
- Each additional PVC	NRBF2	20.00
- Subsequent PVC(s) order charge, per order[1]	NRBFO	75.00

[1] When appropriate, the "Each additional PVC" nonrecurring charge applies in addition to the "Subsequent PVC order charge". (M)

Certain material on this page formerly appeared on Page 8-216.
Certain material previously found on this page can now be found on Pages 8-281 and 8-282.

8. ADVANCED COMMUNICATIONS NETWORKS

8.3 FRAME RELAY SERVICE (S-y)

8.3.5 RATES AND CHARGES

G. 72 Months

3. User-To-Network Information Transfer (UNIT) (Cont'd)

	USOC	NONRECURRING CHARGE	
• 44.736 Mbps			
- First PVC	NRBF1	$250.00	
- Each additional PVC	NRBF2	50.00	
- Subsequent PVC(s) order charge, per order[1]	NRBFO	75.00	(S-y)
• Fault Tolerant Service (Grandfathered), per UNIT			(C-y) (S-y)
- Initial Service Establishment	NRBF4	500.00	
- Subsequent Service Establishment	NRBF5	50.00	
- Activation and Restoral	NRBF6	500.00	

[1] When appropriate, the "Each additional PVC" nonrecurring charge applies in addition to the "Subsequent PVC order charge". (S-y)

(y) Reissued matter filed under Transmittal No. 28, to become effective December 6, 2000.

(Filed under Transmittal 30.)

8. ADVANCED COMMUNICATIONS NETWORKS

Certain material previously found on this page can now be found on Page 8-284.

8. ADVANCED COMMUNICATIONS NETWORKS

8.3 FRAME RELAY SERVICE (T)(M)

8.3.5 RATES AND CHARGES

G. 72 Months

3. User-To-Network Information Transfer (UNIT) (Cont'd) (T)

	USOC	MONTHLY RATE
• 56 or 64 kbps - UNIT, per Port		
- 0 PVCs, used with Fault Tolerant Service	17T96	$ 31.50
- 1 PVC	17TA6	35.35
- 2 PVCs	17TB6	40.08
- 3 PVCs	17TC6	43.01
- 4 PVCs	17TD6	45.95
- 5 PVCs	17TE6	48.86
- 6 PVCs through 14[1], per PVC	17TG6	1.12
Vintage[2]		1.00
- 15 PVCs through 24[3], per PVC	17TH6	0.24
Vintage[2]		0.21
- Each additional PVC over 24[4], per PVC	17TJ6	0.25
Vintage[2]		0.09
Vintage[5]		0.10

[1] For each PVC over 5, up to and including 14, add this rate to the monthly rate for 5 PVCs.
[2] Vintage rate in effect 1/17/94 through 11/13/94.
[3] For each PVC over 14, up to and including 24, add this rate to the total monthly rate for 14 PVCs.
[4] For each PVC over 24 add this rate to the total monthly rate for 24 PVCs.
[5] Vintage rate in effect 11/14/94 through 12/13/96. (M)

Certain material on this page formerly appeared on Page 8-217.
Certain material previously found on this page can now be found on Page 8-285.

8. ADVANCED COMMUNICATIONS NETWORKS

8.3 FRAME RELAY SERVICE (T)(M)

8.3.5 RATES AND CHARGES

G. 72 Months

3. User-To-Network Information Transfer (UNIT) (Cont'd) (T)

	USOC	MONTHLY RATE	
• 112 or 128 kbps - UNIT, per Port			
- 1 PVC	17TA6	$108.00	(T)
Vintage[1]		63.82	(T)
- 2 PVCs	17TB6	110.70	
Vintage[1]		66.97	(T)
- 3 PVCs	17TC6	113.40	
Vintage[1]		70.12	(T)
- 4 PVCs	17TD6	116.10	
Vintage[1]		73.28	(T)
- 5 PVCs	17TE6	118.80	
Vintage[1]		76.42	(T)
- 6 PVCs through 14[2], per PVC	17TG6	1.10	(T)
- 15 PVCs through 24[3], per PVC	17TH6	0.75	
Vintage[1]		0.41	(T)
- Each additional PVC over 24[4], per PVC	17TJ6	0.45	
Vintage[1]		0.17	(T)

[1] Vintage rate in effect 11/14/94 through 12/13/96. (T)

[2] For each PVC over 5, up to and including 14, add this rate to the monthly rate for 5 PVCs. (T)

[3] For each PVC over 14, up to and including 24, add this rate to the total monthly rate for 14 PVCs. (T)

[4] For each PVC over 24 add this rate to the total monthly rate for 24 PVCs.

(M)

Certain material on this page formerly appeared on Page 8-217.
Certain material previously found on this page can now be found on Page 8-286.

8. ADVANCED COMMUNICATIONS NETWORKS

8.3 FRAME RELAY SERVICE (T)(M)

8.3.5 RATES AND CHARGES

G. 72 Months

3. User-To-Network Information Transfer (UNIT) (Cont'd) (T)

	USOC	MONTHLY RATE
• 224 or 256 kbps - UNIT, per Port		
- 1 PVC	17TA6	$144.00
Vintage[1]		86.15
- 2 PVCs	17TB6	149.40
Vintage[1]		92.19
- 3 PVCs	17TC6	154.80
Vintage[1]		98.22
- 4 PVCs	17TD6	160.20
Vintage[1]		104.25
- 5 PVCs	17TE6	165.60
Vintage[1]		110.27
- 6 PVCs through 14[2], per PVC	17TG6	2.10
- 15 PVCs through 24[3], per PVC	17TH6	1.50
Vintage[1]		0.92
- Each additional PVC over 24[4], per PVC	17TJ6	0.45
Vintage[1]		0.34

[1] Vintage rate in effect 11/14/94 through 12/13/96.
[2] For each PVC over 5, up to and including 14, add this rate to the monthly rate for 5 PVCs.
[3] For each PVC over 14, up to and including 24, add this rate to the total monthly rate for 14 PVCs.
[4] For each PVC over 24 add this rate to the total monthly rate for 24 PVCs. (M)

Certain material on this page formerly appeared on Page 8-218.
Certain material previously found on this page can now be found on Page 8-287.

8. ADVANCED COMMUNICATIONS NETWORKS

8.3 FRAME RELAY SERVICE (T)(M)

8.3.5 RATES AND CHARGES

G. 72 Months

3. User-To-Network Information Transfer (UNIT) (Cont'd) (T)

	USOC	MONTHLY RATE	
• 336 or 384 kbps - UNIT, per Port			
- 1 PVC	17TA6	$180.00	(T)
Vintage[1]		108.48	
- 2 PVCs	17TB6	187.90	
Vintage[1]		117.39	
- 3 PVCs	17TC6	195.75	
Vintage[1]		126.30	
- 4 PVCs	17TD6	203.65	
Vintage[1]		135.99	
- 5 PVCs	17TE6	211.50	
Vintage[1]		145.68	
- 6 PVCs through 14[2], per PVC	17TG6	3.15	
- 15 PVCs through 24[3], per PVC	17TH6	2.25	
Vintage[1]		1.37	
- Each additional PVC over 24[4], per PVC	17TJ6	0.45	

[1] Vintage rate in effect 11/14/94 through 12/13/96.
[2] For each PVC over 5, up to and including 14, add this rate to the monthly rate for 5 PVCs.
[3] For each PVC over 14, up to and including 24, add this rate to the total monthly rate for 14 PVCs.
[4] For each PVC over 24 add this rate to the total monthly rate for 24 PVCs. (M)

Certain material on this page formerly appeared on Page 8-218.
Certain material previously found on this page can now be found on Page 8-306.

8. ADVANCED COMMUNICATIONS NETWORKS

Certain material previously found on this page can now be found on Page 8-307.

8. ADVANCED COMMUNICATIONS NETWORKS

8.3 FRAME RELAY SERVICE (T)(M)

8.3.5 RATES AND CHARGES

G. 72 Months

3. User-To-Network Information Transfer (UNIT) (Cont'd) (T)

	USOC	MONTHLY RATE
• 448 or 512 kbps - UNIT, per Port		
- 1 PVC	17TA6	$211.50
Vintage[1]		130.82
- 2 PVCs	17TB6	220.05
Vintage[1]		142.60
- 3 PVCs	17TC6	228.60
Vintage[1]		154.38
- 4 PVCs	17TD6	237.15
Vintage[1]		168.68
- 5 PVCs	17TE6	245.70
Vintage[1]		182.97
- 6 PVCs through 14[2], per PVC	17TG6	3.40
- 15 PVCs through 24[3], per PVC	17TH6	2.25
Vintage[1]		1.83
- Each additional PVC over 24[4], per PVC	17TJ6	0.45

[1] Vintage rate in effect 11/14/94 through 12/13/96.
[2] For each PVC over 5, up to and including 14, add this rate to the monthly rate for 5 PVCs.
[3] For each PVC over 14, up to and including 24, add this rate to the total monthly rate for 14 PVCs.
[4] For each PVC over 24 add this rate to the total monthly rate for 24 PVCs. (M)

Certain material on this page formerly appeared on Page 8-219.
Certain material previously found on this page can now be found on Pages 8-307 and 8-308.

8. ADVANCED COMMUNICATIONS NETWORKS

8.3 FRAME RELAY SERVICE (T)(M)

8.3.5 RATES AND CHARGES

G. 72 Months

3. User-To-Network Information Transfer (UNIT) (Cont'd) (T)

	USOC	MONTHLY RATE	
• 672 or 768 kbps - UNIT, per Port			
- 1 PVC	17TA6	$279.00	(T)
Vintage[1]		176.14	
- 2 PVCs	17TB6	291.60	
Vintage[1]		194.32	
- 3 PVCs	17TC6	304.20	
Vintage[1]		212.49	
- 4 PVCs	17TD6	316.80	
Vintage[1]		233.38	
- 5 PVCs	17TE6	329.40	
Vintage[1]		254.29	
- 6 PVCs through 14[2], per PVC	17TG6	3.60	
- 15 PVCs through 24[3], per PVC	17TH6	2.50	
- Each additional PVC over 24[4], per PVC	17TJ6	0.75	

[1] Vintage rate in effect 11/14/94 through 12/13/96.
[2] For each PVC over 5, up to and including 14, add this rate to the monthly rate for 5 PVCs.
[3] For each PVC over 14, up to and including 24, add this rate to the total monthly rate for 14 PVCs.
[4] For each PVC over 24 add this rate to the total monthly rate for 24 PVCs. (M)

Certain material on this page formerly appeared on Page 8-219.
Certain material previously found on this page can now be found on Page 8-309.

8. ADVANCED COMMUNICATIONS NETWORKS

Certain material previously found on this page can now be found on Page 8-310.

8. ADVANCED COMMUNICATIONS NETWORKS

8.3 FRAME RELAY SERVICE (T)(M)

8.3.5 RATES AND CHARGES

G. 72 Months

3. User-To-Network Information Transfer (UNIT) (Cont'd) (T)

	USOC	MONTHLY RATE
• 1.544 Mbps - UNIT, per Port		
- 0 PVCs, used with Fault Tolerant Service	17T96	$193.50
- 1 PVC	17TA6	216.00
Vintage[1]		123.77
- 2 PVCs	17TB6	249.30
Vintage[1]		173.89
- 3 PVCs	17TC6	282.60
Vintage[1]		224.02
- 4 PVCs	17TD6	315.90
Vintage[1]		273.44
- 5 PVCs	17TE6	349.20
Vintage[1]		322.86
- 6 PVCs through 14[2], per PVC	17TG6	17.10
Vintage[3]		16.62
- 15 PVCs through 24[4], per PVC	17TH6	4.50
- Each additional PVC over 24[5], per PVC	17TJ6	0.45
Vintage[1]		0.23

[1] Vintage rate in effect 11/14/94 through 12/13/96.
[2] For each PVC over 5, up to and including 14, add this rate to the monthly rate for 5 PVCs.
[3] Vintage rate in effect 1/17/94 through 11/13/94.
[4] For each PVC over 14, up to and including 24, add this rate to the total monthly rate for 14 PVCs.
[5] For each PVC over 24 add this rate to the total monthly rate for 24 PVCs. (M)

Certain material on this page formerly appeared on Page 8-220.
Certain material previously found on this page can now be found on Page 8-311.

8. ADVANCED COMMUNICATIONS NETWORKS

8.3 FRAME RELAY SERVICE (T)(M)

8.3.5 RATES AND CHARGES

G. 72 Months

3. User-To-Network Information Transfer (UNIT) (Cont'd) (T)

	USOC	MONTHLY RATE
• 44.736 Mbps - UNIT, per Port		
- 0 PVCs, used with Fault Tolerant Service	17T96	$3,150.00
- 1 PVC	17TU6	3,420.00
- 2 PVCs through 50[1], per PVC	17TV6	27.00
- 51 PVCs through 140[2], per PVC	17TW6	7.20
- 141 PVCs through 240[3], per PVC	17TY6	3.60
- 241 PVCs through 500[4], per PVC	17TZ6	1.80

[1] For each PVC over 1, up to and including 50, add this rate to the monthly rate for 1 PVC.
[2] For each PVC over 50, up to and including 140, add this rate to the total monthly rate for 50 PVCs.
[3] For each PVC over 140, up to and including 240, add this rate to the total monthly rate for 140 PVCs.
[4] For each PVC over 240, up to and including 500, add this rate to the total monthly rate for 240 PVCs. (M)

Certain material on this page formerly appeared on Page 8-221.
Certain material previously found on this page can now be found on Pages 8-312 and 8-313.

8. ADVANCED COMMUNICATIONS NETWORKS

8.3 FRAME RELAY SERVICE (T)(M)
8.3.5 RATES AND CHARGES (T)

G. 72 Months (Cont'd)

4. Network-To-Network Information Transfer (NNIT)

	USOC	NONRECURRING CHARGE
• 56 or 64 kbps		
- First PVC	NRBF1	$ 50.00
- Each additional PVC	NRBF2	20.00
- Subsequent PVC(s) order charge, per order[1]	NRBFO	75.00
• 112 or 128 kbps, 224 or 256 kbps, 336 or 384 kbps, 448 or 512 kbps, and 672 or 768 kbps		
- First PVC	NRBF1	250.00
- Each additional PVC	NRBF2	20.00
- Subsequent PVC(s) order charge, per order[1]	NRBFO	75.00
• 1.544 Mbps		
- First PVC	NRBF1	50.00
- Each additional PVC	NRBF2	20.00
- Subsequent PVC(s) order charge, per order[1]	NRBFO	75.00

[1] When appropriate, the "Each additional PVC" nonrecurring charge applies in addition to the "Subsequent PVC order charge". (M)

Certain material on this page formerly appeared on Page 8-222.
Certain material previously found on this page can now be found on Pages 8-313 and 8-314.

8. ADVANCED COMMUNICATIONS NETWORKS

8.3 FRAME RELAY SERVICE (T)(M)

8.3.5 RATES AND CHARGES

G. 72 Months

4. Network-To-Network Information Transfer (NNIT) (Cont'd) (T)

	USOC	NONRECURRING CHARGE
• 44.736 Mbps		
- First PVC	NRBF1	$250.00
- Each additional PVC	NRBF2	50.00
- Subsequent PVC(s) order charge, per order[1]	NRBFO	75.00

[1] When appropriate, the "Each additional PVC" nonrecurring charge applies in addition to the "Subsequent PVC order charge". (M)

Certain material on this page formerly appeared on Page 8-222.1.
Certain material previously found on this page can now be found on Page 8-315.

8. ADVANCED COMMUNICATIONS NETWORKS

8.3 FRAME RELAY SERVICE (T)(M)

8.3.5 RATES AND CHARGES

G. 72 Months

4. Network-To-Network Information Transfer (NNIT) (Cont'd) (T)

	USOC	MONTHLY RATE
• 56 or 64 kbps - NNIT, per Port		
- 1 PVC	17TA6	$34.20
Vintage[1]		34.19
- 2 PVCs	17TB6	38.10
Vintage[1]		35.85
- 3 PVCs	17TC6	42.05
Vintage[1]		37.51
- 4 PVCs	17TD6	45.95
Vintage[1]		39.18
- 5 PVCs	17TE6	49.85
Vintage[1]		40.83
- 6 PVCs through 14[2], per PVC	17TG6	0.45
- 15 PVCs through 24[3], per PVC	17TH6	0.25
Vintage[1]		0.14
- Each additional PVC over 24[4], per PVC	17TJ6	0.25
Vintage[1]		0.06

[1] Vintage rate in effect 11/14/94 through 12/13/96.
[2] For each PVC over 5, up to and including 14, add this rate to the monthly rate for 5 PVCs.
[3] For each PVC over 14, up to and including 24, add this rate to the total monthly rate for 14 PVCs.
[4] For each PVC over 24 add this rate to the total monthly rate for 24 PVCs. (M)

Certain material on this page formerly appeared on Page 8-223.
Certain material previously found on this page can now be found on Pages 8-340 and 8-341.

8. ADVANCED COMMUNICATIONS NETWORKS

8.3 FRAME RELAY SERVICE (T)(M)

8.3.5 RATES AND CHARGES

G. 72 Months

4. Network-To-Network Information Transfer (NNIT) (Cont'd) (T)

	USOC	MONTHLY RATE	
• 112 or 128 kbps - NNIT, per Port			
- 1 PVC	17TA6	$76.50	(T)
Vintage[1]		44.77	
- 2 PVCs	17TB6	79.20	
Vintage[1]		47.92	
- 3 PVCs	17TC6	81.90	
Vintage[1]		51.08	
- 4 PVCs	17TD6	84.60	
Vintage[1]		54.23	
- 5 PVCs	17TE6	87.30	
Vintage[1]		57.37	
- 6 PVCs through 14[2], per PVC	17TG6	1.10	
- 15 PVCs through 24[3], per PVC	17TH6	0.75	
Vintage[1]		0.30	
- Each additional PVC over 24[4], per PVC	17TJ6	0.45	
Vintage[1]		0.11	

[1] Vintage rate in effect 11/14/94 through 12/13/96.
[2] For each PVC over 5, up to and including 14, add this rate to the monthly rate for 5 PVCs.
[3] For each PVC over 14, up to and including 24, add this rate to the total monthly rate for 14 PVCs.
[4] For each PVC over 24 add this rate to the total monthly rate for 24 PVCs. (M)

Certain material on this page formerly appeared on Page 8-223.
Certain material previously found on this page can now be found on Page 8-342.

8. ADVANCED COMMUNICATIONS NETWORKS

8.3 FRAME RELAY SERVICE (T)(M)

8.3.5 RATES AND CHARGES

G. 72 Months

4. Network-To-Network Information Transfer (NNIT) (Cont'd) (T)

	USOC	MONTHLY RATE
• 224 or 256 kbps - NNIT, per Port		
- 1 PVC	17TA6	$112.50
Vintage[1]		67.10
- 2 PVCs	17TB6	117.90
Vintage[1]		73.15
- 3 PVCs	17TC6	123.30
Vintage[1]		79.17
- 4 PVCs	17TD6	128.70
Vintage[1]		85.20
- 5 PVCs	17TE6	134.10
Vintage[1]		91.22
- 6 PVCs through 14[2], per PVC	17TG6	2.10
- 15 PVCs through 24[3], per PVC	17TH6	1.50
Vintage[1]		0.55
- Each additional PVC over 24[4], per PVC	17TJ6	0.45
Vintage[1]		0.21

[1] Vintage rate in effect 11/14/94 through 12/13/96.
[2] For each PVC over 5, up to and including 14, add this rate to the monthly rate for 5 PVCs.
[3] For each PVC over 14, up to and including 24, add this rate to the total monthly rate for 14 PVCs.
[4] For each PVC over 24 add this rate to the total monthly rate for 24 PVCs. (M)

Certain material on this page formerly appeared on Page 8-224.
Certain material previously found on this page can now be found on Pages 8-343 and 8-344.

8. ADVANCED COMMUNICATIONS NETWORKS

8.3 FRAME RELAY SERVICE (T)(M)

8.3.5 RATES AND CHARGES

G. 72 Months

4. Network-To-Network Information Transfer (NNIT) (Cont'd) (T)

	USOC	MONTHLY RATE	
• 336 or 384 kbps - NNIT, per Port			
- 1 PVC	17TA6	$153.00	(T)
Vintage[1]		89.43	
- 2 PVCs	17TB6	160.90	
Vintage[1]		98.34	
- 3 PVCs	17TC6	168.75	
Vintage[1]		107.24	
- 4 PVCs	17TD6	176.65	
Vintage[1]		116.15	
- 5 PVCs	17TE6	184.50	
Vintage[1]		125.04	
- 6 PVCs through 14[2], per PVC	17TG6	3.15	
- 15 PVCs through 24[3], per PVC	17TH6	2.25	
Vintage[1]		0.83	
- Each additional PVC over 24[4], per PVC	17TJ6	0.45	
Vintage[1]		0.30	

[1] Vintage rate in effect 11/14/94 through 12/13/96.
[2] For each PVC over 5, up to and including 14, add this rate to the monthly rate for 5 PVCs.
[3] For each PVC over 14, up to and including 24, add this rate to the total monthly rate for 14 PVCs.
[4] For each PVC over 24 add this rate to the total monthly rate for 24 PVCs. (M)

Certain material on this page formerly appeared on Page 8-224.
Certain material previously found on this page can now be found on Pages 8-345, 8-346 and 8-347.

8. ADVANCED COMMUNICATIONS NETWORKS

8.3 FRAME RELAY SERVICE (T)(M)

8.3.5 RATES AND CHARGES

G. 72 Months

4. Network-To-Network Information Transfer (NNIT) (Cont'd) (T)

	USOC	MONTHLY RATE
• 448 or 512 kbps - NNIT, per Port		
- 1 PVC	17TA6	$184.50
Vintage[1]		111.76
- 2 PVCs	17TB6	193.05
Vintage[1]		123.55
- 3 PVCs	17TC6	201.60
Vintage[1]		135.33
- 4 PVCs	17TD6	210.15
Vintage[1]		147.11
- 5 PVCs	17TE6	218.70
Vintage[1]		158.89
- 6 PVCs through 14[2], per PVC	17TG6	3.40
- 15 PVCs through 24[3], per PVC	17TH6	2.25
Vintage[1]		1.10
- Each additional PVC over 24[4], per PVC	17TJ6	0.45
Vintage[1]		0.41

[1] Vintage rate in effect 11/14/94 through 12/13/96.
[2] For each PVC over 5, up to and including 14, add this rate to the monthly rate for 5 PVCs.
[3] For each PVC over 14, up to and including 24, add this rate to the total monthly rate for 14 PVCs.
[4] For each PVC over 24 add this rate to the total monthly rate for 24 PVCs. (M)

Certain material on this page formerly appeared on Page 8-225.
Certain material previously found on this page can now be found on Pages 8-348, 8-349 and 8-350.

8. ADVANCED COMMUNICATIONS NETWORKS

8.3 FRAME RELAY SERVICE (T)(M)

8.3.5 RATES AND CHARGES

G. 72 Months

4. Network-To-Network Information Transfer (NNIT) (Cont'd) (T)

	USOC	MONTHLY RATE	
• 672 or 768 kbps - NNIT, per Port			
- 1 PVC	17TA6	$252.00	(T)
Vintage[1]		157.09	
- 2 PVCs	17TB6	263.70	
Vintage[1]		175.27	
- 3 PVCs	17TC6	275.40	
Vintage[1]		193.45	
- 4 PVCs	17TD6	287.10	
Vintage[1]		211.62	
- 5 PVCs	17TE6	298.80	
Vintage[1]		229.80	
- 6 PVCs through 14[2], per PVC	17TG6	3.40	
- 15 PVCs through 24[3], per PVC	17TH6	2.25	
- Each additional PVC over 24[4], per PVC	17TJ6	0.45	

[1] Vintage rate in effect 11/14/94 through 12/13/96.
[2] For each PVC over 5, up to and including 14, add this rate to the monthly rate for 5 PVCs.
[3] For each PVC over 14, up to and including 24, add this rate to the total monthly rate for 14 PVCs.
[4] For each PVC over 24 add this rate to the total monthly rate for 24 PVCs. (M)

Certain material on this page formerly appeared on Page 8-225.
Certain material previously found on this page can now be found on Pages 8-351 and 8-352.

8. ADVANCED COMMUNICATIONS NETWORKS

8.3 FRAME RELAY SERVICE (T)(M)

8.3.5 RATES AND CHARGES

G. 72 Months

4. Network-To-Network Information Transfer (NNIT) (Cont'd) (T)

	USOC	MONTHLY RATE
• 1.544 Mbps - NNIT, per Port		
- 1 PVC	17TA6	$189.00
Vintage[1]		104.72
- 2 PVCs	17TB6	222.30
Vintage[1]		154.14
- 3 PVCs	17TC6	255.60
Vintage[1]		203.57
- 4 PVCs	17TD6	288.90
Vintage[1]		252.98
- 5 PVCs	17TE6	322.20
Vintage[1]		302.41
- 6 PVCs through 14[2], per PVC	17TG6	17.10
- 15 PVCs through 24[3], per PVC	17TH6	4.50
Vintage[1]		4.06
- Each additional PVC over 24[4], per PVC	17TJ6	0.45
Vintage[1]		0.14

[1] Vintage rate in effect 11/14/94 through 12/13/96.

[2] For each PVC over 5, up to and including 14, add this rate to the monthly rate for 5 PVCs.

[3] For each PVC over 14, up to and including 24, add this rate to the total monthly rate for 14 PVCs.

[4] For each PVC over 24 add this rate to the total monthly rate for 24 PVCs. (M)

Certain material on this page formerly appeared on Page 8-226.
Certain material previously found on this page can now be found on Page 8-353.

8. ADVANCED COMMUNICATIONS NETWORKS

8.3 FRAME RELAY SERVICE (T)(M)

8.3.5 RATES AND CHARGES

G. 72 Months

4. Network-To-Network Information Transfer (NNIT) (Cont'd) (T)

	USOC	MONTHLY RATE
• 44.736 Mbps - NNIT, per Port		
- 1 PVC	17TU6	$3,420.00
- 2 PVCs through 50[1], per PVC	17TV6	27.00
- 51 PVCs through 140[2], per PVC	17TW6	7.20
- 141 PVCs through 240[3], per PVC	17TY6	3.60
- 241 PVCs through 500[4], per PVC	17TZ6	1.80

[1] For each PVC over 1, up to and including 50, add this rate to the monthly rate for 1 PVC.
[2] For each PVC over 50, up to and including 140, add this rate to the total monthly rate for 50 PVCs.
[3] For each PVC over 140, up to and including 240, add this rate to the total monthly rate for 140 PVCs.
[4] For each PVC over 240, up to and including 500, add this rate to the total monthly rate for 240 PVCs. (M)

Certain material on this page formerly appeared on Page 8-226.1.
Certain material previously found on this page can now be found on Pages 8-354 and 8-355.

8. ADVANCED COMMUNICATIONS NETWORKS

8.3 FRAME RELAY SERVICE (T)(M)
8.3.5 RATES AND CHARGES
G. 72 Months (Cont'd) (T)

	USOC	NONRECURRING CHARGE	MONTHLY RATE	
5. Central Office Connecting Channel				
• Per connection between a Multiplexer and FRS Port or between a Company facility port and an FRS Port				
- For speeds up to 1.544 Mbps	CU8AR	$25.00	$ 0.59	
- For speeds up to 44.736 Mbps	CU8AR	50.00	9.00	
6. Transport Channels	N/A	[1]	[1]	(T)
7. Optional Features and Functions				
• Customer Network Management (CNM)				
- Per workstation registered address initial setup	NM6X6	15.00	60.30	
- Subsequent CNM order charge, per workstation registered address change or addition of CNM to existing FRS[2]	NR9FM	38.00	–	

[1] See Section 7 for Transport Channel rates and regulations.

[2] When adding CNM to existing FRS, the Subsequent CNM Order Charge applies in addition to the Nonrecurring Charge for the initial setup of CNM. (M)

Certain material on this page formerly appeared on Page 8-227.
Certain material previously found on this page can now be found on Pages 8-355, 8-356, 8-357 and 8-358.

8. ADVANCED COMMUNICATIONS NETWORKS

8.3 FRAME RELAY SERVICE (S-y)

8.3.5 RATES AND CHARGES

G. 72 Months

7. Optional Features and Functions (Cont'd)

	USOC	NONRECURRING CHARGE	MONTHLY RATE	
• Priority UNIT PVC[1] (Grandfathered), per PVC				(S-y) (C-y)
- 56 or 64 kbps	PV7X6	$50.00	$4.50	(S-y)
- 112 or 128 kbps	PV7X6	50.00	5.25	
- 224 or 256 kbps	PV7X6	50.00	6.00	
- 336 or 384 kbps	PV7X6	50.00	6.75	
- 448 or 512 kbps	PV7X6	50.00	7.50	
- 672 or 768 kbps	PV7X6	50.00	8.25	
- 1.544 Mbps	PV7X6	50.00	9.00	
- 44.736 Mbps	PV7X6	50.00	9.00	

[1] Priority PVC rates and charges apply in addition to the UNIT PVC rates and charges set forth preceding. (S-y)

(y) Reissued matter filed under Transmittal No. 28, to become effective December 6, 2000.

8. ADVANCED COMMUNICATIONS NETWORKS

8.3 FRAME RELAY SERVICE (T-y)
8.3.5 RATES AND CHARGES (Cont'd) (T-y)

(D-y)

(y) Reissued matter filed under Transmittal No. 28, to become effective December 6, 2000.

8. ADVANCED COMMUNICATIONS NETWORKS

8.3 FRAME RELAY SERVICE (T)(M)
8.3.5 RATES AND CHARGES (Cont'd) (T)

H. 84 Months

	USOC	NONRECURRING CHARGE	MONTHLY RATE
1. Access Link, per Access Link			
• 56 or 64 kbps	L7AX7	$450.00	$ 42.30
- Vintage[1]			36.68
- Vintage[2]			17.34
• 1.544 Mbps	L7AX7	450.00	113.85
- Vintage[2]			105.90
2. Stand-Alone Access Link per Access Link			
• 56 or 64 kbps	NNLX7	450.00	42.30
Vintage[1]			36.68
• 1.544 Mbps	NNLX7	450.00	113.85

[1] Vintage rate in effect 11/14/94 through 12/13/96.

[2] Vintage rate in effect 1/17/94 through 11/13/94. (M)

Certain material on this page formerly appeared on Page 8-230.
Certain material previously found on this page can now be found on Page 8-364.

8. ADVANCED COMMUNICATIONS NETWORKS

8.3 FRAME RELAY SERVICE (T)(M)
8.3.5 RATES AND CHARGES
H. 84 Months (Cont'd) (T)

3. User-To-Network Information Transfer (UNIT)

	USOC	NONRECURRING CHARGE	
• 56 or 64 kbps			
- First PVC	NRBF1	$50.00	
- Each additional PVC	NRBF2	20.00	
- Subsequent PVC(s) order charge, per order[1]	NRBFO	75.00	(T)

[1] When appropriate, the "Each additional PVC" nonrecurring charge applies in addition to the "Subsequent PVC order charge". (T) (M)

Certain material on this page formerly appeared on Page 8-230.
Certain material previously found on this page can now be found on Pages 8-365 and 8-366.

8. ADVANCED COMMUNICATIONS NETWORKS

8.3 FRAME RELAY SERVICE (T)(M)

8.3.5 RATES AND CHARGES

H. 84 Months

3. User-To-Network Information Transfer (UNIT) (Cont'd) (T)

	USOC	NONRECURRING CHARGE
• 112 or 128 kbps, 224 or 256 kbps, 336 or 384 kbps, 448 or 512 kbps, and 672 or 768 kbps		
- First PVC	NRBF1	$250.00
- Each additional PVC	NRBF2	20.00
- Subsequent PVC(s) order charge, per order[1]	NRBFO	75.00
• 1.544 Mbps		
- First PVC	NRBF1	50.00
- Each additional PVC	NRBF2	20.00
- Subsequent PVC(s) order charge, per order[1]	NRBFO	75.00

[1] When appropriate, the "Each additional PVC" nonrecurring charge applies in addition to the "Subsequent PVC order charge". (M)

Certain material on this page formerly appeared on Page 8-231.
Certain material previously found on this page can now be found on Pages 8-366, 8-367, 8-368 and 8-369.

8. ADVANCED COMMUNICATIONS NETWORKS

8.3 FRAME RELAY SERVICE (S-y)

8.3.5 RATES AND CHARGES

H. 84 Months

3. User-To-Network Information Transfer (UNIT) (Cont'd)

	USOC	NONRECURRING CHARGE	
• 44.736 Mbps			
- First PVC	NRBF1	$250.00	
- Each additional PVC	NRBF2	50.00	
- Subsequent PVC(s) order charge, per order[1]	NRBFO	75.00	(S-y)
• Fault Tolerant Service (Grandfathered), per UNIT			(C-y) (S-y)
- Initial Service Establishment	NRBF4	500.00	
- Subsequent Service Establishment	NRBF5	50.00	
- Activation and Restoral	NRBF6	500.00	

[1] When appropriate, the "Each additional PVC" nonrecurring charge applies in addition to the "Subsequent PVC order charge". (S-y)

(y) Reissued matter filed under Transmittal No. 28, to become effective December 6, 2000.

8. ADVANCED COMMUNICATIONS NETWORKS

8.3 FRAME RELAY SERVICE (T)(M)

8.3.5 RATES AND CHARGES

H. 84 Months

3. User-To-Network Information Transfer (UNIT) (Cont'd) (T)

	USOC	MONTHLY RATE
• 56 or 64 kbps - UNIT, per Port		
- 0 PVCs, used with Fault Tolerant Service	17T97	$ 31.50
- 1 PVC	17TA7	35.35
- 2 PVCs	17TB7	40.08
- 3 PVCs	17TC7	43.01
- 4 PVCs	17TD7	45.95
- 5 PVCs	17TE7	48.86
- 6 PVCs through 14[1], per PVC	17TG7	1.12
Vintage[2]		1.00
- 15 PVCs through 24[3], per PVC	17TH7	0.24
Vintage[2]		0.21
- Each additional PVC over 24[4], per PVC	17TJ7	0.25
Vintage[2]		0.09
Vintage[5]		0.10

[1] For each PVC over 5, up to and including 14, add this rate to the monthly rate for 5 PVCs.
[2] Vintage rate in effect 1/17/94 through 11/13/94.
[3] For each PVC over 14, up to and including 24, add this rate to the total monthly rate for 14 PVCs.
[4] For each PVC over 24 add this rate to the total monthly rate for 24 PVCs.
[5] Vintage rate in effect 11/14/94 through 12/13/96. (M)

Certain material on this page formerly appeared on Page 8-232.
Certain material previously found on this page can now be found on Pages 8-373 and 8-374.

8. ADVANCED COMMUNICATIONS NETWORKS

8.3 FRAME RELAY SERVICE (T)(M)

8.3.5 RATES AND CHARGES

H. 84 Months

3. User-To-Network Information Transfer (UNIT) (Cont'd) (T)

	USOC	MONTHLY RATE	
• 112 or 128 kbps - UNIT, per Port			
- 1 PVC	17TA7	$108.00	(T)
Vintage[1]		63.82	(T)
- 2 PVCs	17TB7	110.70	
Vintage[1]		66.97	(T)
- 3 PVCs	17TC7	113.40	
Vintage[1]		70.12	(T)
- 4 PVCs	17TD7	116.10	
Vintage[1]		73.28	(T)
- 5 PVCs	17TE7	118.80	
Vintage[1]		76.42	(T)
- 6 PVCs through 14[2], per PVC	17TG7	1.10	(T)
- 15 PVCs through 24[3], per PVC	17TH7	0.75	
Vintage[1]		0.41	(T)
- Each additional PVC over 24[4], per PVC	17TJ7	0.45	
Vintage[1]		0.17	(T)

[1] Vintage rate in effect 11/14/94 through 12/13/96. (T)

[2] For each PVC over 5, up to and including 14, add this rate to the monthly rate for 5 PVCs. (T)

[3] For each PVC over 14, up to and including 24, add this rate to the total monthly rate for 14 PVCs.

[4] For each PVC over 24 add this rate to the total monthly rate for 24 PVCs. (M)

Certain material on this page formerly appeared on Page 8-232.
Certain material previously found on this page can now be found on Pages 8-375 and 8-376.

8. ADVANCED COMMUNICATIONS NETWORKS

8.3 FRAME RELAY SERVICE (T)(M)

8.3.5 RATES AND CHARGES

H. 84 Months

3. User-To-Network Information Transfer (UNIT) (Cont'd) (T)

	USOC	MONTHLY RATE
• 224 or 256 kbps - UNIT, per Port		
- 1 PVC	17TA7	$144.00
Vintage[1]		86.15
- 2 PVCs	17TB7	149.40
Vintage[1]		92.19
- 3 PVCs	17TC7	154.80
Vintage[1]		98.22
- 4 PVCs	17TD7	160.20
Vintage[1]		104.25
- 5 PVCs	17TE7	165.60
Vintage[1]		110.27
- 6 PVCs through 14[2], per PVC	17TG7	2.10
- 15 PVCs through 24[3], per PVC	17TH7	1.50
Vintage[1]		0.92
- Each additional PVC over 24[4], per PVC	17TJ7	0.45
Vintage[1]		0.34

[1] Vintage rate in effect 11/14/94 through 12/13/96.
[2] For each PVC over 5, up to and including 14, add this rate to the monthly rate for 5 PVCs.
[3] For each PVC over 14, up to and including 24, add this rate to the total monthly rate for 14 PVCs.
[4] For each PVC over 24 add this rate to the total monthly rate for 24 PVCs. (M)

Certain material on this page formerly appeared on Page 8-233.
Certain material previously found on this page can now be found on Pages 8-377 and 8-378.

8. ADVANCED COMMUNICATIONS NETWORKS

8.3 FRAME RELAY SERVICE (T)(M)

8.3.5 RATES AND CHARGES

H. 84 Months

3. User-To-Network Information Transfer (UNIT) (Cont'd) (T)

	USOC	MONTHLY RATE	
• 336 or 384 kbps - UNIT, per Port			
- 1 PVC	17TA7	$180.00	(T)
Vintage[1]		108.48	
- 2 PVCs	17TB7	187.90	
Vintage[1]		117.39	
- 3 PVCs	17TC7	195.75	
Vintage[1]		126.30	
- 4 PVCs	17TD7	203.65	
Vintage[1]		135.99	
- 5 PVCs	17TE7	211.50	
Vintage[1]		145.68	
- 6 PVCs through 14[2], per PVC	17TG7	3.15	
- 15 PVCs through 24[3], per PVC	17TH7	2.25	
Vintage[1]		1.37	
- Each additional PVC over 24[4], per PVC	17TJ7	0.45	

[1] Vintage rate in effect 11/14/94 through 12/13/96.
[2] For each PVC over 5, up to and including 14, add this rate to the monthly rate for 5 PVCs.
[3] For each PVC over 14, up to and including 24, add this rate to the total monthly rate for 14 PVCs.
[4] For each PVC over 24 add this rate to the total monthly rate for 24 PVCs. (M)

Certain material on this page formerly appeared on Page 8-233.
Certain material previously found on this page can now be found on Pages 8-378, 8-379, 8-380 and 8-381.

8. ADVANCED COMMUNICATIONS NETWORKS

8.3 FRAME RELAY SERVICE (T)(M)

8.3.5 RATES AND CHARGES

H. 84 Months

3. User-To-Network Information Transfer (UNIT) (Cont'd) (T)

	USOC	MONTHLY RATE
• 448 or 512 kbps - UNIT, per Port		
- 1 PVC	17TA7	$211.50
Vintage[1]		130.82
- 2 PVCs	17TB7	220.05
Vintage[1]		142.60
- 3 PVCs	17TC7	228.60
Vintage[1]		154.38
- 4 PVCs	17TD7	237.15
Vintage[1]		168.68
- 5 PVCs	17TE7	245.70
Vintage[1]		182.97
- 6 PVCs through 14[2], per PVC	17TG7	3.40
- 15 PVCs through 24[3], per PVC	17TH7	2.25
Vintage[1]		1.83
- Each additional PVC over 24[4], per PVC	17TJ7	0.45

[1] Vintage rate in effect 11/14/94 through 12/13/96.
[2] For each PVC over 5, up to and including 14, add this rate to the monthly rate for 5 PVCs.
[3] For each PVC over 14, up to and including 24, add this rate to the total monthly rate for 14 PVCs.
[4] For each PVC over 24 add this rate to the total monthly rate for 24 PVCs. (M)

Certain material on this page formerly appeared on Page 8-234.
Certain material previously found on this page can now be found on Pages 8-382, 8-383 and 8-384.

8. ADVANCED COMMUNICATIONS NETWORKS

8.3 FRAME RELAY SERVICE (T)(M)

8.3.5 RATES AND CHARGES

H. 84 Months

3. User-To-Network Information Transfer (UNIT) (Cont'd) (T)

	USOC	MONTHLY RATE	
• 672 or 768 kbps - UNIT, per Port			
- 1 PVC	17TA7	$279.00	(T)
Vintage[1]		176.14	
- 2 PVCs	17TB7	291.60	
Vintage[1]		194.32	
- 3 PVCs	17TC7	304.20	
Vintage[1]		212.49	
- 4 PVCs	17TD7	316.80	
Vintage[1]		233.38	
- 5 PVCs	17TE7	329.40	
Vintage[1]		254.29	
- 6 PVCs through 14[2], per PVC	17TG7	3.60	
- 15 PVCs through 24[3], per PVC	17TH7	2.50	
- Each additional PVC over 24[4], per PVC	17TJ7	0.75	

[1] Vintage rate in effect 11/14/94 through 12/13/96.
[2] For each PVC over 5, up to and including 14, add this rate to the monthly rate for 5 PVCs.
[3] For each PVC over 14, up to and including 24, add this rate to the total monthly rate for 14 PVCs.
[4] For each PVC over 24 add this rate to the total monthly rate for 24 PVCs. (M)

Certain material on this page formerly appeared on Page 8-234.
Certain material previously found on this page can now be found on Pages 8-385 and 8-386.

8. ADVANCED COMMUNICATIONS NETWORKS

8.3 FRAME RELAY SERVICE (T)(M)

8.3.5 RATES AND CHARGES

H. 84 Months

3. User-To-Network Information Transfer (UNIT) (Cont'd) (T)

	USOC	MONTHLY RATE
• 1.544 Mbps - UNIT, per Port		
- 0 PVCs, used with Fault Tolerant Service	17T97	$193.50
- 1 PVC	17TA7	216.00
Vintage[1]		123.77
- 2 PVCs	17TB7	249.30
Vintage[1]		173.89
- 3 PVCs	17TC7	282.60
Vintage[1]		224.02
- 4 PVCs	17TD7	315.90
Vintage[1]		273.44
- 5 PVCs	17TE7	349.20
Vintage[1]		322.86
- 6 PVCs through 14[2], per PVC	17TG7	17.10
Vintage[3]		16.62
- 15 PVCs through 24[4], per PVC	17TH7	4.50
- Each additional PVC over 24[5], per PVC	17TJ7	0.45
Vintage[1]		0.23

[1] Vintage rate in effect 11/14/94 through 12/13/96.
[2] For each PVC over 5, up to and including 14, add this rate to the monthly rate for 5 PVCs.
[3] Vintage rate in effect 1/17/94 through 11/13/94.
[4] For each PVC over 14, up to and including 24, add this rate to the total monthly rate for 14 PVCs.
[5] For each PVC over 24 add this rate to the total monthly rate for 24 PVCs. (M)

Certain material on this page formerly appeared on Page 8-235.
Certain material previously found on this page can now be found on Page 8-387.

8. ADVANCED COMMUNICATIONS NETWORKS

8.3 FRAME RELAY SERVICE (T)(M)

8.3.5 RATES AND CHARGES

H. 84 Months

3. User-To-Network Information Transfer (UNIT) (Cont'd) (T)

	USOC	MONTHLY RATE
• 44.736 Mbps - UNIT, per Port		
- 0 PVCs, used with Fault Tolerant Service	17T97	$3,150.00
- 1 PVC	17TU7	3,420.00
- 2 PVCs through 50[1], per PVC	17TV7	27.00
- 51 PVCs through 140[2], per PVC	17TW7	7.20
- 141 PVCs through 240[3], per PVC	17TY7	3.60
- 241 PVCs through 500[4], per PVC	17TZ7	1.80

[1] For each PVC over 1, up to and including 50, add this rate to the monthly rate for 1 PVC.
[2] For each PVC over 50, up to and including 140, add this rate to the total monthly rate for 50 PVCs.
[3] For each PVC over 140, up to and including 240, add this rate to the total monthly rate for 140 PVCs.
[4] For each PVC over 240, up to and including 500, add this rate to the total monthly rate for 240 PVCs. (M)

Certain material on this page formerly appeared on Page 8-236.
Certain material previously found on this page can now be found on Pages 8-388 and 8-389.

8. ADVANCED COMMUNICATIONS NETWORKS

8.3 FRAME RELAY SERVICE (T)(M)
8.3.5 RATES AND CHARGES (T)

H. 84 Months (Cont'd)

4. Network-To-Network Information Transfer (NNIT)

	USOC	NONRECURRING CHARGE
• 56 or 64 kbps		
- First PVC	NRBF1	$50.00
- Each additional PVC	NRBF2	20.00
- Subsequent PVC(s) order charge, per order[1]	NRBFO	75.00
• 112 or 128 kbps, 224 or 256 kbps, 336 or 384 kbps, 448 or 512 kbps, and 672 or 768 kbps		
- First PVC	NRBF1	250.00
- Each additional PVC	NRBF2	20.00
- Subsequent PVC(s) order charge, per order[1]	NRBFO	75.00
• 1.544 Mbps		
- First PVC	NRBF1	50.00
- Each additional PVC	NRBF2	20.00
- Subsequent PVC(s) order charge, per order[1]	NRBFO	75.00

[1] When appropriate, the "Each additional PVC" nonrecurring charge applies in addition to the "Subsequent PVC order charge". (M)

Certain material on this page formerly appeared on Page 8-237.
Certain material previously found on this page can now be found on Pages 8-389, 8-390, 8-391 and 8-392.

8. ADVANCED COMMUNICATIONS NETWORKS

8.3 FRAME RELAY SERVICE (T)(M)

8.3.5 RATES AND CHARGES

H. 84 Months

4. Network-To-Network Information Transfer (NNIT) (Cont'd) (T)

	USOC	NONRECURRING CHARGE
• 44.736 Mbps		
- First PVC	NRBF1	$250.00
- Each additional PVC	NRBF2	50.00
- Subsequent PVC(s) order charge, per order[1]	NRBFO	75.00

[1] When appropriate, the "Each additional PVC" nonrecurring charge applies in addition to the "Subsequent PVC order charge". (M)

Certain material on this page formerly appeared on Page 8-237.1.
Certain material previously found on this page can now be found on Pages 8-393, 8-394, and 8-395.

8. ADVANCED COMMUNICATIONS NETWORKS

8.3 FRAME RELAY SERVICE (T)(M)

8.3.5 RATES AND CHARGES

H. 84 Months

4. Network-To-Network Information Transfer (NNIT) (Cont'd) (T)

	USOC	MONTHLY RATE
• 56 or 64 kbps - NNIT, per Port		
- 1 PVC	17TA7	$34.20
Vintage[1]		34.19
- 2 PVCs	17TB7	38.10
Vintage[1]		35.85
- 3 PVCs	17TC7	42.05
Vintage[1]		37.51
- 4 PVCs	17TD7	45.95
Vintage[1]		39.18
- 5 PVCs	17TE7	49.85
Vintage[1]		40.83
- 6 PVCs through 14[2], per PVC	17TG7	0.45
- 15 PVCs through 24[3], per PVC	17TH7	0.25
Vintage[1]		0.14
- Each additional PVC over 24[4], per PVC	17TJ7	0.25
Vintage[1]		0.06

[1] Vintage rate in effect 11/14/94 through 12/13/96.
[2] For each PVC over 5, up to and including 14, add this rate to the monthly rate for 5 PVCs.
[3] For each PVC over 14, up to and including 24, add this rate to the total monthly rate for 14 PVCs.
[4] For each PVC over 24 add this rate to the total monthly rate for 24 PVCs. (M)

Certain material on this page formerly appeared on Page 8-238.
Certain material previously found on this page can now be found on Pages 8-396 and 8-397.

8. ADVANCED COMMUNICATIONS NETWORKS

8.3 FRAME RELAY SERVICE (T)(M)

8.3.5 RATES AND CHARGES

H. 84 Months

4. Network-To-Network Information Transfer (NNIT) (Cont'd) (T)

	USOC	MONTHLY RATE	
• 112 or 128 kbps - NNIT, per Port			
- 1 PVC	17TA7	$76.50	(T)
Vintage[1]		44.77	
- 2 PVCs	17TB7	79.20	
Vintage[1]		47.92	
- 3 PVCs	17TC7	81.90	
Vintage[1]		51.08	
- 4 PVCs	17TD7	84.60	
Vintage[1]		54.23	
- 5 PVCs	17TE7	87.30	
Vintage[1]		57.37	
- 6 PVCs through 14[2], per PVC	17TG7	1.10	
- 15 PVCs through 24[3], per PVC	17TH7	0.75	
Vintage[1]		0.30	
- Each additional PVC over 24[4], per PVC	17TJ7	0.45	
Vintage[1]		0.11	

[1] Vintage rate in effect 11/14/94 through 12/13/96.
[2] For each PVC over 5, up to and including 14, add this rate to the monthly rate for 5 PVCs.
[3] For each PVC over 14, up to and including 24, add this rate to the total monthly rate for 14 PVCs.
[4] For each PVC over 24 add this rate to the total monthly rate for 24 PVCs. (M)

Certain material on this page formerly appeared on Page 8-238.
Certain material previously found on this page can now be found on Page 8-398.

8. ADVANCED COMMUNICATIONS NETWORKS

8.3 FRAME RELAY SERVICE (T)(M)

8.3.5 RATES AND CHARGES

H. 84 Months

4. Network-To-Network Information Transfer (NNIT) (Cont'd) (T)

	USOC	MONTHLY RATE
• 224 or 256 kbps - NNIT, per Port		
- 1 PVC	17TA7	$112.50
Vintage[1]		67.10
- 2 PVCs	17TB7	117.90
Vintage[1]		73.15
- 3 PVCs	17TC7	123.30
Vintage[1]		79.17
- 4 PVCs	17TD7	128.70
Vintage[1]		85.20
- 5 PVCs	17TE7	134.10
Vintage[1]		91.22
- 6 PVCs through 14[2], per PVC	17TG7	2.10
- 15 PVCs through 24[3], per PVC	17TH7	1.50
Vintage[1]		0.55
- Each additional PVC over 24[4], per PVC	17TJ7	0.45
Vintage[1]		0.21

[1] Vintage rate in effect 11/14/94 through 12/13/96.
[2] For each PVC over 5, up to and including 14, add this rate to the monthly rate for 5 PVCs.
[3] For each PVC over 14, up to and including 24, add this rate to the total monthly rate for 14 PVCs.
[4] For each PVC over 24 add this rate to the total monthly rate for 24 PVCs. (M)

Certain material on this page formerly appeared on Page 8-239.
Certain material previously found on this page can now be found on Pages 8-399 and 8-400.

8. ADVANCED COMMUNICATIONS NETWORKS

8.3 FRAME RELAY SERVICE (T)(M)

8.3.5 RATES AND CHARGES

H. 84 Months

4. Network-To-Network Information Transfer (NNIT) (Cont'd) (T)

	USOC	MONTHLY RATE	
• 336 or 384 kbps - NNIT, per Port			
- 1 PVC	17TA7	$153.00	(T)
Vintage[1]		89.43	
- 2 PVCs	17TB7	160.90	
Vintage[1]		98.34	
- 3 PVCs	17TC7	168.75	
Vintage[1]		107.24	
- 4 PVCs	17TD7	176.65	
Vintage[1]		116.15	
- 5 PVCs	17TE7	184.50	
Vintage[1]		125.04	
- 6 PVCs through 14[2], per PVC	17TG7	3.15	
- 15 PVCs through 24[3], per PVC	17TH7	2.25	
Vintage[1]		0.83	
- Each additional PVC over 24[4], per PVC	17TJ7	0.45	
Vintage[1]		0.30	

[1] Vintage rate in effect 11/14/94 through 12/13/96.
[2] For each PVC over 5, up to and including 14, add this rate to the monthly rate for 5 PVCs.
[3] For each PVC over 14, up to and including 24, add this rate to the total monthly rate for 14 PVCs.
[4] For each PVC over 24 add this rate to the total monthly rate for 24 PVCs. (M)

Certain material on this page formerly appeared on Page 8-239.
Certain material previously found on this page can now be found on Pages 8-400, 8-401, 8-402 and 8-403.

8. ADVANCED COMMUNICATIONS NETWORKS

8.3 FRAME RELAY SERVICE (T)(M)

8.3.5 RATES AND CHARGES

H. 84 Months

4. Network-To-Network Information Transfer (NNIT) (Cont'd) (T)

	USOC	MONTHLY RATE
• 448 or 512 kbps - NNIT, per Port		
- 1 PVC	17TA7	$184.50
Vintage[1]		111.76
- 2 PVCs	17TB7	193.05
Vintage[1]		123.55
- 3 PVCs	17TC7	201.60
Vintage[1]		135.33
- 4 PVCs	17TD7	210.15
Vintage[1]		147.11
- 5 PVCs	17TE7	218.70
Vintage[1]		158.89
- 6 PVCs through 14[2], per PVC	17TG7	3.40
- 15 PVCs through 24[3], per PVC	17TH7	2.25
Vintage[1]		1.10
- Each additional PVC over 24[4], per PVC	17TJ7	0.45
Vintage[1]		0.41

[1] Vintage rate in effect 11/14/94 through 12/13/96.
[2] For each PVC over 5, up to and including 14, add this rate to the monthly rate for 5 PVCs.
[3] For each PVC over 14, up to and including 24, add this rate to the total monthly rate for 14 PVCs.
[4] For each PVC over 24 add this rate to the total monthly rate for 24 PVCs. (M)

Certain material on this page formerly appeared on Page 8-240.
Certain material previously found on this page can now be found on Pages 8-404, 8-405 and 8-406.

8. ADVANCED COMMUNICATIONS NETWORKS

8.3 FRAME RELAY SERVICE (T)(M)

8.3.5 RATES AND CHARGES

H. 84 Months

4. Network-To-Network Information Transfer (NNIT) (Cont'd) (T)

	USOC	MONTHLY RATE	
• 672 or 768 kbps - NNIT, per Port			
- 1 PVC	17TA7	$252.00	(T)
Vintage[1]		157.09	
- 2 PVCs	17TB7	263.70	
Vintage[1]		175.27	
- 3 PVCs	17TC7	275.40	
Vintage[1]		193.45	
- 4 PVCs	17TD7	287.10	
Vintage[1]		211.62	
- 5 PVCs	17TE7	298.80	
Vintage[1]		229.80	
- 6 PVCs through 14[2], per PVC	17TG7	3.40	
- 15 PVCs through 24[3], per PVC	17TH7	2.25	
- Each additional PVC over 24[4], per PVC	17TJ7	0.45	

[1] Vintage rate in effect 11/14/94 through 12/13/96.
[2] For each PVC over 5, up to and including 14, add this rate to the monthly rate for 5 PVCs.
[3] For each PVC over 14, up to and including 24, add this rate to the total monthly rate for 14 PVCs.
[4] For each PVC over 24 add this rate to the total monthly rate for 24 PVCs. (M)

Certain material on this page formerly appeared on Page 8-240.
Certain material previously found on this page can now be found on Pages 8-407 and 8-408.

8. ADVANCED COMMUNICATIONS NETWORKS

8.3 FRAME RELAY SERVICE (T)(M)

8.3.5 RATES AND CHARGES

H. 84 Months

4. Network-To-Network Information Transfer (NNIT) (Cont'd) (T)

	USOC	MONTHLY RATE
• 1.544 Mbps - NNIT, per Port		
- 1 PVC	17TA7	$189.00
Vintage[1]		104.72
- 2 PVCs	17TB7	222.30
Vintage[1]		154.14
- 3 PVCs	17TC7	255.60
Vintage[1]		203.57
- 4 PVCs	17TD7	288.90
Vintage[1]		252.98
- 5 PVCs	17TE7	322.20
Vintage[1]		302.41
- 6 PVCs through 14[2], per PVC	17TG7	17.10
- 15 PVCs through 24[3], per PVC	17TH7	4.50
Vintage[1]		4.06
- Each additional PVC over 24[4], per PVC	17TJ7	0.45
Vintage[1]		0.14

[1] Vintage rate in effect 11/14/94 through 12/13/96.
[2] For each PVC over 5, up to and including 14, add this rate to the monthly rate for 5 PVCs.
[3] For each PVC over 14, up to and including 24, add this rate to the total monthly rate for 14 PVCs.
[4] For each PVC over 24 add this rate to the total monthly rate for 24 PVCs. (M)

Certain material on this page formerly appeared on Page 8-241.
Certain material previously found on this page can now be found on Page 8-409.

8. ADVANCED COMMUNICATIONS NETWORKS

8.3 FRAME RELAY SERVICE (T)(M)

8.3.5 RATES AND CHARGES

H. 84 Months

4. Network-To-Network Information Transfer (NNIT) (Cont'd) (T)

	USOC	MONTHLY RATE
• 44.736 Mbps - NNIT, per Port		
- 1 PVC	17TU7	$3,420.00
- 2 PVCs through 50[1], per PVC	17TV7	27.00
- 51 PVCs through 140[2], per PVC	17TW7	7.20
- 141 PVCs through 240[3], per PVC	17TY7	3.60
- 241 PVCs through 500[4], per PVC	17TZ7	1.80

[1] For each PVC over 1, up to and including 50, add this rate to the monthly rate for 1 PVC.
[2] For each PVC over 50, up to and including 140, add this rate to the total monthly rate for 50 PVCs.
[3] For each PVC over 140, up to and including 240, add this rate to the total monthly rate for 140 PVCs.
[4] For each PVC over 240, up to and including 500, add this rate to the total monthly rate for 240 PVCs. (M)

Certain material on this page formerly appeared on Page 8-241.1.
Certain material previously found on this page can now be found on Pages 8-410 and 8-411.

8. ADVANCED COMMUNICATIONS NETWORKS

8.3 FRAME RELAY SERVICE (T)(M)
8.3.5 RATES AND CHARGES (T)
H. 84 Months (Cont'd)

	USOC	NONRECURRING CHARGE	MONTHLY RATE	
5. Central Office Connecting Channel				
• Per connection between a Multiplexer and FRS Port or between a Company facility port and an FRS Port				
- For speeds up to 1.544 Mbps	CU8BR	$25.00	$ 0.59	
- For speeds up to 44.736 Mbps	CU8BR	50.00	9.00	
6. Transport Channels	N/A	[1]	[1]	(T)
7. Optional Features and Functions				
• Customer Network Management (CNM)				
- Per workstation registered address initial setup	NM6X7	15.00	60.30	
- Subsequent CNM order charge, per workstation registered address change or addition of CNM to existing FRS[2]	NR9FM	38.00	–	

[1] See Section 7 for Transport Channel rates and regulations.
[2] When adding CNM to existing FRS, the Subsequent CNM Order Charge applies in addition to the Nonrecurring Charge for the initial setup of CNM. (M)

Certain material on this page formerly appeared on Page 8-242.
Certain material previously found on this page can now be found on Pages 8-411, 8-412, 8-413 and 8-414.

8. ADVANCED COMMUNICATIONS NETWORKS

8.3 FRAME RELAY SERVICE (S-y)

8.3.5 RATES AND CHARGES

H. 84 Months

7. Optional Features and Functions (Cont'd)

	USOC	NONRECURRING CHARGE	MONTHLY RATE	
• Priority UNIT PVC[1] (Grandfathered), per PVC				(S-y) (C-y)
- 56 or 64 kbps	PV7X7	$50.00	$4.50	(S-y)
- 112 or 128 kbps	PV7X7	50.00	5.25	
- 224 or 256 kbps	PV7X7	50.00	6.00	
- 336 or 384 kbps	PV7X7	50.00	6.75	
- 448 or 512 kbps	PV7X7	50.00	7.50	
- 672 or 768 kbps	PV7X7	50.00	8.25	
- 1.544 Mbps	PV7X7	50.00	9.00	
- 44.736 Mbps	PV7X7	50.00	9.00	

[1] Priority PVC rates and charges apply in addition to the UNIT PVC rates and charges set forth preceding. (S-y)

(y) Reissued matter filed under Transmittal No. 28, to become effective December 6, 2000.

8. ADVANCED COMMUNICATIONS NETWORKS

8.3 FRAME RELAY SERVICE (Cont'd) (T-y)

(D-y)

(y) Reissued matter filed under Transmittal No. 28, to become effective December 6, 2000.

8. ADVANCED COMMUNICATIONS NETWORKS

8.4 *QWEST DSL* SERVICE

8.4.1 GENERAL

A. Description

QWEST DSL Service utilizes Asynchronous Transfer Mode (ATM) technology over dedicated transport facilities, Asymmetrical Digital Subscriber Line (ADSL) technology over Company-provided metallic local loop facilities and *QWEST DSL* ISDN Digital Subscriber Line Service (IDSL) technology over Company-provided 2-wire, private line facilities to provide customers with high speed data services. Qwest DSL Service is comprised of *QWEST DSL* Service, *QWEST DSL HOST* Service and *QWEST IDSL*.

QWEST DSL Service utilizes customer-provided equipment, located at the customer's premises, and Company-provided equipment, at Company Central Offices, to allow the Company to accept traffic from the customer and then separate and send bi-directional voice and data transmissions to the designated, separate voice and data networks. With the deployment of "Discrete Multitone" (DMT) technology April 4, 2001 and with the grandfathering *QWEST DSL SELECT* on June 14, 2001, "Carrierless Amplitude/Phase Modulation Protocol" (CAP) technology will no longer be offered as new service. (C)

Each *QWEST DSL* Service must be connected to a *QWEST DSL HOST* Service. The data connection from the *QWEST DSL* location to the *QWEST DSL HOST* location is a dedicated virtual point-to-point connection across a shared backbone network, ATM Cell Relay.

8. ADVANCED COMMUNICATIONS NETWORKS

8.4 *QWEST DSL* SERVICE (T)

8.4.1 GENERAL

A. Description (Cont'd)

QWEST IDSL provides a data only, 2-wire, private line service with a bi-directional data transmission capacity of 128 kbps or 144 kbps. Each *QWEST IDSL* must be connected to a *QWEST DSL HOST* Service. The data connection from the *QWEST IDSL* location to the *QWEST DSL HOST* location is a dedicated virtual point-to-point connection across a shared backbone network, ATM Cell Relay. (T) (T)

QWEST DSL HOST Service aggregates multiple data streams into a single host site using peak transmission speeds of 1.544 Mbps, and 3 Mbps up to 45 Mbps, in 3 Mbps increments. (T)

Technical Specifications for *QWEST DSL* Service are delineated in Qwest Corporation Technical Publications PUB 77392 and PUB 77399. (T)

The offering of *QWEST DSL* Service contemplates the use of existing ADSL, IDSL and ATM Cell Relay facilities. There may be occasions where *QWEST DSL* Service is not available due to facility limitations or where it may be necessary to construct such facilities. If Special Construction is involved the regulations as set forth in Tariff F.C.C. No. 2 apply. (T) (T)

8. ADVANCED COMMUNICATIONS NETWORKS

8.4 *QWEST DSL* SERVICE
8.4.1 GENERAL

A. Description (Cont'd)

During the Company's network maintenance and software update period, it may be necessary to temporarily place *QWEST DSL* Service central office equipment out of service. The Company also reserves the right to temporarily interrupt *QWEST DSL* Service at other times in emergency situations.

QWEST DSL Service is available in specific wire center locations where the Company has established ADSL, IDSL and ATM Cell Relay technology as specified in the National Exchange Carrier Association Tariff F.C.C. No. 4. Availability of ADSL or IDSL in a wire center does not guarantee customer access (C)
to any or all speeds. (C)

The Company will qualify copper facilities to determine the suitability of such facilities for *QWEST DSL* Service. The Company will not provide *QWEST DSL* Service on copper facilities that are unsuitable for the Service. Nor will the Company provide *QWEST DSL* Service if it determines that such provision will produce interference to other services.

QWEST DSL Service and *QWEST IDSL* Service will be provided subject to the availability and limitations of Company wire centers and outside plant facilities.

The customer is responsible for providing and installing all compatible customer provided equipment (CPE). Compatibility requirements are delineated in Qwest Corporation Technical Publication PUB 77392 and 77399. The modem must support customer-selected services.

8. ADVANCED COMMUNICATIONS NETWORKS

8.4 *QWEST DSL* SERVICE (T)
8.4.1 GENERAL (Cont'd)

B. Service Elements

1. *QWEST DSL* Service Charge (T)

The *QWEST DSL* Service Charge uses ADSL technology, which permits (T) simultaneous data over voice service using the same Company-provided flat-rated local exchange line. All *QWEST DSL* Services are provided as dedicated (T) connections, except the 256 kbps service which is offered as either a dedicated connection or as a per session connection. A dedicated connection provides a modem devoted specifically to the customer whereas a per-session connection utilizes pooled modems, however both services while connected offer equivalent performance.

Unlike dedicated connection customers, per session connection customers must vie for a modem in the pool and the potential for a busy state exists. The Company will limit each session connect time, but will ensure a session of no less than one hour but no more than four hours, with all customers having the same maximum session time. The Company will not change the maximum session time more than once a month. A per session connection customer can expect to establish a connection within one to two hours of the initial attempt.

8. ADVANCED COMMUNICATIONS NETWORKS

8.4 *QWEST DSL* SERVICE
8.4.1 GENERAL

B.1 (Cont'd)

Customers who purchase *QWEST DSL* Service will receive DMT protocol. All *CAP QWEST DSL* Services are grandfathered as of April 4, 2001, except CAP *QWEST DSL SELECT* which is grandfathered as of June 14, 2001. Customers who purchased *QWEST DSL* Service with CAP protocol prior to the respective grandfather dates will retain this service. CAP protocol is not capable of providing the precise service speeds as defined below for DMT protocol. (C) (C)

DMT *QWEST DSL* is available in 3 categories: *QWEST DSL 256, QWEST DSL DELUXE* and *QWEST DSL PRO* (Professional). *QWEST DSL PRO* is available from 256 kbps up to 7 Mbps (Down Stream) and includes Installation and Service Guarantees as set forth in D. and E., following. (C)

DMT RATE ELEMENTS	DOWN STREAM CONNECTION SPEED	UP STREAM CONNECTON SPEED	TYPE[1]	
QWEST DSL 256	256 kbps	128 kbps up to 256 kbps	Dedicated	(N) (N)
QWEST DSL DELUXE	256 up to 640 kbps	128 kbps up to 256 kbps	Dedicated	
QWEST DSL PRO DELUXE	256 up to 640 kbps	128 kbps up to 256 kbps	Dedicated	
QWEST DSL PRO 640 KBPS	640 kbps	128 kbps up to 640 kbps	Dedicated	
QWEST DSL PRO 1 MBPS	1.024 Mbps	128 kbps up to 1.024 Mbps	Dedicated	
QWEST DSL PRO 4 MBPS	4.0 Mbps	128 kbps up to 1.024 Mbps	Dedicated	
QWEST DSL PRO 7 MBPS	7.0 Mbps	128 kbps up to 1.024 Mbps	Dedicated	

[1] Upstream speeds will be set to allow the maximum speed within the range. Actual connection speed may be limited by the physical condition of the customer's line.

8. ADVANCED COMMUNICATIONS NETWORKS

8.4 *QWEST DSL* SERVICE
8.4.1 GENERAL

B.1 (Cont'd)

CAP *QWEST DSL DELUXE* and CAP *QWEST DSL PRO* are grandfathered service categories as of April 4, 2001, and CAP *QWEST DSL SELECT* [1] is grandfathered as of June 14, 2001. Existing customers of CAP *QWEST DSL* Services will be able to change the destination of their service, however any other changes, including speed changes, will require the customer to migrate to DMT *QWEST DSL* or completely disconnect service. CAP *QWEST DSL PRO* for existing customers includes Service Guarantees as set forth in 8.4.1. (C) (C)

CAP RATE ELEMENTS	DOWN STREAM CONNECTION SPEED	UP STREAM CONNECTON SPEED	TYPE
QWEST DSL SELECT	256 up to 640 kbps	272	Per Session
QWEST DSL DELUXE	256 up to 640 kbps	272	Dedicated
QWEST DSL PRO DELUXE	256 up to 640 kbps	272	Dedicated
QWEST DSL PRO 640 KBPS	640 kbps	544	Dedicated
QWEST DSL PRO 960 KBPS	960 kbps	816	Dedicated
QWEST DSL PRO 1.2 MBPS	1.280 Mbps	1088	Dedicated
QWEST DSL PRO 4 MBPS	4.480 Mbps	1088	Dedicated
QWEST DSL PRO 7 MBPS	7.168 Mbps	1088	Dedicated

[1] *QWEST DSL SELECT* is provisioned independent of DMT capacity and cannot use Dedicated DMT-based capacity. In the event an order for *QWEST DSL SELECT* Service is delayed for Company reasons, the customer will have the option of subscribing to a new DMT dedicated service and receiving a onetime credit of $30. The $30 credit will only be available if the *QWEST DSL SELECT* is delayed for Company reasons and the order is placed on or before June 13, 2001. This offer may be combined with other *DSL* Promotion. (C)

8. ADVANCED COMMUNICATIONS NETWORKS

8.4 *QWEST DSL* SERVICE (T)
8.4.1 GENERAL

B. Service Elements (Cont'd)

2. *QWEST DSL HOST* Service (T)

a. *QWEST DSL HOST* Ports (BSE) [1] (T)

The *QWEST DSL HOST* Port is a Port on an ATM switch at the serving wire center or *QWEST DSL HOST* Service Point. This element applies in conjunction with the 1.544 or 44.736 Mbps Private Line Transport *QWEST DSL HOST* Access Link, and the 44.736 Mbps ATM or 155.52 Mbps Optical Access Link. (T) (T)

The types of Ports which may be used with *QWEST DSL HOST* Service are: (T)

- 10BaseT Interface

  A 10BaseT interface connects a customer's *QWEST DSL HOST* (hub) location to a *QWEST DSL HOST* Services Access Link. 10BaseT interfaces are available with peak Port speeds of 1.544 Mbps, 3 Mbps, 6 Mbps, or 9 Mbps. (T) (T)

- 100BaseT Interface

  A 100BaseT interface connects a customer's *QWEST DSL HOST* (hub) location to a *QWEST DSL HOST* Services Access Link. 100BaseT interfaces are available with peak port speeds of 3 Mbps to 44.736 Mbps, in 3 Mbps increments. (T) (T)

[1] A 44.736 Mbps or 155.52 Mbps ATM Cell Relay Port may be used by customers with existing ATM Cell Relay Service for a *QWEST DSL HOST* Port. (T)

8. ADVANCED COMMUNICATIONS NETWORKS

8.4 *QWEST DSL* SERVICE (T)

8.4.1 GENERAL

B.2.a.[1] (Cont'd)

- 1.544 Mbps *QWEST DSL HOST* Port (T)

- 44.736 Mbps *QWEST DSL HOST* Port. This port is capable of terminating (T)
  QWEST DSL HOST Access Links with a bandwidth of 3 Mbps up through (T)
  44.736 Mbps, in 3 Mbps increments. [2]

  - A 44.736 Mbps ATM Cell Relay Port [1,2]
  - 155.52 Mbps ATM Cell Relay Port [1,2]

[1] A 44.736 Mbps or 155.52 Mbps ATM Cell Relay Port may be used by customers with existing ATM Cell Relay Service for a *QWEST DSL HOST* Port. (T)

[2] A minimum of one 3 Mbps bandwidth increment applies for each 44.736 Mbps *QWEST DSL HOST* Port, and for each 44.736 Mbps or 155.52 Mbps ATM Cell (T)
Relay Port used for *QWEST DSL HOST* Port. (T)

8. ADVANCED COMMUNICATIONS NETWORKS

8.4 *QWEST DSL* SERVICE (T)

8.4.1 GENERAL

B.2. (Cont'd)

b. *QWEST DSL HOST* Access Links (T)

QWEST DSL HOST Access Links are a physical transport facility that transmits (T)
data from the customer site to a *QWEST DSL HOST* Service Point within the
ATM Network. *QWEST DSL HOST* Access Links can be comprised of ATM (T)
Optical Access Links or Private Line Transport Services. If the serving wire
center of the *QWEST DSL HOST* customer location is a *QWEST DSL HOST* (T)
Service Point, then Private Line Transport Mileage does not apply. Private Line
Transport Services Mileage applies if the serving wire center of the *QWEST DSL* (T)
HOST customer location is not a *QWEST DSL HOST* Service Point. If the
QWEST DSL HOST Access Link is a Meet Point arrangement the Transport (T)
Mileage will be calculated to the actual ATM switch location.

The types of *QWEST DSL HOST* Access Links are following: (T)

- A 1.544 Mbps, Clear Channel DS1 Private Line Transport Services Channel Termination, as set forth in Section 7, preceding.
- A 44.736 Mbps DS3 Private Line Transport Services Channel Termination, as set forth in Section 7, preceding.
- A 44.736 Mbps or 155.52 ATM Cell Relay Optical Access Link (OAL).

8. ADVANCED COMMUNICATIONS NETWORKS

8.4 *QWEST DSL* SERVICE
8.4.1 GENERAL

B.2. (Cont'd)

c. Central Office Connecting Channel (COCC)

A COCC provides the ongoing interconnection from the *QWEST DSL HOST* Port to a DS1 or DS3 Service Channel Termination.

d. Service Points

Service Points are geographic locations designated by the Company where the *QWEST DSL HOST* Port can be accessed. The *QWEST DSL HOST* Port utilizes the ATM CRS Service Points, which are listed in the National Exchange Carrier Association Tariff F.C.C. No. 4.

e. Bandwidth

Bandwidth transports *QWEST DSL HOST* data transmission through the ATM Network, at rates from 3 Mbps to 44.736 Mbps, in 3 Mbps increments. A minimum of one 3 Mbps increment of *QWEST DSL HOST* bandwidth is required for each 44.736 Mbps *QWEST DSL HOST* Port or for each 44.736 Mbps ATM Port or 155.52 Mbps ATM Port used as a *QWEST DSL HOST* Port.

QWEST DSL HOST Service can terminate/aggregate both DMT and CAP (N)
protocol based *QWEST DSL*, ADSL, traffic. (N)

8. ADVANCED COMMUNICATIONS NETWORKS

8.4 *QWEST DSL* SERVICE (T)
8.4.1 GENERAL
B. Service Elements (Cont'd)

3. *QWEST IDSL* (T)

a. Channel Termination

The Channel Termination provides for a data only, 2-wire, private line path between the Customer designated premises and the serving wire center of that premises. Included as a part of the Channel Termination is a standard interface arrangement which defines the technical characteristics associated with the type of facilities to which the access service is to be connected at the Point of Termination (POT) and the type of signaling capability. One Channel Termination charge applies at the serving wire center of the Customer's designated premises where the channel terminates.

8. ADVANCED COMMUNICATIONS NETWORKS

8.4 *QWEST DSL* SERVICE (Cont'd) (T)

8.4.2 REGULATIONS

A. *QWEST DSL HOST* Service (T)

QWEST DSL HOST Service must be initially ordered as one of the fixed service periods as set forth in 8.4.4; however, at the completion of the initial fixed period, the customer may elect the month-to-month option for that service configuration, or may elect any of the fixed service periods. (T)

8. ADVANCED COMMUNICATIONS NETWORKS

8.4 *QWEST DSL* SERVICE (T)
8.4.2 REGULATIONS (Cont'd)

B. Obligations of the Customer

1. When a customer orders *QWEST DSL* Service, the customer must provide compatible customer premises equipment (CPE). In addition, the customer must specify the Company-provided flat-rated local exchange Telecommunications Number (TN) to be used. (T)

2. When a customer orders *QWEST DSL HOST* Service, the customer must provide the necessary information (e.g., Data Link Connection Identifier(s), and/or Internet Protocol) to provision *QWEST DSL HOST* Service using Company ATM Cell Relay Service. (T) (T)

3. The customer may request a design change to the service ordered. A design change is any change which requires engineering review. Design changes do not include a change of customer premises, end user premises or *QWEST DSL HOST* Access Link speeds. Changes of this nature will require the issuance of a new order and a cancellation of the original order. Cancellation charges are set forth in 5.2.3, preceding. Changes in *QWEST DSL* Service and *QWEST IDSL* which result in the service(s) pointing to a different *QWEST DSL HOST* Access Link are design changes and subject to the Design Change charge as set forth in 5.2.2, preceding. Changes requested on the Plant Test Date (PTD) or later will require the issuance of a new order. (T) (T) (T)

4. Changes in *QWEST DSL* Service and *QWEST IDSL* Service speeds will result in a Speed Change Charge as set forth in 8.4.5.A., following. (T)

8. ADVANCED COMMUNICATIONS NETWORKS

8.4 *QWEST DSL* SERVICE (T)
8.4.2 REGULATIONS (Cont'd)

C. Installation Guarantee *QWEST DSL PRO* (T)

In the event network difficulties develop during the installation of *QWEST DSL PRO* offerings, the Company guarantees resolution within five business days. Inability to resolve the problem within five business days will afford the customer a credit for one month of recurring charges. The credit will appear on the customer's next month's bill. (T)

D. Service Guarantee *QWEST DSL PRO* (T)

1. Satisfaction Assurance

The Company is committed to providing the customer with a satisfactory experience when subscribing to the *QWEST DSL PRO* offerings. If the customer cancels service within 30 days after installation due to dissatisfaction, the Company will refund any recurring and nonrecurring charges accrued and waive Termination Liability. (T)

2. Service Assurance

In the event the *QWEST DSL PRO* offerings are out of service 3 times in a 30 day period and the trouble is found to be in the customer's line, the customer may request to cancel service without having to pay any Termination Liability. This Service Assurance is not inclusive of service issues associated with the customer's modem or Internet Service Provider. (T)

3. Line Connect Speed Assurance

QWEST DSL PRO offerings are designed to deliver the line speed ordered by the subscriber. However, if the *QWEST DSL PRO* line connection speed cannot be maintained to the customer's satisfaction, the Company will at the customer's request, change the customer's speed to a lower speed without assessing the Speed/Destination Channel Change Charge. (T) (T)

8. ADVANCED COMMUNICATIONS NETWORKS

8.4 *QWEST DSL* SERVICE (Cont'd) (T)

8.4.3 RATE ELEMENTS

A. *QWEST DSL* Service Charge (T)

A nonrecurring charge and a monthly rate apply per termination. If a customer requests a different ADSL speed and/or a change in their designated *QWEST DSL* (T)
HOST location, a change charge for Speed/Destination Channel Change applies per (T)
order. If a customer changes from a dedicated connection to a per session connection or vice versa, a change charge for Change from Dedicated to Per Session Connection applies.

When a change in speed or destination channel is requested at the same time as a change from a dedicated to a shared connection, or vice versa, only the higher of the *QWEST DSL* Change Charges applies. (T)

8. ADVANCED COMMUNICATIONS NETWORKS

8.4 *QWEST DSL* SERVICE (T)
8.4.3 RATE ELEMENTS SERVICE (Cont'd)

B. *QWEST DSL HOST* Service (T)

1. Port (BSE)

A nonrecurring charge and monthly rate apply for each 1.5 Mbps *QWEST DSL HOST* Port. (T) For a 44.736 Mbps *QWEST DSL HOST* Port, a nonrecurring charge (T) and monthly rate apply for the initial Port and an additional recurring rate applies for each bandwidth increment of 3 Mbps.

2. Access Link

The rates and charges for other Company-provided services used as access links for *QWEST DSL HOST* Service are in addition to the rates and charges for the (T) *QWEST DSL HOST* Port. A DS1 Service and/or DS3 Service channel termination (T) may be purchased by the customer, as set forth in Private Line Transport Services Section 7, preceding. An ATM Cell Relay Service 44.736 Mbps Optical Access Link may be purchased by the customer, as set forth in 8.5.1.

3. Port Change Charge

A nonrecurring charge applies each time a customer changes bandwidth on a *QWEST DSL HOST* or ATM CRS Port, subsequent to the initial installation, e.g., for a change from 3 Mbps to 9 Mbps, one change charge applies. A nonrecurring (T) charge also applies when adding or changing *QWEST DSL HOST* bandwidth increments to an existing 44.736 Mbps or 155.52 Mbps ATM Cell Relay Port. (T)

An upgrade of port speeds 1.544 Mbps, 44.736 Mbps, or 155.52 Mbps requires a change of Access Link as well and will be considered a discontinuance of one service and establishment of new service.

Downgrades in port speeds 1.544 Mbps, 44.736 Mbps, or 155.52 Mbps requires a change of Access Link as well and will be considered a discontinuance of one service and establishment of new service. In addition Termination Liability and Waiver Policy will be applicable for downgrades.

8. ADVANCED COMMUNICATIONS NETWORKS

8.4 *QWEST DSL* SERVICE (T)
8.4.3 RATE ELEMENTS SERVICE
B. *QWEST DSL HOST* Service (Cont'd) (T)

4. Central Office Connecting Channel (COCC)

   One Central Office Connecting Channel nonrecurring charge and monthly rate applies per connection. The rates and charges for a DS1 Service COCC are set forth in Section 7.11, preceding; the rates and charges for a DS3 Service COCC are set forth in Section 7.12, preceding.

5. Bandwidth

   A monthly rate applies for each 3 Mbps increment of Bandwidth, up through 45 Mbps. A minimum of one 3 Mbps increment of Bandwidth applies for each 45 Mbps *QWEST DSL HOST* Port. (T)

8. ADVANCED COMMUNICATIONS NETWORKS

8.4 *QWEST DSL* SERVICE (Cont'd)

8.4.4 PRICING PLANS

A. Pricing Plan Terms and Conditions

1. *QWEST DSL* Service may be ordered on a month-to-month or on a Fixed Period Service Rate Plan for 12, 36 or 60 months at the rates set forth in 8.4.5, following. Exception: as of August 7, 2001, *QWEST DSL DELUXE* will no longer offer Fixed Period Service Rate Plans for 12, 36, or 60 months to new customers or for renewal once existing plans reach termination. (C) | (C)

2. *QWEST DSL* Volume Plan provides *QWEST DSL HOST* customers discounted rates if they agree to the conditions of either the Basic Discount Option or one of the Volume Commitment Options.

   - The Basic Discount Option is for the customer who commit to having a minimum of 15,000 active and billable *QWEST DSL* lines by the end of their initial 12 month period. The initial 12 month period will start on the date the customer has the first *QWEST DSL* line installed.

   - The Volume Commitment Option I plan allows the customer to choose the number of *QWEST DSL* lines they will acquire over the 36 month Fixed Period Service Rate Plan with a subscription range of 60,001 lines to 400,000 lines.

   - The Volume Commitment Option II plan allows the customer to choose a 5-year Fixed Period Service Rate Plan with a minimum commitment of 150,000 subscription lines by the end of the first year and a minimum 200,001 subscription lines as of the end of the third, fourth and fifth year periods. If the customer has paid the Company for 4 million months of service by the end of the third year, the customer will be considered to have met all commitment levels. The months of service are calculated as follows:

     - Number of DSL lines times the number of months the services are active and billing, equals months of service.

     - Example: 25,000 DSL lines per month times 12 months equals 300,000 months of service during a year.

   - The Volume Commitment Option III plan allows the customer to choose the number of *QWEST DSL* lines they will acquire over the 60-month Fixed Period Service Rate Plan with a subscription range of 120,000 lines to 500,000 lines.

8. ADVANCED COMMUNICATIONS NETWORKS

8.4 *QWEST DSL* SERVICE
8.4.4 PRICING PLANS

A.2. (Cont'd)

The TLA addresses specific terms and conditions for each plan as set forth in 8.1.5, preceding. (M)

Volume Commitment Options I, II and III are applicable to monthly rates only. The discounts are calculated on the month-to-month *QWEST DSL* Service rates as set forth in 8.4.5, following. Nonrecurring charges will not be discounted for Volume Commitment Option I and nonrecurring charges for Volume Commitment Option II will not apply. Volume Commitment Option I is available on a 36 month Fixed Period Rate Plan and Volume Commitment Options II and III are available on a 60 month Fixed Period Service Rate. (C)

- Obligations of customers who subscribe to *QWEST DSL* Volume Plans: (C)
  - Must purchase *QWEST DSL HOST* Service in all LATAs where the customer subscribes to *QWEST DSL* Service
  - Must submit orders to the Company electronically in a format and manner designated by the Company
  - Must provide customer premises equipment to its end users
  - Must deal directly with its end users and be solely liable with respect to all matters relating to the service, including marketing, ordering, technical support, billing and collections
  - Must direct end users not to contact the Company regarding any aspect of the service

- The telecommunications services offered under the *QWEST DSL* Volume Plan are provided at wholesale to carriers and non-carriers. The telecommunications services offered under the *QWEST DSL* Volume Plan are not services that the Company provides at retail, and, accordingly, are not subject to the rate provisions of Sections 251 (c) (4) and 252 (d) (3) of the Communications Act, 47 U.S.C.§§ 251 (c) (4), 252 (d) (3). (M)

Certain material on this page formerly appeared on Page 304.

8. ADVANCED COMMUNICATIONS NETWORKS

8.4 *QWEST DSL* SERVICE
8.4.4 PRICING PLANS

A. Pricing Plan Terms and Conditions (Cont'd)

3. *QWEST DSL HOST* Service and *QWEST IDSL* must be initially ordered under a Fixed Period Service Rate Plan. At the end of the initial service period, the service may be obtained on a month-to-month basis or any of the specified fixed period service rate periods. The customer may order a Fixed Period Service Rate Plan for 12, 36 or 60 months at the rates set forth in 8.4.5, following.

4. Monthly rates for the entire fixed period will be stabilized from Company-initiated increases, at the rates in effect for the fixed period on the service date. The customer must specify the length of the fixed period at the time the service is ordered. The minimum service period for a *QWEST DSL*, *QWEST IDSL* or *QWEST DSL HOST* fixed period service rate plan is 12 months.

5. *QWEST DSL HOST* Service rate elements may be ordered under any optional rate plan. For example, the customer may order the Access Link under the 36-month fixed period service rate plan and the *QWEST DSL HOST* Port under the 60-month fixed period service rate plan.

6. When a customer with ISDN or *QWEST IDSL* Service migrates to a *QWEST DSL* Service at the same address of record a nonrecurring charge will not apply. In addition, TLA will be waived if a *QWEST IDSL* customer migrates to *QWEST DSL* at the same address of record.

7. Fixed Period Rate Plans established on or before August 31, 1998, will automatically receive a rate decrease if the Company decreases rates during the term of the plan. Effective September 1, 1998, customers establishing a Fixed Period Rate Plan, will not receive a rate decrease if the Company decreases rates during the term of the plan.

Certain material previously found on this page can now be found on Page 305.1.

8. ADVANCED COMMUNICATIONS NETWORKS

8.4 *QWEST DSL* SERVICE
8.4.4 PRICING PLANS

A. Pricing Plan Terms and Conditions (Cont'd)

8. For Volume Commitment Option I at the end of the fixed period, the customer may select a new fixed period, convert to monthly rates (month-to-month) or terminate the service. The rates will be those in effect at the time the new fixed period begins. Should the customer not make a choice by the end of a fixed period, the service will automatically revert to the effective monthly (month-to-month) rates. If service is continued, nonrecurring charges will not apply. (M) (M)

9. For Volume Commitment Option II upon mutual agreement at least 6 months prior to the expiration of the Initial Term, the plan may be renewed for one additional 12-month term with the same terms and conditions. (N)

10. For Volume Commitment Option III at least 30 days notice prior to the expiration of the Initial Term, the plan may be renewed for three additional 12-month terms with the same terms and conditions. (N)

Certain material on this page formerly appeared on Page 305.

8. ADVANCED COMMUNICATIONS NETWORKS

8.4 *QWEST DSL* SERVICE (T)
8.4.4 PRICING PLANS

B. Changes to Rate Plans

Services rated under the month-to-month plan or an existing fixed period service rate plan may be upgraded to a fixed period service rate plan at any time the customer chooses without incurring nonrecurring charges or Termination Liability. This upgrade will be allowed provided the channel interface and the customer-designated premises remain the same. Additionally, the new fixed period service rate plan must meet or exceed the fixed period service rate plan being upgraded.

The monthly rates will be those in effect at the time the new fixed period begins. New minimum service periods apply to upgrades in rate plans.

If a customer chooses to change an existing service provided under a fixed period service rate plan to month-to-month billing, the change will be treated as a discontinuance of the existing service and an establishment of new service. Termination Liability, as set forth in 8.1.5, and a new minimum period will apply in addition to the new monthly rates for the service.

C. Discontinuance of Service

If the customer chooses to discontinue all or a portion of the service prior to the expiration of the fixed period service, Termination Liability, as set forth in 8.1.5, will apply.

8. ADVANCED COMMUNICATIONS NETWORKS

8.4 *QWEST DSL* SERVICE (Cont'd)

8.4.5 RATES AND CHARGES

A. *QWEST DSL* Service

Fixed Period Service Rate Plans for 12, 36, and 60 months are grandfathered as set forth in 8.4.4, preceding, for *QWEST DSL DELUXE.* (N) | (N)

1. DMT *QWEST DSL* Service Charge, per termination

	USOC	NONRECURRING CHARGE	MONTHLY RATE
a. DMT *QWEST DSL 256*,			
• Dedicated connection			
- Monthly	GRLSM	$69.00	$21.95
b. DMT *QWEST DSL DELUXE*,			
• Dedicated connection			
- Monthly	GRLAM	69.00	31.95 (I)
- 12 Months	GRLA1	69.00	29.95
- 36 Months	GRLA3	69.00	29.95
- 60 Months	GRLA5	69.00	29.95
c. DMT *QWEST DSL PRO DELUXE*,			
• Dedicated connection			
- Monthly	GRLGM	69.00	55.00 (I)
- 12 Months	GRLG1	69.00	55.00
- 36 Months	GRLG3	69.00	55.00
- 60 Months	GRLG5	69.00	55.00 (I)

8. ADVANCED COMMUNICATIONS NETWORKS

8.4 *QWEST DSL* SERVICE
8.4.5 RATES AND CHARGES

A.1. (Cont'd)

	USOC	NONRECURRING CHARGE	MONTHLY RATE
d. DMT *QWEST DSL PRO 640 KBPS*			
• Dedicated connection			
- Monthly	GRLBM	$69.00	$66.00 (I)
- 12 Months	GRLB1	69.00	64.00
- 36 Months	GRLB3	69.00	62.00
- 60 Months	GRLB5	69.00	60.00 (I)
e. DMT *QWEST DSL PRO 1 MBPS*			
• Dedicated connection			
- Monthly	GRLDM	69.00	88.00 (I)
- 12 Months	GRLD1	69.00	84.00
- 36 Months	GRLD3	69.00	80.00
- 60 Months	GRLD5	69.00	76.00 (I)

8. ADVANCED COMMUNICATIONS NETWORKS

8.4 *QWEST DSL* SERVICE
8.4.5 RATES AND CHARGES

A.1. (Cont'd)

	USOC	NONRECURRING CHARGE	MONTHLY RATE
f. DMT *QWEST DSL PRO 4 MBPS*			
• Dedicated connection			
- Monthly	GRLEM	$69.00	$165.00 (I)
- 12 Months	GRLE1	69.00	160.00
- 36 Months	GRLE3	69.00	155.00
- 60 Months	GRLE5	69.00	150.00 (I)
g. DMT *QWEST DSL PRO 7 MBPS*			
• Dedicated connection			
- Monthly	GRLFM	69.00	275.00 (I)
- 12 Months	GRLF1	69.00	269.00
- 36 Months	GRLF3	69.00	263.00
- 60 Months	GRLF5	69.00	257.00 (I)

8. ADVANCED COMMUNICATIONS NETWORKS

8.4 *QWEST DSL* SERVICE
8.4.5 RATES AND CHARGES

A. DMT *QWEST DSL* Service (Cont'd)

	USOC	NONRECURRING CHARGE	
2. DMT *QWEST DSL* Change Charge, per order			(N)
• Speed/Destination Channel Change[1]	REAKM	$30.00	
• Change from Dedicated to Per Session Connection, or vice versa[2]	REAK9	30.00	(N)

[1] The Speed/Destination Channel Change Charge will not apply for speed changes when upgrading speeds or changing within DMT *QWEST DSL PRO*. (N)

[2] When a change in speed or destination channel is requested at the same time as a change from a dedicated to a shared connection, or vice versa, only the higher of the DMT *QWEST DSL* Change Charges applies. (N)

Certain material previously found on this page can now be found on Page 8-310.3.

8. ADVANCED COMMUNICATIONS NETWORKS

8.4 *QWEST DSL* SERVICE (Cont'd)

8.4.5 RATES AND CHARGES

B. CAP *QWEST DSL* Service[1]

1. CAP *QWEST DSL* Service Charge, per termination

	USOC	NONRECURRING CHARGE	MONTHLY RATE
a. CAP *QWEST DSL SELECT*,			
• Per session connection			
- Monthly	HRCAM	$69.00	$21.95 (I)
- 12 Months	HRCA1	69.00	19.95
- 36 Months	HRCA3	69.00	19.95
- 60 Months	HRCA5	69.00	19.95
b. CAP *QWEST DSL DELUXE*,			
• Dedicated connection			
- Monthly	HRLAM	69.00	31.95 (I)
- 12 Months	HRLA1	69.00	29.95
- 36 Months	HRLA3	69.00	29.95
- 60 Months	HRLA5	69.00	29.95

[1] All CAP *QWEST DSL* Services are grandfathered as of April 4, 2001, except CAP *QWEST DSL SELECT* which is grandfathered as of June 14, 2001.

8. ADVANCED COMMUNICATIONS NETWORKS

8.4 *QWEST DSL* SERVICE
8.4.5 RATES AND CHARGES

B.1. (Cont'd)

	USOC	NONRECURRING CHARGE	MONTHLY RATE
c. CAP *QWEST DSL PRO DELUXE*			
• Dedicated connection			
- Monthly	H5LGM	$69.00	$55.00 (I)
- 12 Months	H5LG1	69.00	55.00
- 36 Months	H5LG3	69.00	55.00
- 60 Months	H5LG5	69.00	55.00 (I)
d. CAP *QWEST DSL PRO 640 KBPS*			
• Dedicated connection			
- Monthly	HRLBM	69.00	66.00 (I)
- 12 Months	HRLB1	69.00	64.00
- 36 Months	HRLB3	69.00	62.00
- 60 Months	HRLB5	69.00	60.00 (I)

8. ADVANCED COMMUNICATIONS NETWORKS

8.4 *QWEST DSL* SERVICE
8.4.5 RATES AND CHARGES

B.1. (Cont'd)

	USOC	NONRECURRING CHARGE	MONTHLY RATE
e. CAP *QWEST DSL PRO 960 KBPS*			
• Dedicated connection			
- Monthly	HRLCM	$69.00	$77.00 (I)
- 12 Months	HRLC1	69.00	74.00
- 36 Months	HRLC3	69.00	71.00
- 60 Months	HRLC5	69.00	68.00 (I)
f. CAP *QWEST DSL PRO 1.2 MBPS*			
• Dedicated connection			
- Monthly	HRLDM	69.00	88.00 (I)
- 12 Months	HRLD1	69.00	84.00
- 36 Months	HRLD3	69.00	80.00
- 60 Months	HRLD5	69.00	76.00 (I)

8. ADVANCED COMMUNICATIONS NETWORKS

8.4 *QWEST DSL* SERVICE
8.4.5 RATES AND CHARGES

B.1. (Cont'd)

	USOC	NONRECURRING CHARGE	MONTHLY RATE
g. CAP *QWEST DSL PRO 4 MBPS*			
• Dedicated connection			
- Monthly	HRLEM	$69.00	$165.00 (I)
- 12 Months	HRLE1	69.00	160.00
- 36 Months	HRLE3	69.00	155.00
- 60 Months	HRLE5	69.00	150.00 (I)
h. CAP *QWEST DSL PRO 7 MBPS*			
• Dedicated connection			
- Monthly	HRLFM	69.00	275.00 (I)
- 12 Months	HRLF1	69.00	269.00
- 36 Months	HRLF3	69.00	263.00
- 60 Months	HRLF5	69.00	257.00 (I)

8. ADVANCED COMMUNICATIONS NETWORKS

8.4 *QWEST DSL* SERVICE
8.4.5 RATES AND CHARGES

B. CAP *QWEST DSL* Service (Cont'd)

	USOC	NONRECURRING CHARGE
2. CAP *QWEST DSL* Change Charge, [1] per order		
• Destination Channel Change[2]	REAKM	$30.00

[1] All CAP *QWEST DSL* Services are grandfathered as of April 4, 2001, except CAP *QWEST DSL SELECT* which is grandfathered as of June 14, 2001. (C)

[2] TheDestination Channel Change Charge will not apply for CAP *QWEST DSL PRO*.

8. ADVANCED COMMUNICATIONS NETWORKS

8.4 *QWEST DSL* SERVICE
8.4.5 RATES AND CHARGES

C. *QWEST DSL* Volume Plan (T)

The following discount percentages apply to the respective month-to-month recurring rate for the *QWEST DSL* service available to the option chosen by the customer as set forth in 8.4.5.A, preceding. (C) (C)

TOTAL DSL ACTIVE PORTS IN SERVICE	DISCOUNT % OF MONTHLY RATE
• Basic Discount Option[1] (T)	
- Up to 15,000	11%
- 15,001 to 30,000	12%
- 30,001 to 60,000	13%
- 60,001 to 120,000	14%
- 120,001 to 200,000	15%
- 200,001 to 400,000	17%
• Volume Commitment Option I[1] (T)	
- 60,001 to 120,000	14%
- 120,001 to 200,000	15%
- 200,001 to 400,000	17%

[1] The nonrecurring rates for *QWEST DSL* service as set forth in 8.4.5.A, preceding, will apply to this Plan, but not at a discounted rate.

8. ADVANCED COMMUNICATIONS NETWORKS

8.4 *QWEST DSL* SERVICE
8.4.5 RATES AND CHARGES

C. *QWEST DSL* Volume Plan(Cont'd)

TOTAL DSL ACTIVE PORTS IN SERVICE	DISCOUNT % OF MONTHLY RATE	
• Volume Commitment Option II[1]		(N)
- 1 and greater:		
QWEST DSL 256	25%	
QWEST DSL SELECT	17%	
QWEST DSL DELUXE	17%	
- 1 and greater[2]:		
QWEST DSL 256	32%	
QWEST DSL SELECT	25%	
QWEST DSL DELUXE	25%	
• Volume Commitment Option III[3]		
- Up to 120,000 – 18 months	24.9%	
- Up to 260,000 – 30 months	24.9%	
- Up to 400,000 – 42 months	24.9%	
- Up to 500,000 – 54 months	24.9%	(N)

[1] The nonrecurring rates for *QWEST DSL* service as set forth in 8.4.5.A, preceding, will not apply to this Plan. (N)

[2] Applies only to years 4 and 5 of the Plan once the customer has paid the Company for 4 million months of service.

[1] Volume Commitment Option III has an Activation Fee of $35.00 per end user subscriber line, in lieu of the nonrecurring rates set forth in 8.4.5.A, preceding. (N)

8. ADVANCED COMMUNICATIONS NETWORKS

8.4 *QWEST DSL* SERVICE
8.4.5 RATES AND CHARGES (Cont'd)

D. *QWEST DSL HOST* Access Link (T)

	USOC	NONRECURRING CHARGE	MONTHLY RATE
• 1.544 Mbps	N/A	[1]	[1]
• 44.736 Mbps	N/A	[2]	[2]
• 155.52 Mbps	N/A	[2]	[2]

E. *QWEST DSL HOST* Port (BSE) (T)

1. 1.5 Mbps, per Port

• Monthly	HPRGM	$500.00	$910.00
• 12 Months	HPRG1	500.00	455.00
• 36 Months	HPRG3	500.00	409.50
• 60 Months	HPRG5	500.00	364.00

[1] DS1 Service Channel Termination rates and charges are as set forth in 7.11, preceding.

[2] ATM CRS Optical Access Link rates and charges are as set forth in 8.5.5, following and DS3 Service Channel Termination rates and charges are as set forth in 7.12, preceding.

8. ADVANCED COMMUNICATIONS NETWORKS

8.4 *QWEST DSL* SERVICE
8.4.5 RATES AND CHARGES

E. *QWEST DSL HOST* Port (Cont'd) (T)

2. 44.736 Mbps, per Port

A minimum of one 3 Mbps Bandwidth increment applies for each 44.736 Mbps *QWEST DSL HOST* Port. The nonrecurring charge includes the installation of the Bandwidth increment(s) installed at the same time as the *QWEST DSL HOST* Port.

	USOC	NONRECURRING CHARGE	MONTHLY RATE
• Monthly	HPRKM	$161.45	$440.00
• 12 Months	HPRK1	161.45	418.00
• 36 Months	HPRK3	161.45	407.00
• 60 Months	HPRK5	161.45	396.00
3. 155.52 Mbps, per Port		[1]	[1]

[1] See ATM Cell Relay Service Fixed Rate, per Port, 155.52 Mbps, 8.5.5, following.

8. ADVANCED COMMUNICATIONS NETWORKS

8.4 *QWEST DSL* SERVICE
8.4.5 RATES AND CHARGES (Cont'd)

F. Bandwidth (T)

Applicable only to the 44.736 Mbps *QWEST DSL HOST* Port or ATM CRS Port used in lieu of a *QWEST DSL HOST* Port. A minimum of one increment applies for each 44.736 Mbps *QWEST DSL HOST* Port or ATM CRS Port used in lieu of a *QWEST DSL HOST* Port.

1. Each 3 Mbps Increment, up to 44.736 Mbps, per increment

	USOC	NONRECURRING CHARGE	MONTHLY RATE
• Monthly	HB1HM	–	$478.00
• 12 Months	HB1H1	–	239.00
• 36 Months	HB1H3	–	232.00
• 60 Months	HB1H5	–	227.00

2. *QWEST DSL HOST* Port Bandwidth Change Charge

• 3 to 45 Mbps port speed bandwidth change, per speed change	REAKN	–	100.00

8. ADVANCED COMMUNICATIONS NETWORKS

8.4 *QWEST DSL* SERVICE
8.4.5 RATES AND CHARGES (Cont'd)

	NONRECURRING CHARGE	MONTHLY RATE	
G. Central Office Connecting Channel			(T)
• Per connection	[1]	[1]	

[1] COCC rates and charges are as set forth in 7.11 or 7.12, preceding.

8. ADVANCED COMMUNICATIONS NETWORKS

8.4 *QWEST DSL* SERVICE
8.4.5 RATES AND CHARGES (Cont'd)

H. *QWEST IDSL* Service (T)

1. Channel Termination, per termination

	USOC	MONTHLY RATE	NONRECURRING CHARGE
• Monthly	T8XYX	$69.95	$250.00
• 12 Months	T8XY1	69.95	250.00
• 36 Months	T8XY3	65.95	250.00
• 60 Months	T8XY5	59.95	250.00
2. Speed Change Charge, per order	REALY	–	30.00

8. ADVANCED COMMUNICATIONS NETWORKS

8.5 ATM CELL RELAY SERVICE (T)(M)

8.5.1 GENERAL

A. Description (T)

ATM Cell Relay Service (ATM CRS) is a connection-oriented communications service that uses Asynchronous Transfer Mode (ATM) technology. The service provides customers with high-speed, low-delay information transfer capacity, which supports applications that require near-real-time mixed media (data, video, image, voice) communications among multiple locations. ATM CRS supports transmission speeds of 1.544 Mbps, 45 Mbps and 155 Mbps.

ATM CRS requires the use of customer terminal equipment that functions as a multiplexer/router/hub or ATM switch. This terminal equipment must be purchased separately from the ATM CRS and must conform to industry standards. The terminal equipment accumulates customer traffic and puts it into a cell relay format suitable for transmission over the ATM CRS Network. (M)

Certain material on this page formerly appeared on Page 8-31.

8. ADVANCED COMMUNICATIONS NETWORKS

8.5 ATM CELL RELAY SERVICE (T)(M)

8.5.1 GENERAL

A. Description (Cont'd) (T)

ATM CRS conforms to industry standards and is only provided over fiber optic facilities or other compatible private line facilities, such as Synchronous Service Transport (SST), DS3 Service or DS1 Service. Technical Specifications for ATM CRS are delineated in Qwest Corporation Technical Publication PUB 77378.

A customer may request that the facilities used to provide ATM CRS be specially routed. The regulations, rates and charges for Special Facilities Routing (i.e., Diversity) are as set forth in Section 11, following.

ATM connectivity between two separate LSS networks and/or between LSS and ATM CRS locations can be used for LSS provisioning. The connection between the LSS/LSS or LSS/ATM CRS locations can be an ATM CRS virtual channel connection (VCC). VCCs for the LSS/LSS or LSS to ATM CRS option are only available as Unspecified Bit Rate Service (UBRS) for monthly or fixed period (T)
service rate plans of 12, 36 and 60 months. The VCC and UBRS rate regulations
and rates are as set forth in 8.5.3 and 8.5.5., following. (T)(M)

Certain material on this page formerly appeared on Page 8-31.

8. ADVANCED COMMUNICATIONS NETWORKS

8.5 ATM CELL RELAY SERVICE (T)(M)
8.5.1 GENERAL (Cont'd)

B. Service Elements (T)

1. Network Interface

   The network interface is the point at which a customer's data transmissions first enters the network supporting ATM CRS. It is the point of interconnection between Company communication facilities and customer terminal equipment.

2. Optical Access Link (OAL)

   An ATM CRS Optical Access Link provides access to the ATM CRS Network, connecting customer facilities at the network interface with a corresponding ATM CRS Cell Transfer element. An ATM CRS Optical Access Link is only available at ATM CRS Service Points. An ATM CRS Optical Access Link may be optioned with 45 or 155 Mbps OAL Protection as set forth in 10., following. (T)

3. Stand-Alone Optical Access Link (SAOAL)

   An ATM CRS Stand-Alone Optical Access Link connects customer facilities to cell relay networks provided by service providers other than the Company. Private line transport mileage and/or a Central Office Connecting Channel (COCC) may be required in conjunction with a SAOAL in order to connect the (T)
   customer's serving wire center, or node, with the serving wire center, or node of another ATM CRS provider. A SAOAL may be optioned with 45 or 155 Mbps (T)
   OAL Protection as set forth in 10., following. (T)(M)

Certain material on this page formerly appeared on Pages 8-31 and 8-32.

8. ADVANCED COMMUNICATIONS NETWORKS

8.5 ATM CELL RELAY SERVICE
8.5.1 GENERAL

B. Service Elements (Cont'd)

4. Port

ATM CRS ports are the physical entry points into the ATM CRS Network for Optical Access Links or other compatible private line facilities, such as Synchronous Service Transport (SST), DS3 Service or DS1 Service. They are the originating and terminating points for Virtual Path Connections and Virtual Channel Connections. Ports include the electronic equipment used in connecting these service elements to the ATM CRS Network. They enable customers to allocate bandwidth to applications at customer-designated transmission speeds of up to 1.5 Mbps, 45 Mbps or 155 Mbps.

The customer may also utilize a 44.736 Mbps *QWEST DSL HOST* Port in lieu of a 44.736 Mbps ATM Cell Relay Port, as set forth in 8.4.5. Customers will be able to allocate ATM bandwidth to applications at customer-designated transmission speed of 44.736 Mbps for their *QWEST DSL HOST* Port. (T)

5. Service Points

Service Points are geographic locations designated by the Company where the ATM CRS Network can be accessed. The ATM CRS Service Points are listed in the National Exchange Carrier Association Tariff FCC No. 4.

8. ADVANCED COMMUNICATIONS NETWORKS

8.5 ATM CELL RELAY SERVICE (T)(M)
8.5.1 GENERAL
B. Service Elements (Cont'd) (T)

6. Logical Connections

ATM CRS logical connections function as bidirectional Permanent Virtual Connections (PVCs). ATM CRS will support a point-to-point logical connection configuration between two ports. Logical Connections may be any of three service types: Peak Cell Rate Service, Sustained Cell Rate Service, or Unspecified Bit Rate Service.

a. Virtual Channel Connections (VCC)

A VCC is a logical connection from one ATM CRS Port to another CRS Port within the ATM CRS Network.

VCCs are available as Peak Cell Rate Service and/or Sustained Cell Rate Service, at customer-selected Cell Transfer speed(s), depending on the customer's networking requirements which include appropriate overheads. VCCs are also available as Unspecified Bit Rate Service.

b. Virtual Path Connections (VPC)

A VPC is a collection of VCCs routed together as one unit, for which the customer has the ability to manage the speeds of the individual VCCs within the customer-designated Cell Transfer element.

VPCs are available as Peak Cell Rate Service, at customer-selected Cell Transfer speed(s), depending on the customer's networking requirements, which include appropriate overheads. (T) (M)

Certain material on this page formerly appeared on Page 8-33.

8. ADVANCED COMMUNICATIONS NETWORKS

8.5 ATM CELL RELAY SERVICE (T)(M)

8.5.1 GENERAL

B.6. (Cont'd) (T)

c. Logical connections are available at base speeds (e.g. 64 kbps, 1 Mbps, 1.544 Mbps, etc.) determined by the speed of the ATM CRS Port (1.5 Mbps, 45 Mbps or 155 Mbps). The customer selects a base speed for each VCC or VPC they purchase which includes appropriate overheads. The bandwidth for each VCC or VPC is determined by multiplying the base speed by the number of increments of that base speed selected by the customer. Technical Specifications for ATM CRS are delineated in Qwest Corporation Technical Publication PUB 77378.

Logical connections are available at the following incremental base speeds:

AVAILABLE BASE SPEEDS:

On a 1.544 Mbps Port:
Increments of 64 kbps
Increments of 75 kbps
Increments of 1 Mbps

On a 45 Mbps Port:
Increments of 64 kbps
Increments of 75 kbps
Increments of 1 Mbps
Increments of 1.544 Mbps
Increments of 1.787 Mbps
Increments of 40.7 Mbps (M)

Certain material on this page formerly appeared on Pages 8-33 and 8-34.

8. ADVANCED COMMUNICATIONS NETWORKS

8.5 ATM CELL RELAY SERVICE (T)(M)

8.5.1 GENERAL

B.6.c. (Cont'd)

AVAILABLE BASE SPEEDS: (T)

On a 155 Mbps Port:
Increments of 64 kbps
Increments of 75 kbps
Increments of 1 Mbps
Increments of 1.544 Mbps
Increments of 1.787 Mbps
Increments of 40.7 Mbps
Increments of 149 Mbps

Unspecified Bit Rate Service offers bandwidth increments of 64 kbps and 1 Mbps. (M)

Certain material on this page formerly appeared on Page 8-34.

8. ADVANCED COMMUNICATIONS NETWORKS

8.5 ATM CELL RELAY SERVICE (T)(M)

8.5.1 GENERAL

B.6.c. (Cont'd) (T)

A customer may select multiple logical connections of different service classes on an ATM CRS Port. The speed of a Peak Cell Rate Service logical connection may not exceed the maximum speed associated with its customer-selected incremental base speed, which includes appropriate overheads. The speed of a Sustained Cell Rate Service logical connection may not exceed 80% of the (T) maximum speed associated with its incremental base speed; e.g., if a customer selects a base speed of 10 Mbps for a Sustained Cell Rate Service logical connection on a 45 Mbps port, the maximum speed for that logical connection may not exceed 80% of 10 Mbps, or 8 Mbps.

The logical connection of an Unspecified Bit Rate Service may not exceed the maximum speed associated with its customer-selected incremental base speed, which includes appropriate overhead. The maximum subscription bandwidth allowed is limited by the number of increments of the base speed selected by the customer. For the 64 kbps service increment, the maximum subscription bandwidth allowed is 23 x 64 kbps, regardless of port speeds. For the 1 Mbps service increment, the maximum subscription bandwidths allowed are: 1 Mbps for the 1.544 Mbps port, 40 Mbps for the 45 Mbps port and 149 Mbps for the 155 Mbps port.

For Peak Cell Rate Service, a single logical connection configuration is also available. A customer may choose a single 40.7 Mbps logical connection on a 45 Mbps port or a single 149 Mbps logical connection on a 155 Mbps port. (T)(M)

Certain material on this page formerly appeared on Pages 8-34 and 8-35.

8. ADVANCED COMMUNICATIONS NETWORKS

8.5 ATM CELL RELAY SERVICE (T)(M)

8.5.1 GENERAL

B. Service Elements (Cont'd) (T)

7. Service Types

ATM CRS logical connections are provided as Peak Cell Rate Service, Sustained Cell Rate Service, or Unspecified Bit Rate Service. The industry standard designation for Peak Cell Rate Service is Service Class A; for Sustained Cell Rate Service it is Service Class C. (M)

Certain material on this page formerly appeared on Page 8-36.

8. ADVANCED COMMUNICATIONS NETWORKS

8.5 ATM CELL RELAY SERVICE (T)(M)

8.5.1 GENERAL

B.7. (Cont'd) (T)

- Peak Cell Rate Service (PCRS)

  PCRS supports VCCs and VPCs carrying a constant flow of information (Constant Bit Rate traffic). The Peak Cell Rate is the customer-selected upper limit for cell traffic on a logical connection, which includes appropriate overheads. When cells exceed the Peak Cell Rate for PCRS logical connections, the cells are discarded upon entry into the ATM CRS Network. The Peak Cell Rate of a PCRS logical connection must be less than the speed of the associated port. (T) (M)

Certain material on this page formerly appeared on Page 8-36.

8. ADVANCED COMMUNICATIONS NETWORKS

8.5 ATM CELL RELAY SERVICE (T)(M)

8.5.1 GENERAL

B.7. (Cont'd) (T)

- Sustained Cell Rate Service (SCRS)

  SCRS supports VCCs carrying information at variable rates (Variable Bit Rate traffic). The Sustained Cell Rate is the average cell rate, including bursts above the average, that can be sustained over an SCRS logical connection. The customer selects the bandwidth characteristics of an SCRS logical connection by choosing the appropriate Sustained Cell Rate, which includes appropriate (T) overheads. A customer may also select maximum burst size levels of 32 cells, 100 cells or 200 cells over a SCRS logical connection at a rate equal to a Peak Cell Rate chosen by the customer, or the port speed when no Peak Cell Rate is chosen. However, the average cell rate transmitted for that logical connection (T) must equal the chosen Sustained Cell Rate. The Peak Cell Rate of an SCRS logical connection may equal, but not exceed, the speed of the associated port. (M)

Certain material on this page formerly appeared on Page 8-36.

8. ADVANCED COMMUNICATIONS NETWORKS

8.5 ATM CELL RELAY SERVICE (T)(M)

8.5.1 GENERAL

B.7. (Cont'd) (T)

- Maximum Burst Size

The Maximum Burst Size (MBS) is the maximum number of cells that can be sent at the Peak Cell Rate on a SCRS connection at one time. Sending a burst at MBS will require the connection to reduce its data rate below the SCR for a fixed period of time before the next burst can be sent. The maximum burst size levels available are: (T)

- 32 Cells - accommodating one Ethernet Frame
- 100 Cells - accommodating one Token Ring Frame
- 200 Cells - accommodating one FDDI Frame

The 32 cell burst size will be assigned unless the customer requests a different level. The MBS of 200 Cells will require the customer to purchase a minimum of 4 Mbps of SCRS service for each VCC. (T) (M)

Certain material on this page formerly appeared on Page 8-37.

8. ADVANCED COMMUNICATIONS NETWORKS

8.5 ATM CELL RELAY SERVICE (T)(M)

8.5.1 GENERAL

B.7. (Cont'd) (T)

- Unspecified Bit Rate Service (UBRS)

  UBRS is a best-effort service designed to support a connection carrying information at variable rates, over VCCs. The UBR Service does not provide traffic related service guarantees, specifically, per-connection bandwidth, cell loss, cell transfer delay and cell delay variation. The Peak Cell Rate, which includes appropriate overheads, is the customer-selected, upper limit of cell traffic on a logical connection. The Peak Cell Rate specifies the highest cell rate that will be allowed on a connection, but not guaranteed. When cells exceed the Peak Cell Rate for UBRS logical connections, the cells are discarded upon entry into the ATM CRS Network. The Peak Cell Rate of a UBRS logical connection may equal, but not exceed, the speed of the associated port. (T) (M)

Certain material on this page formerly appeared on Page 8-37.

8. ADVANCED COMMUNICATIONS NETWORKS

8.5 ATM CELL RELAY SERVICE
8.5.1 GENERAL

B. Service Elements (Cont'd)

8. Cell Transfer

The Cell Transfer service element transfers information between Network Interfaces connected to the ATM CRS network at speed(s) selected by the customer for VCCs or VPCs. The customer must designate whether the Cell Transfer for each logical connection is PCRS, SCRS or UBRS.

The total speed of Cell Transfer elements on a customer's ATM CRS configuration may not exceed the associated Cell Transfer port speed (1.544 Mbps, 45 Mbps or 155 Mbps).

9. Central Office Connecting Channel (COCC)

A COCC provides the ongoing interconnection from the multiplexer or other Company facility port to an ATM CRS port when a customer accesses ATM CRS via a *QWEST DSL HOST* Port or a private line transport facility which requires (T)
multiplexing to be compatible with ATM CRS transmission speeds or requires port-to-port connectivity. A COCC may be used to connect a Stand-Alone Optical Access Link to a private line transport facility. The COCC provides connectivity up to 1.544 Mbps, or up to 45 Mbps or up to 155 Mbps.

8. ADVANCED COMMUNICATIONS NETWORKS

8.5 ATM CELL RELAY SERVICE (T)(M)

8.5.1 GENERAL

B. Service Elements (Cont'd) (T)

10. 45 or 155 Mbps OAL Protection Option

45 or 155 Mbps OAL Protection provides added reliability to ATM CRS transported over fiber optic facilities. This feature provides a separate facility path within the same conduit, cable, sheath, etc. for the protection system between the Serving Wire Center and the network interface. The 45 or 155 Mbps OAL Protection does not provide for diverse facilities into the building. A customer may request that the facilities used to provide ATM CRS be specially routed. The regulations, rates and charges for Special Facilities Routing (i.e., Diversity) are as set forth in Section 11, following. (M)

Certain material on this page formerly appeared on Page 8-38.

8. ADVANCED COMMUNICATIONS NETWORKS

8.5 ATM CELL RELAY SERVICE (T)(M)

8.5.1 GENERAL

B.10. (Cont'd) (T)

This added protection is provided by ensuring that backup electronics and two logically separate facility paths are used in the provisioning of the service. One primary (or working) service path is established between the Serving Wire Center and the customer designated premises. In addition, a protect path is provisioned between the customer designated premises and the Serving Wire Center. In the event that the working facility or electronics fail, or the service performance becomes impaired, i.e., the bit error rate degenerates to less than or equal to 10 to the minus 6, the facility automatically switches to the service protect path in order to maintain a near continuous flow of information between locations.

The offering of 45 or 155 Mbps OAL Protection contemplates the use of existing facilities. Facilities requiring Special Construction will be provided under Tariff F.C.C. No. 2. (M)

Certain material on this page formerly appeared on Page 8-39.

8. ADVANCED COMMUNICATIONS NETWORKS

8.5 ATM CELL RELAY SERVICE (Cont'd) (T)(M)

8.5.2 REGULATIONS

A. General

1. The initial order for ATM CRS must be for a fixed period of 12, 24, 36, 48, 60, 72 or 84 months, as set forth in 8.5.4. At the end of the initial service period, the service may be obtained on a month-to-month basis or for any of the specified fixed service periods. (T)

   If an existing customer, with an existing Fixed Period Service Rate Plan, places a subsequent order to add an Optical Access Link at the same customer premises where fiber facilities are currently available, the new Optical Access Link may be initially ordered as month-to-month. (T)

2. A subsequent order to add ATM CRS Optical Access Links and/or logical connections (VCCs or VPCs) to an existing fixed period service pricing plan must be for a fixed period of 12, 24, 36, 48, 60, 72 or 84 months, or for the remainder of the existing fixed period service pricing plan, provided the remainder of the existing plan is at least the minimum period for that plan, as set forth in 8.5.4.A. If the remaining term is less than the associated minimum period, the minimum term for the added Access Link and/or logical connections shall be the associated minimum period. (T) (T)

3. A customer may access ATM CRS via an Optical Access Link or via Company-provided digital PLTS. A customer utilizing PLTS to access ATM CRS does not incur a nonrecurring charge or monthly rate for an ATM CRS Optical Access Link, but does incur a monthly rate and a nonrecurring charge for a Central Office Connecting Channel and all other monthly rates and nonrecurring charges normally associated with the ordering, installing and provisioning of ATM CRS, as set forth in 8.5.5. (T)(M)

Certain material on this page formerly appeared on Page 8-44.

8. ADVANCED COMMUNICATIONS NETWORKS

8.5 ATM CELL RELAY SERVICE (Cont'd) (T)(M)

8.5.3 RATE ELEMENTS

A. Optical Access Link (OAL)

1. A nonrecurring charge and monthly rate, both based on the speed of the OAL (45 Mbps or 155 Mbps), apply per OAL for each physical connection to the ATM CRS Network. The OAL may be optioned with 45 Mbps or 155 Mbps Protection. (T)

2. In lieu of an Optical Access Link, a Private Line Transport DS1 Service Channel Termination (CT) with Clear Channel Capability, as set forth in Section 7, preceding, is used to provide access to a 1.544 Mbps Cell Transfer. The DS1 Service CT provides access to the ACS ATM CRS Network switch via a connection between customer facilities at the network interface and a Cell Transfer service element. ATM switch locations are designated by the Company and are identified in the National Exchange Carrier Association, Inc. Tariff F.C.C. No. 4. (T)

B. Stand-Alone Optical Access Link (SAOAL)

(T)

A nonrecurring charge and monthly rate, both based on the speed of the SAOAL (45 Mbps or 155 Mbps), apply per SAOAL. The SAOAL may be optioned with 45 Mbps or 155 Mbps Protection.

(M)

Certain material on this page formerly appeared on Page 8-61.

8. ADVANCED COMMUNICATIONS NETWORKS

8.5 ATM CELL RELAY SERVICE (T)(M)
8.5.3 RATE ELEMENTS (Cont'd)

C. Cell Transfer

1. A "First" nonrecurring charge per port applies for the first logical connection (VCC or VPC) on an ATM CRS configuration. An "Each Additional" nonrecurring charge applies for each additional logical connection ordered on the same ATM CRS Port, installed at the same time (same due date) for the same customer of record as the first logical connection. A Cell Transfer fixed nonrecurring charge also applies per port, based on the port speed. A Cell Transfer fixed monthly rate applies, based on the port speed, for each ATM CRS OAL, or Synchronous Service Transport (SST), or DS3 connection to the network supporting ATM CRS. A variable, or incremental, monthly rate applies per port for the total bandwidth of all logical connections, based on the service type (PCRS, SCRS or UBRS) of the connections, the speed of the port and the number of 64 kbps, 75 kbps 1 Mbps, 1.544 Mbps, 1.787 Mbps, 40.7 Mbps or 149 Mbps increments of bandwidth, or fraction thereof, provided on the connections. (T)

2. Bandwidth increments of 75 kbps, 1.787 Mbps, 40.7 Mbps, and 149 Mbps are not available with SCRS. Bandwidth increments of 75 kbps, 1.544 Mbps, 1.787 Mbps, 40.7 Mbps and 149 Mbps are not available with UBRS. (T) (M)

Certain material on this page formerly appeared on Page 8-61.

8. ADVANCED COMMUNICATIONS NETWORKS

8.5 ATM CELL RELAY SERVICE (T)(M)

8.5.3 RATE ELEMENTS

C. Cell Transfer (Cont'd)

3. A SCRS Maximum Burst Size monthly rate applies per VCC based on the cell level of 100 or 200. In addition, the Maximum Burst Size of 200 Cells requires the customer to purchase a minimum of 4 Mbps of SCRS for each VCC. (T)

4. A nonrecurring charge applies for each subsequent order to add or to change logical connections on an existing ATM CRS configuration, in addition to the "First" and "Each Additional" nonrecurring charges for the logical connections in the subsequent order. (T)

5. “First” nonrecurring charge applies for the first logical connection VCC on an LSS/LSS or LSS/ATM CRS configuration. "Each Additional" nonrecurring charge applies for each additional logical connection ordered on the same LSS/LSS or LSS/ATM CRS configuration, installed at the same time (same due date) for the same customer of record as the first logical connection. A nonrecurring charge applies for each subsequent order to add or to change logical connections on an existing LSS/LSS or LSS/ATM CRS configuration, in addition to the "First" and "Each Additional" nonrecurring charges for the logical connections in the subsequent order. (T)

D. Central Office Connecting Channel (COCC) (T)

A nonrecurring charge and a monthly rate apply per COCC, per speed of up to 1.544 Mbps, up to 45 Mbps, or up to 155 Mbps. (M)

Certain material on this page formerly appeared on Page 8-62.

8. ADVANCED COMMUNICATIONS NETWORKS

8.5 ATM CELL RELAY SERVICE (Cont'd) (T)(M)

8.5.4 PRICING PLANS

A. General

ATM CRS must be initially ordered under a Fixed Period Service Rate Plan. The rate plan allows the ATM CRS customer the assurance of no Company-initiated increases in rates during the fixed period. At the end of the initial service period, the service may be obtained on a month-to-month basis or any of the specified fixed period service rate periods. (T)

If an existing customer, with an existing Fixed Period Service Rate Plan, places a subsequent order to add an Optical Access Link at the same customer premises where fiber facilities are currently available, the new Optical Access Link may be initially ordered as month-to-month. (T)

Fixed Period Service Rate Plan (T)

The ATM CRS customer may order this plan for 12, 24, 36, 48, 60, 72, or 84 months at the rates listed in 8.5.5. (T)(M)

Certain material on this page formerly appeared on Page 8-94.

8. ADVANCED COMMUNICATIONS NETWORKS

8.5 ATM CELL RELAY SERVICE (T)(M)
8.5.4 PRICING PLANS (Cont'd)

B. Terms and Conditions (T)

1. Monthly rates for the entire fixed period will be frozen from Company-initiated increases, at the rates in effect for the fixed period on the service date. (T)

2. The customer must specify the length of the fixed period at the time the service is ordered. (T)

3. ATM CRS rate elements may be ordered under any optional rate plan. For example, the customer may order the Access Link under the 36-month fixed period service rate plan and the Cell Transfer under the 60-month fixed period service rate plan. (T) (T)

4. Fixed Period Rate Plans established on or before August 31, 1998, will automatically receive a rate decrease if the Company decreases rates during the term of the plan. Effective September 1, 1998, customers establishing a Fixed Period Rate Plan, will not receive a rate decrease if the Company decreases rates during the term of the plan. (T) (T) (M)

Certain material on this page formerly appeared on Page 8-94.

8. ADVANCED COMMUNICATIONS NETWORKS

8.5 ATM CELL RELAY SERVICE (T)(M)

8.5.4 PRICING PLANS

B. Terms and Conditions (Cont'd)

5. At the end of the fixed period, the customer may select a new fixed period, convert to monthly rates (month-to-month) or terminate the service. The rates will be those in effect at the time the new fixed period begins. Should the customer fail to make a choice by the end of a fixed period, the service will automatically revert to the effective monthly (month-to-month) rates. If service is continued under the pricing plans, nonrecurring charges will not apply. (T)

6. The minimum service period for fixed period service rate plan is 12 months. When VCCs and VPCs are added to an existing ATM CRS, the minimum service period for the added VCCs and VPCs is one month. VCCs and VPCs may be added to an existing fixed period on a month-to-month basis or under the same optional rate plan as the existing ATM CRS but at the rates and charges in effect at the time of the addition. (T)

7. Phased-In Installation will apply to all ATM Cell Relay Service customers whose fixed-period service pricing plan began after April 7, 1998. (T)

   Under Phased-In Installation, monthly rates and nonrecurring charges for all ATM Cell Relay service elements installed during the first 12 months of a multiyear, (T) fixed-period service plan, or installed at anytime during a 1-year, fixed-period (T) service plan, will be those rates and charges which were in effect on the date the first element of the service configuration was installed; unless a decrease in a rate or charge occurs, in which case the lower rate or charge applies. (M)

Certain material on this page formerly appeared on Page 8-95.

8. ADVANCED COMMUNICATIONS NETWORKS

8.5 ATM CELL RELAY SERVICE (T)(M)
8.5.4 PRICING PLANS (Cont'd)

C. Changes to Rate Plans (T)

Services rated under the month-to-month plan or an existing fixed period service rate plan may be upgraded to a fixed period service rate plan at any time the customer chooses without incurring nonrecurring charges or Termination Liability. This upgrade will be allowed provided the channel interface and the customer designated premises remain the same. Additionally, the new fixed period service rate plan must meet or exceed the fixed period service rate plan being upgraded.

The monthly rates will be those in effect at the time the new fixed period begins. New minimum service periods apply to upgrades in rate plans.

If a customer chooses to change an existing service provided under a fixed period service rate plan to a month-to-month plan, the change will be treated as a discontinuance of the existing service and an establishment of new service. Appropriate Termination Liability, as set forth in 8.1.5, and a new minimum period will apply in addition to the new monthly rates for the service. (T)

D. Discontinuance of Service (T)

If the customer chooses to discontinue all or a portion of the service (equaling more than 20% of the total monthly rate) prior to the expiration of the fixed period service, Termination Liability, as set forth in 8.1.5, will apply. A minimum billing level of 80% of the total monthly rates will be used to calculate Termination Liability. The minimum billing level is based on the monthly rate as of the service established date, plus any additions to the service after the service established date. (T) (M)

Certain material on this page formerly appeared on Page 8-96.

8. ADVANCED COMMUNICATIONS NETWORKS

8.5 ATM CELL RELAY SERVICE (Cont'd) (T)(M)

8.5.5 RATES AND CHARGES

A. Monthly

ATM CRS may be ordered as monthly once the initial requirement to order the service as a fixed period service rate plan has been satisfied. (T)

	USOC	NONRECURRING CHARGE	MONTHLY RATE	
1. Optical Access Link, per Access Link				
• 45 Mbps	N7AXM	$ 840.27	$ 710.00	
• 155 Mbps	N7AXM	860.24	1060.00	
• 45 Mbps optioned with protection	N7ARM	1,320.00	1,200.00	
• 155 Mbps optioned with protection	N7ARM	1,380.00	2,800.00	(M)

Certain material on this page formerly appeared on Page 8-252.

8. ADVANCED COMMUNICATIONS NETWORKS

8.5 ATM CELL RELAY SERVICE (T)(M)

8.5.5 RATES AND CHARGES

A. Monthly (Cont'd) (T)

2. Stand-Alone Optical Access Link, per Access Link

• 45 Mbps	N1AXM	$ 840.27	$ 710.00	(T)
• 155 Mbps	N1AXM	860.24	1060.00	
• 45 Mbps optioned with protection	N1ARM	1,320.00	1,200.00	
• 155 Mbps optioned with protection	N1ARM	1,380.00	2,800.00	(M)

Certain material on this page formerly appeared on Page 8-252.

8. ADVANCED COMMUNICATIONS NETWORKS

8.5 ATM CELL RELAY SERVICE (T)(M)
8.5.5 RATES AND CHARGES
A. Monthly (Cont'd) (T)

	USOC	NONRECURRING CHARGE	
3. Cell Transfer			
• First VCC	NR9AV	$150.00	
• Each additional VCC	NR9AW	50.00	(T)
• First VPC	NR9AX	150.00	
• Each additional VPC	NR9AY	50.00	
• Subsequent VCC(s) or VPC order charge, per order[1]	NR9AZ	160.00	(T)

	USOC	NONRECURRING CHARGE	MONTHLY RATE
• Fixed Rate, per Port			
- 1.544 Mbps	C3TXM	$161.45	$280.00
- 45 Mbps	C3TXM	161.45	440.00
- 155 Mbps	C3TXM	161.45	800.00

[1] In addition to the Subsequent VCC(s) or VPC order charge, the First and Each Additional VCC or VPC nonrecurring charges apply, as applicable. (T) (M)

Certain material on this page formerly appeared on Page 8-253.

8. ADVANCED COMMUNICATIONS NETWORKS

8.5 ATM CELL RELAY SERVICE (T)(M)

8.5.5 RATES AND CHARGES

A. Monthly

3. Cell Transfer (Cont'd) (T)

	USOC	MONTHLY RATE
• Peak Cell Rate Service, per 64 kbps Increment of total bandwidth		
- 1.544 Mbps port	CTNBM	$ 2.00
- 45 Mbps port	CTNBM	2.00
- 155 Mbps port	CTNBM	2.00
• Peak Cell Rate Service, per 75 kbps Increment of total bandwidth		
- 1.544 Mbps port	CTNJM	2.30
- 45 Mbps port	CTNJM	2.30
- 155 Mbps port	CTNJM	2.30

(M)

Certain material on this page formerly appeared on Page 8-254.

8. ADVANCED COMMUNICATIONS NETWORKS

8.5 ATM CELL RELAY SERVICE (T)(M)

8.5.5 RATES AND CHARGES

A. Monthly

3. Cell Transfer (Cont'd) (T)

	USOC	MONTHLY RATE	
• Peak Cell Rate Service, per 1 Mbps Increment of total bandwidth			
- 1.544 Mbps port	CTNAM	$30.00	(T)
- 45 Mbps port	CTNAM	30.00	
- 155 Mbps port	CTNAM	30.00	
• Peak Cell Rate Service, per 1.544 Mbps Increment of total bandwidth			
- 45 Mbps port	CTNDM	40.00	(T)
- 155 Mbps port	CTNDM	40.00	(M)

Certain material on this page formerly appeared on Pages 8-254 and 8-255.

8. ADVANCED COMMUNICATIONS NETWORKS

8.5 ATM CELL RELAY SERVICE (T)(M)

8.5.5 RATES AND CHARGES

A. Monthly

3. Cell Transfer (Cont'd) (T)

	USOC	MONTHLY RATE	
• Peak Cell Rate Service, per 1.787 Mbps Increment of total bandwidth			
- 45 Mbps port	CTNKM	$ 46.50	(T)
- 155 Mbps port	CTNKM	46.50	
• Peak Cell Rate Service, per 40.7 Mbps Increment of total bandwidth			
- 45 Mbps port	CTNGM	1,050.00	
- 155 Mbps port	CTNGM	1,050.00	

(M)

Certain material on this page formerly appeared on Page 8-255.

8. ADVANCED COMMUNICATIONS NETWORKS

8.5 ATM CELL RELAY SERVICE (T)(M)

8.5.5 RATES AND CHARGES

A. Monthly

3. Cell Transfer (Cont'd) (T)

	USOC	MONTHLY RATE	
• Peak Cell Rate Service, per 149 Mbps Increment of total bandwidth			
- 155 Mbps port	CTNHM	$3,800.00	(T)(M)

Certain material on this page formerly appeared on Page 8-255.

8. ADVANCED COMMUNICATIONS NETWORKS

8.5 ATM CELL RELAY SERVICE (T)(M)

8.5.5 RATES AND CHARGES

A. Monthly

3. Cell Transfer (Cont'd) (T)

	USOC	MONTHLY RATE	
• Sustained Cell Rate Service, per 64 kbps Increment of total bandwidth			
- 1.544 Mbps port	CTNEM	$ 2.50	(T)
- 45 Mbps port	CTNEM	2.50	
- 155 Mbps port	CTNEM	2.50	
• Sustained Cell Rate Service, per 1 Mbps Increment of total bandwidth			
- 1.544 Mbps port	CTNCM	37.50	
- 45 Mbps port	CTNCM	37.50	
- 155 Mbps port	CTNCM	37.50	(M)

Certain material on this page formerly appeared on Page 8-255.

8. ADVANCED COMMUNICATIONS NETWORKS

8.5 ATM CELL RELAY SERVICE (T)(M)

8.5.5 RATES AND CHARGES

A. Monthly

3. Cell Transfer (Cont'd) (T)

	USOC	MONTHLY RATE
• Sustained Cell Rate Service, per 1.544 Mbps Increment of total bandwidth		
- 45 Mbps port	CTNFM	$ 45.00
- 155 Mbps port	CTNFM	45.00
• Sustained Cell Rate Service, Maximum Burst Size, per VCC		
- 32 Cells	CTSAM	–
- 100 Cells[1]	CTSBM	100.00
- 200 Cells[1]	CTSCM	200.00

[1] The Maximum Burst Size of 200 Cells requires the customer to purchase a minimum of 4 Mbps of Sustained Cell Rate Service for each VCC. (M)

Certain material on this page formerly appeared on Page 8-256.

8. ADVANCED COMMUNICATIONS NETWORKS

8.5 ATM CELL RELAY SERVICE (T)(M)

8.5.5 RATES AND CHARGES

A. Monthly

3. Cell Transfer (Cont'd) (T)

	USOC	MONTHLY RATE	
• Unspecified Bit Rate Service, per 64 kbps Increment of total bandwidth			
- 1.544 Mbps port	CTUEM	$ 0.80	(T)
- 45 Mbps port	CTUEM	0.80	
- 155 Mbps port	CTUEM	0.80	
• Unspecified Bit Rate Service, per 1 Mbps Increment of total bandwidth			
- 1.544 Mbps port	CTUCM	12.00	
- 45 Mbps port	CTUCM	12.00	
- 155 Mbps port	CTUCM	12.00	(M)

Certain material on this page formerly appeared on Page 8-256.

8. ADVANCED COMMUNICATIONS NETWORKS

8.5 ATM CELL RELAY SERVICE (T)(M)
8.5.5 RATES AND CHARGES (T)

A. Monthly (Cont'd) (T)

	USOC	NONRECURRING CHARGE	MONTHLY RATE	
4. Central Office Connecting Channel (COCC), per COCC				
- Up to 1.544 Mbps	CFNXM	$25.00	$ 0.65	
- Up to 45 or 155 Mbps	CFNXM	30.00	12.50	(M)

Certain material on this page formerly appeared on Page 8-256.

8. ADVANCED COMMUNICATIONS NETWORKS

8.5 ATM CELL RELAY SERVICE (T)(M)
8.5.5 RATES AND CHARGES(Cont'd) (T)

B. 12 Months

	USOC	NONRECURRING CHARGE	MONTHLY RATE	
1. Optical Access Link, per Access Link				
• 45 Mbps	N7AX1	$ 840.27	$ 674.50	
• 155 Mbps	N7AX1	860.24	1007.00	
• 45 Mbps optioned with protection	N7AR1	1,320.00	1,140.00	
• 155 Mbps optioned with protection	N7AR1	1,380.00	2,660.00	(M)

Certain material on this page formerly appeared on Page 8-257.

8. ADVANCED COMMUNICATIONS NETWORKS

8.5 ATM CELL RELAY SERVICE (T)(M)
8.5.5 RATES AND CHARGES (T)

B. 12 Months (Cont'd) (T)

	USOC	NONRECURRING CHARGE	MONTHLY RATE	
2. Stand-Alone Optical Access Link, per Access Link				
• 45 Mbps	N1AX1	840.27	$ 674.50	(T)
• 155 Mbps	N1AX1	860.24	1,007.00	(T)
• 45 Mbps optioned with protection	N1AR1	1,320.00	1,140.00	
• 155 Mbps optioned with protection	N1AR1	1,380.00	2,660.00	(M)

Certain material on this page formerly appeared on Page 8-257.

8. ADVANCED COMMUNICATIONS NETWORKS

8.5 ATM CELL RELAY SERVICE (T)(M)
8.5.5 RATES AND CHARGES (T)

B. 12 Months (Cont'd)

	USOC	NONRECURRING CHARGE
3. Cell Transfer		
• First VCC	NR9AV	$150.00
• Each additional VCC	NR9AW	50.00
• First VPC	NR9AX	150.00
• Each additional VPC	NR9AY	50.00
• Subsequent VCC(s) or VPC order charge, per order[1]	NR9AZ	160.00

	USOC	NONRECURRING CHARGE	MONTHLY RATE
• Fixed Rate, per Port			
- 1.544 Mbps	C3TX1	$161.45	$266.00
- 45 Mbps	C3TX1	161.45	418.00
- 155 Mbps	C3TX1	161.45	760.00

[1] In addition to the Subsequent VCC(s) or VPC order charge, the First and Each Additional VCC or VPC nonrecurring charges apply, as applicable. (M)

Certain material on this page formerly appeared on Page 8-258.

8. ADVANCED COMMUNICATIONS NETWORKS

8.5 ATM CELL RELAY SERVICE (T)(M)

8.5.5 RATES AND CHARGES

B. 12 Months

3. Cell Transfer (Cont'd) (T)

	USOC	MONTHLY RATE
• Peak Cell Rate Service, per 64 kbps Increment of total bandwidth		
- 1.544 Mbps port	CTNB1	$ 1.90
- 45 Mbps port	CTNB1	1.90
- 155 Mbps port	CTNB1	1.90
• Peak Cell Rate Service, per 75 kbps Increment of total bandwidth		
- 1.544 Mbps port	CTNJ1	2.19
- 45 Mbps port	CTNJ1	2.19
- 155 Mbps port	CTNJ1	2.19

(M)

Certain material on this page formerly appeared on Page 8-259.

8. ADVANCED COMMUNICATIONS NETWORKS

8.5 ATM CELL RELAY SERVICE (T)(M)

8.5.5 RATES AND CHARGES

B. 12 Months

3. Cell Transfer (Cont'd) (T)

	USOC	MONTHLY RATE	
• Peak Cell Rate Service, per 1 Mbps Increment of total bandwidth			
- 1.544 Mbps port	CTNA1	$28.50	(T)
- 45 Mbps port	CTNA1	28.50	
- 155 Mbps port	CTNA1	28.50	
• Peak Cell Rate Service, per 1.544 Mbps Increment of total bandwidth			
- 45 Mbps port	CTND1	38.00	(T)
- 155 Mbps port	CTND1	38.00	(M)

Certain material on this page formerly appeared on Pages 8-259 and 8-260.

8. ADVANCED COMMUNICATIONS NETWORKS

8.5 ATM CELL RELAY SERVICE (T)(M)

8.5.5 RATES AND CHARGES

B. 12 Months

3. Cell Transfer (Cont'd) (T)

	USOC	MONTHLY RATE	
• Peak Cell Rate Service, per 1.787 Mbps Increment of total bandwidth			
- 45 Mbps port	CTNK1	$ 44.18	(T)
- 155 Mbps port	CTNK1	44.18	
• Peak Cell Rate Service, per 40.7 Mbps Increment of total bandwidth			
- 45 Mbps port	CTNG1	997.50	
- 155 Mbps port	CTNG1	997.50	(M)

Certain material on this page formerly appeared on Page 8-260.

8. ADVANCED COMMUNICATIONS NETWORKS

8.5 ATM CELL RELAY SERVICE (T)(M)

8.5.5 RATES AND CHARGES

B. 12 Months

3. Cell Transfer (Cont'd) (T)

	USOC	MONTHLY RATE	
• Peak Cell Rate Service, per 149 Mbps Increment of total bandwidth			
- 155 Mbps port	CTNH1	$3,610.00	(T)(M)

Certain material on this page formerly appeared on Page 8-260.

8. ADVANCED COMMUNICATIONS NETWORKS

8.5 ATM CELL RELAY SERVICE (T)(M)

8.5.5 RATES AND CHARGES

B. 12 Months

3. Cell Transfer (Cont'd) (T)

	USOC	MONTHLY RATE	
• Sustained Cell Rate Service, per 64 kbps Increment of total bandwidth			
- 1.544 Mbps port	CTNE1	$ 2.38	(T)
- 45 Mbps port	CTNE1	2.38	
- 155 Mbps port	CTNE1	2.38	
• Sustained Cell Rate Service, per 1 Mbps Increment of total bandwidth			
- 1.544 Mbps port	CTNC1	35.63	
- 45 Mbps port	CTNC1	35.63	
- 155 Mbps port	CTNC1	35.63	(M)

Certain material on this page formerly appeared on Page 8-260.

8. ADVANCED COMMUNICATIONS NETWORKS

8.5 ATM CELL RELAY SERVICE (T)(M)

8.5.5 RATES AND CHARGES

B. 12 Months

3. Cell Transfer (Cont'd) (T)

	USOC	MONTHLY RATE	
• Sustained Cell Rate Service, per 1.544 Mbps Increment of total bandwidth			
- 45 Mbps port	CTNF1	$ 42.75	(T)
- 155 Mbps port	CTNF1	42.75	
• Sustained Cell Rate Service, Maximum Burst Size, per VCC			
- 32 Cells	CTSA1	–	
- 100 Cells[1]	CTSB1	95.00	
- 200 Cells[1]	CTSC1	190.00	

[1] The Maximum Burst Size of 200 Cells requires the customer to purchase a minimum of 4 Mbps of Sustained Cell Rate Service for each VCC. (M)

Certain material on this page formerly appeared on Pages 8-261.

8. ADVANCED COMMUNICATIONS NETWORKS

8.5 ATM CELL RELAY SERVICE (T)(M)

8.5.5 RATES AND CHARGES

B. 12 Months

3. Cell Transfer (Cont'd) (T)

	USOC	MONTHLY RATE	
• Unspecified Bit Rate Service, per 64 kbps Increment of total bandwidth			
- 1.544 Mbps port	CTUE1	$ 0.76	(T)
- 45 Mbps port	CTUE1	0.76	
- 155 Mbps port	CTUE1	0.76	
• Unspecified Bit Rate Service, per 1 Mbps Increment of total bandwidth			
- 1.544 Mbps port	CTUC1	11.40	
- 45 Mbps port	CTUC1	11.40	
- 155 Mbps port	CTUC1	11.40	(M)

Certain material on this page formerly appeared on Page 8-261.

8. ADVANCED COMMUNICATIONS NETWORKS

8.5 ATM CELL RELAY SERVICE (T)(M)
8.5.5 RATES AND CHARGES
B. 12 Months (Cont'd) (T)

	USOC	NONRECURRING CHARGE	MONTHLY RATE	
4. Central Office Connecting Channel (COCC), per COCC				
- Up to 1.544 Mbps	CFNX1	$25.00	$ 0.62	(T)
- Up to 45 or 155 Mbps	CFNX1	30.00	11.88	(M)

Certain material on this page formerly appeared on Page 8-261.

8. ADVANCED COMMUNICATIONS NETWORKS

8.5 ATM CELL RELAY SERVICE (T)(M)
8.5.5 RATES AND CHARGES (Cont'd) (T)

C. 24 Months

	USOC	NONRECURRING CHARGE	MONTHLY RATE	
1. Optical Access Link, per Access Link				
• 45 Mbps	N7AX2	$ 840.27	$ 665.63	
• 155 Mbps	N7AX2	860.24	993.75	
• 45 Mbps optioned with protection	N7AR2	1,320.00	1,125.00	
• 155 Mbps optioned with protection	N7AR2	1,380.00	2,625.00	(M)

Certain material on this page formerly appeared on Page 8-262.

8. ADVANCED COMMUNICATIONS NETWORKS

8.5 ATM CELL RELAY SERVICE (T)(M)
8.5.5 RATES AND CHARGES (T)

C. 24 Months (Cont'd) (T)

	USOC	NONRECURRING CHARGE	MONTHLY RATE	
2. Stand-Alone Optical Access Link, per Access Link				
• 45 Mbps	N1AX2	$ 840.27	$ 665.63	(T)
• 155 Mbps	N1AX2	860.24	993.75	
• 45 Mbps optioned with protection	N1AR2	1,320.00	1,125.00	
• 155 Mbps optioned with protection	N1AR2	1,380.00	2,625.00	(M)

Certain material on this page formerly appeared on Page 8-262.

8. ADVANCED COMMUNICATIONS NETWORKS

8.5 ATM CELL RELAY SERVICE (T)(M)
8.5.5 RATES AND CHARGES (T)

C. 24 Months (Cont'd)

	USOC	NONRECURRING CHARGE
3. Cell Transfer		
• First VCC	NR9AV	$150.00
• Each additional VCC	NR9AW	50.00
• First VPC	NR9AX	150.00
• Each additional VPC	NR9AY	50.00
• Subsequent VCC(s) or VPC order charge, per order[1]	NR9AZ	160.00

	USOC	NONRECURRING CHARGE	MONTHLY RATE
• Fixed Rate, per Port			
- 1.544 Mbps	C3TX2	$161.45	$262.50
- 45 Mbps	C3TX2	161.45	412.50
- 155 Mbps	C3TX2	161.45	750.00

[1] In addition to the Subsequent VCC(s) or VPC order charge, the First and Each Additional VCC or VPC nonrecurring charges apply, as applicable. (M)

Certain material on this page formerly appeared on Page 8-263.

8. ADVANCED COMMUNICATIONS NETWORKS

8.5 ATM CELL RELAY SERVICE (T)(M)

8.5.5 RATES AND CHARGES

C. 24 Months

3. Cell Transfer (Cont'd) (T)

	USOC	MONTHLY RATE
• Peak Cell Rate Service, per 64 kbps Increment of total bandwidth		
- 1.544 Mbps port	CTNB2	$1.88
- 45 Mbps port	CTNB2	1.88
- 155 Mbps port	CTNB2	1.88
• Peak Cell Rate Service, per 75 kbps Increment of total bandwidth		
- 1.544 Mbps port	CTNJ2	2.16
- 45 Mbps port	CTNJ2	2.16
- 155 Mbps port	CTNJ2	2.16

(M)

Certain material on this page formerly appeared on Page 8-264.

8. ADVANCED COMMUNICATIONS NETWORKS

8.5 ATM CELL RELAY SERVICE (T)(M)

8.5.5 RATES AND CHARGES

C. 24 Months

3. Cell Transfer (Cont'd) (T)

	USOC	MONTHLY RATE	
• Peak Cell Rate Service, per 1 Mbps Increment of total bandwidth			
- 1.544 Mbps port	CTNA2	$28.13	(T)
- 45 Mbps port	CTNA2	28.13	
- 155 Mbps port	CTNA2	28.13	
• Peak Cell Rate Service, per 1.544 Mbps Increment of total bandwidth			
- 45 Mbps port	CTND2	37.50	(T)
- 155 Mbps port	CTND2	37.50	(M)

Certain material on this page formerly appeared on Pages 8-264 and 8-265.

8. ADVANCED COMMUNICATIONS NETWORKS

8.5 ATM CELL RELAY SERVICE (T)(M)

8.5.5 RATES AND CHARGES

C. 24 Months

3. Cell Transfer (Cont'd) (T)

	USOC	MONTHLY RATE	
• Peak Cell Rate Service, per 1.787 Mbps Increment of total bandwidth			
- 45 Mbps port	CTNK2	$ 43.59	(T)
- 155 Mbps port	CTNK2	43.59	
• Peak Cell Rate Service, per 40.7 Mbps Increment of total bandwidth			
- 45 Mbps port	CTNG2	984.38	
- 155 Mbps port	CTNG2	984.38	(M)

Certain material on this page formerly appeared on Page 8-265.

8. ADVANCED COMMUNICATIONS NETWORKS

8.5 ATM CELL RELAY SERVICE (T)(M)

8.5.5 RATES AND CHARGES

C. 24 Months

3. Cell Transfer (Cont'd) (T)

	USOC	MONTHLY RATE	
• Peak Cell Rate Service, per 149 Mbps Increment of total bandwidth			
- 155 Mbps port	CTNH2	$3,562.50	(T)(M)

Certain material on this page formerly appeared on Page 8-265.

8. ADVANCED COMMUNICATIONS NETWORKS

8.5 ATM CELL RELAY SERVICE (T)(M)

8.5.5 RATES AND CHARGES

C. 24 Months

3. Cell Transfer (Cont'd) (T)

	USOC	MONTHLY RATE	
• Sustained Cell Rate Service, per 64 kbps Increment of total bandwidth			
- 1.544 Mbps port	CTNE2	$2.34	(T)
- 45 Mbps port	CTNE2	2.34	
- 155 Mbps port	CTNE2	2.34	
• Sustained Cell Rate Service, per 1 Mbps Increment of total bandwidth			
- 1.544 Mbps port	CTNC2	35.16	
- 45 Mbps port	CTNC2	35.16	
- 155 Mbps port	CTNC2	35.16	(M)

Certain material on this page formerly appeared on Page 8-265.

8. ADVANCED COMMUNICATIONS NETWORKS

8.5 ATM CELL RELAY SERVICE (T)(M)

8.5.5 RATES AND CHARGES

C. 24 Months

3. Cell Transfer (Cont'd) (T)

	USOC	MONTHLY RATE	
• Sustained Cell Rate Service, per 1.544 Mbps Increment of total bandwidth			
- 45 Mbps port	CTNF2	$ 42.19	(T)
- 155 Mbps port	CTNF2	42.19	
• Sustained Cell Rate Service, Maximum Burst Size, per VCC			
- 32 Cells	CTSA2	–	
- 100 Cells[1]	CTSB2	93.75	
- 200 Cells[1]	CTSC2	187.50	

[1] The Maximum Burst Size of 200 Cells requires the customer to purchase a minimum of 4 Mbps of Sustained Cell Rate Service for each VCC. (M)

Certain material on this page formerly appeared on Page 8-266.

8. ADVANCED COMMUNICATIONS NETWORKS

8.5 ATM CELL RELAY SERVICE (T)(M)

8.5.5 RATES AND CHARGES

C. 24 Months

3. Cell Transfer (Cont'd) (T)

	USOC	MONTHLY RATE	
• Unspecified Bit Rate Service, per 64 kbps Increment of total bandwidth			
- 1.544 Mbps port	CTUE2	$ 0.75	(T)
- 45 Mbps port	CTUE2	0.75	
- 155 Mbps port	CTUE2	0.75	
• Unspecified Bit Rate Service, per 1 Mbps Increment of total bandwidth			
- 1.544 Mbps port	CTUC2	11.25	
- 45 Mbps port	CTUC2	11.25	
- 155 Mbps port	CTUC2	11.25	(M)

Certain material on this page formerly appeared on Page 8-266.

8. ADVANCED COMMUNICATIONS NETWORKS

8.5 ATM CELL RELAY SERVICE (T)(M)

8.5.5 RATES AND CHARGES

C. 24 Months

3. Cell Transfer (Cont'd) (T)

	USOC	NONRECURRING CHARGE	MONTHLY RATE	
4. Central Office Connecting Channel (COCC), per COCC				
- Up to 1.544 Mbps	CFNX2	$25.00	$ 0.61	
- Up to 45 or 155 Mbps	CFNX2	30.00	11.72	(M)

Certain material on this page formerly appeared on Page 8-266.

8. ADVANCED COMMUNICATIONS NETWORKS

8.5 ATM CELL RELAY SERVICE (T)(M)
8.5.5 RATES AND CHARGES (Cont'd) (T)

D. 36 Months

	USOC	NONRECURRING CHARGE	MONTHLY RATE
1. Optical Access Link, per Access Link			
• 45 Mbps	N7AX3	$ 840.27	$ 656.75
• 155 Mbps	N7AX3	860.24	980.50
• 45 Mbps optioned with protection	N7AR3	1,320.00	1,110.00
• 155 Mbps optioned with protection	N7AR3	1,380.00	2,590.00

(M)

Certain material on this page formerly appeared on Page 8-267.

8. ADVANCED COMMUNICATIONS NETWORKS

8.5 ATM CELL RELAY SERVICE (T)(M)
8.5.5 RATES AND CHARGES (Cont'd) (T)

D. 36 Months

	USOC	NONRECURRING CHARGE	MONTHLY RATE	
2. Stand-Alone Optical Access Link, per Access Link				
• 45 Mbps	N1AX3	840.27	$ 656.75	(T)
• 155 Mbps	N1AX3	860.24	980.50	
• 45 Mbps optioned with protection	N1AR3	1,320.00	1,110.00	
• 155 Mbps optioned with protection	N1AR3	1,380.00	2,590.00	(M)

Certain material on this page formerly appeared on Page 8-267.

8. ADVANCED COMMUNICATIONS NETWORKS

8.5 ATM CELL RELAY SERVICE (T)(M)
8.5.5 RATES AND CHARGES
D. 36 Months (Cont'd) (T)

	USOC	NONRECURRING CHARGE
3. Cell Transfer		
• First VCC	NR9AV	$150.00
• Each additional VCC	NR9AW	50.00
• First VPC	NR9AX	150.00
• Each additional VPC	NR9AY	50.00
• Subsequent VCC(s) or VPC order charge, per order[1]	NR9AZ	160.00

[1] In addition to the Subsequent VCC(s) or VPC order charge, the First and Each Additional VCC or VPC nonrecurring charges apply, as applicable. (M)

Certain material on this page formerly appeared on Page 8-268.

8. ADVANCED COMMUNICATIONS NETWORKS

8.5 ATM CELL RELAY SERVICE (T)(M)

8.5.5 RATES AND CHARGES

D. 36 Months

3. Cell Transfer (Cont'd) (T)

	USOC	NONRECURRING CHARGE	MONTHLY RATE	
• Fixed Rate, per Port				
- 1.544 Mbps	C3TX3	$161.45	$259.00	
- 45 Mbps	C3TX3	161.45	407.00	
- 155 Mbps	C3TX3	161.45	740.00	(M)

Certain material on this page formerly appeared on Page 8-268.

8. ADVANCED COMMUNICATIONS NETWORKS

8.5 ATM CELL RELAY SERVICE (T)(M)

8.5.5 RATES AND CHARGES

D. 36 Months

3. Cell Transfer (Cont'd) (T)

	USOC	MONTHLY RATE
• Peak Cell Rate Service, per 64 kbps Increment of total bandwidth		
- 1.544 Mbps port	CTNB3	$ 1.85
- 45 Mbps port	CTNB3	1.85
- 155 Mbps port	CTNB3	1.85
• Peak Cell Rate Service, per 75 kbps Increment of total bandwidth		
- 1.544 Mbps port	CTNJ3	2.13
- 45 Mbps port	CTNJ3	2.13
- 155 Mbps port	CTNJ3	2.13

(M)

Certain material on this page formerly appeared on Page 8-269.

8. ADVANCED COMMUNICATIONS NETWORKS

8.5 ATM CELL RELAY SERVICE (T)(M)

8.5.5 RATES AND CHARGES

D. 36 Months

3. Cell Transfer (Cont'd) (T)

	USOC	MONTHLY RATE	
• Peak Cell Rate Service, per 1 Mbps Increment of total bandwidth			
- 1.544 Mbps port	CTNA3	$27.75	(T)
- 45 Mbps port	CTNA3	27.75	
- 155 Mbps port	CTNA3	27.75	
• Peak Cell Rate Service, per 1.544 Mbps Increment of total bandwidth			
- 45 Mbps port	CTND3	37.00	(T)
- 155 Mbps port	CTND3	37.00	(M)

Certain material on this page formerly appeared on Pages 8-269 and 8-270.

8. ADVANCED COMMUNICATIONS NETWORKS

8.5 ATM CELL RELAY SERVICE (T)(M)

8.5.5 RATES AND CHARGES

D. 36 Months

3. Cell Transfer (Cont'd) (T)

	USOC	MONTHLY RATE	
• Peak Cell Rate Service, per 1.787 Mbps Increment of total bandwidth			
- 45 Mbps port	CTNK3	$43.01	(T)
- 155 Mbps port	CTNK3	43.01	
• Peak Cell Rate Service, per 40.7 Mbps Increment of total bandwidth			
- 45 Mbps port	CTNG3	971.25	
- 155 Mbps port	CTNG3	971.25	(M)

Certain material on this page formerly appeared on Page 8-270.

8. ADVANCED COMMUNICATIONS NETWORKS

8.5 ATM CELL RELAY SERVICE (T)(M)

8.5.5 RATES AND CHARGES

D. 36 Months

3. Cell Transfer (Cont'd) (T)

	USOC	MONTHLY RATE	
• Peak Cell Rate Service, per 149 Mbps Increment of total bandwidth			
- 155 Mbps port	CTNH3	$3,515.00	(T)(M)

Certain material on this page formerly appeared on Page 8-270.

8. ADVANCED COMMUNICATIONS NETWORKS

8.5 ATM CELL RELAY SERVICE (T)(M)

8.5.5 RATES AND CHARGES

D. 36 Months

3. Cell Transfer (Cont'd) (T)

	USOC	MONTHLY RATE	
• Sustained Cell Rate Service, per 64 kbps Increment of total bandwidth			
- 1.544 Mbps port	CTNE3	$ 2.31	(T)
- 45 Mbps port	CTNE3	2.31	
- 155 Mbps port	CTNE3	2.31	
• Sustained Cell Rate Service, per 1 Mbps Increment of total bandwidth			
- 1.544 Mbps port	CTNC3	34.69	
- 45 Mbps port	CTNC3	34.69	
- 155 Mbps port	CTNC3	34.69	(M)

Certain material on this page formerly appeared on Page 8-270.

8. ADVANCED COMMUNICATIONS NETWORKS

8.5 ATM CELL RELAY SERVICE (T)(M)

8.5.5 RATES AND CHARGES

D. 36 Months

3. Cell Transfer (Cont'd) (T)

	USOC	MONTHLY RATE
• Sustained Cell Rate Service, per 1.544 Mbps Increment of total bandwidth		
- 45 Mbps port	CTNF3	$ 41.63
- 155 Mbps port	CTNF3	41.63
• Sustained Cell Rate Service, Maximum Burst Size, per VCC		
- 32 Cells	CTSA3	–
- 100 Cells[1]	CTSB3	92.50
- 200 Cells[1]	CTSC3	185.00

[1] The Maximum Burst Size of 200 Cells requires the customer to purchase a minimum of 4 Mbps of Sustained Cell Rate Service for each VCC. (M)

Certain material on this page formerly appeared on Page 8-271.

8. ADVANCED COMMUNICATIONS NETWORKS

8.5 ATM CELL RELAY SERVICE (T)(M)

8.5.5 RATES AND CHARGES

D. 36 Months

3. Cell Transfer (Cont'd) (T)

	USOC	MONTHLY RATE	
• Unspecified Bit Rate Service, per 64 kbps Increment of total bandwidth			
- 1.544 Mbps port	CTUE3	$ 0.74	(T)
- 45 Mbps port	CTUE3	0.74	
- 155 Mbps port	CTUE3	0.74	
• Unspecified Bit Rate Service, per 1 Mbps Increment of total bandwidth			
- 1.544 Mbps port	CTUC3	11.10	
- 45 Mbps port	CTUC3	11.10	
- 155 Mbps port	CTUC3	11.10	(M)

Certain material on this page formerly appeared on Page 8-271.

8. ADVANCED COMMUNICATIONS NETWORKS

8.5 ATM CELL RELAY SERVICE (T)(M)
8.5.5 RATES AND CHARGES (T)

D. 36 Months (Cont'd)

	USOC	NONRECURRING CHARGE	MONTHLY RATE	
4. Central Office Connecting Channel (COCC), per COCC				
- Up to 1.544 Mbps	CFNX3	$25.00	$ 0.60	
- Up to 44.736 Mbps	CFNX3	30.00	11.56	(M)

Certain material on this page formerly appeared on Page 8-271.

8. ADVANCED COMMUNICATIONS NETWORKS

8.5 ATM CELL RELAY SERVICE (T)(M)
8.5.5 RATES AND CHARGES (Cont'd) (T)

E. 48 Months

	USOC	NONRECURRING CHARGE	MONTHLY RATE
1. Optical Access Link, per Access Link			
• 45 Mbps	N7AX4	$ 840.27	$ 647.88
• 155 Mbps	N7AX4	860.24	967.25
• 45 Mbps optioned with protection	N7AR4	1,320.00	1,095.00
• 155 Mbps optioned with protection	N7AR4	1,380.00	2,555.00

(M)

Certain material on this page formerly appeared on Page 8-272.

8. ADVANCED COMMUNICATIONS NETWORKS

8.5 ATM CELL RELAY SERVICE (T)(M)
8.5.5 RATES AND CHARGES (T)

E. 48 Months (Cont'd)

	USOC	NONRECURRING CHARGE	MONTHLY RATE	
2. Stand-Alone Optical Access Link, per Access Link				
• 45 Mbps	N1AX4	840.27	$ 647.88	(T)
• 155 Mbps	N1AX4	860.24	967.25	
• 45 Mbps optioned with protection	N1AR4	1,320.00	1,095.00	
• 155 Mbps optioned with protection	N1AR4	1,380.00	2,555.00	(M)

Certain material on this page formerly appeared on Page 8-272.

8. ADVANCED COMMUNICATIONS NETWORKS

8.5 ATM CELL RELAY SERVICE (T)(M)
8.5.5 RATES AND CHARGES (T)

E. 48 Months (Cont'd)

	USOC	NONRECURRING CHARGE
3. Cell Transfer		
• First VCC	NR9AV	$150.00
• Each additional VCC	NR9AW	50.00
• First VPC	NR9AX	150.00
• Each additional VPC	NR9AY	50.00
• Subsequent VCC(s) or VPC order charge, per order[1]	NR9AZ	160.00

	USOC	NONRECURRING CHARGE	MONTHLY RATE
• Fixed Rate, per Port			
- 1.544 Mbps	C3TX4	$161.45	$255.50
- 45 Mbps	C3TX4	161.45	401.50
- 155 Mbps	C3TX4	161.45	730.00

[1] In addition to the Subsequent VCC(s) or VPC order charge, the First and Each Additional VCC or VPC nonrecurring charges apply, as applicable. (M)

Certain material on this page formerly appeared on Page 8-273.

8. ADVANCED COMMUNICATIONS NETWORKS

8.5 ATM CELL RELAY SERVICE (T)(M)

8.5.5 RATES AND CHARGES

E. 48 Months

3. Cell Transfer (Cont'd) (T)

	USOC	MONTHLY RATE
• Peak Cell Rate Service, per 64 kbps Increment of total bandwidth		
- 1.544 Mbps port	CTNB4	$ 1.83
- 45 Mbps port	CTNB4	1.83
- 155 Mbps port	CTNB4	1.83
• Peak Cell Rate Service, per 75 kbps Increment of total bandwidth		
- 1.544 Mbps port	CTNJ4	2.10
- 45 Mbps port	CTNJ4	2.10
- 155 Mbps port	CTNJ4	2.10

(M)

Certain material on this page formerly appeared on Page 8-274.

8. ADVANCED COMMUNICATIONS NETWORKS

8.5 ATM CELL RELAY SERVICE (T)(M)

8.5.5 RATES AND CHARGES

E. 48 Months

3. Cell Transfer (Cont'd) (T)

	USOC	MONTHLY RATE	
• Peak Cell Rate Service, per 1 Mbps Increment of total bandwidth			
- 1.544 Mbps port	CTNA4	$27.38	(T)
- 45 Mbps port	CTNA4	27.38	
- 155 Mbps port	CTNA4	27.38	
• Peak Cell Rate Service, per 1.544 Mbps Increment of total bandwidth			
- 45 Mbps port	CTND4	36.50	(T)
- 155 Mbps port	CTND4	36.50	(M)

Certain material on this page formerly appeared on Pages 8-274 and 8-275.

8. ADVANCED COMMUNICATIONS NETWORKS

8.5 ATM CELL RELAY SERVICE (T)(M)

8.5.5 RATES AND CHARGES

E. 48 Months

3. Cell Transfer (Cont'd) (T)

	USOC	MONTHLY RATE	
• Peak Cell Rate Service, per 1.787 Mbps Increment of total bandwidth			
- 45 Mbps port	CTNK4	$ 42.43	(T)
- 155 Mbps port	CTNK4	42.43	
• Peak Cell Rate Service, per 40.7 Mbps Increment of total bandwidth			
- 45 Mbps port	CTNG4	958.13	
- 155 Mbps port	CTNG4	958.13	(M)

Certain material on this page formerly appeared on Page 8-275.

8. ADVANCED COMMUNICATIONS NETWORKS

8.5 ATM CELL RELAY SERVICE (T)(M)

8.5.5 RATES AND CHARGES

E. 48 Months

3. Cell Transfer (Cont'd) (T)

	USOC	MONTHLY RATE	
• Peak Cell Rate Service, per 149 Mbps Increment of total bandwidth			
- 155 Mbps port	CTNH4	$3,467.50	(T)(M)

Certain material on this page formerly appeared on Page 8-275.

8. ADVANCED COMMUNICATIONS NETWORKS

8.5 ATM CELL RELAY SERVICE (T)(M)

8.5.5 RATES AND CHARGES

E. 48 Months

3. Cell Transfer (Cont'd) (T)

	USOC	MONTHLY RATE	
• Sustained Cell Rate Service, per 64 kbps Increment of total bandwidth			
- 1.544 Mbps port	CTNE4	$ 2.28	(T)
- 45 Mbps port	CTNE4	2.28	
- 155 Mbps port	CTNE4	2.28	
• Sustained Cell Rate Service, per 1 Mbps Increment of total bandwidth			
- 1.544 Mbps port	CTNC4	34.22	
- 45 Mbps port	CTNC4	34.22	
- 155 Mbps port	CTNC4	34.22	(M)

Certain material on this page formerly appeared on Page 8-275.

8. ADVANCED COMMUNICATIONS NETWORKS

8.5 ATM CELL RELAY SERVICE (T)(M)

8.5.5 RATES AND CHARGES

E. 48 Months

3. Cell Transfer (Cont'd) (T)

	USOC	MONTHLY RATE
• Sustained Cell Rate Service, per 1.544 Mbps Increment of total bandwidth		
- 45 Mbps port	CTNF4	$ 41.06
- 155 Mbps port	CTNF4	41.06
• Sustained Cell Rate Service, Maximum Burst Size, per VCC		
- 32 Cells	CTSA4	–
- 100 Cells[1]	CTSB4	91.25
- 200 Cells[1]	CTSC4	182.50

[1] The Maximum Burst Size of 200 Cells requires the customer to purchase a minimum of 4 Mbps of Sustained Cell Rate Service for each VCC. (M)

Certain material on this page formerly appeared on Pages 8-275 and 8-276.

8. ADVANCED COMMUNICATIONS NETWORKS

8.5 ATM CELL RELAY SERVICE (T)(M)

8.5.5 RATES AND CHARGES

E. 48 Months

3. Cell Transfer (Cont'd) (T)

	USOC	MONTHLY RATE	
• Unspecified Bit Rate Service, per 64 kbps Increment of total bandwidth			
- 1.544 Mbps port	CTUE4	$ 0.73	(T)
- 45 Mbps port	CTUE4	0.73	
- 155 Mbps port	CTUE4	0.73	
• Unspecified Bit Rate Service, per 1 Mbps Increment of total bandwidth			
- 1.544 Mbps port	CTUC4	10.95	
- 45 Mbps port	CTUC4	10.95	
- 155 Mbps port	CTUC4	10.95	(M)

Certain material on this page formerly appeared on Page 8-276.

8. ADVANCED COMMUNICATIONS NETWORKS

8.5 ATM CELL RELAY SERVICE (T)(M)
8.5.5 RATES AND CHARGES (T)

E. 48 Months (Cont'd) (T)

	USOC	NONRECURRING CHARGE	MONTHLY RATE	
4. Central Office Connecting Channel (COCC), per COCC				
- Up to 1.544 Mbps	CFNX4	$25.00	$ 0.59	
- Up to 45 or 155 Mbps	CFNX4	30.00	11.41	(M)

Certain material on this page formerly appeared on Page 8-276.

8. ADVANCED COMMUNICATIONS NETWORKS

8.5 ATM CELL RELAY SERVICE (T)(M)
8.5.5 RATES AND CHARGES (Cont'd) (T)

F. 60 Months

	USOC	NONRECURRING CHARGE	MONTHLY RATE
1. Optical Access Link, per Access Link			
• 45 Mbps	N7AX5	$ 840.27	$ 639.00
• 155 Mbps	N7AX5	860.24	954.00
• 45 Mbps optioned with protection	N7AR5	1,320.00	1,080.00
• 155 Mbps optioned with protection	N7AR5	1,380.00	2,520.00

(M)

Certain material on this page formerly appeared on Page 8-277.

8. ADVANCED COMMUNICATIONS NETWORKS

8.5 ATM CELL RELAY SERVICE (T)(M)
8.5.5 RATES AND CHARGES (T)

F. 60 Months (Cont'd) (T)

	USOC	NONRECURRING CHARGE	MONTHLY RATE	
2. Stand-Alone Optical Access Link, per Access Link				
• 45 Mbps	N1AX5	$ 840.27	$ 639.00	(T)
• 155 Mbps	N1AX5	860.24	954.00	
• 45 Mbps optioned with protection	N1AR5	1,320.00	1,080.00	
• 155 Mbps optioned with protection	N1AR5	1,380.00	2,520.00	(M)

Certain material on this page formerly appeared on Page 8-277.

8. ADVANCED COMMUNICATIONS NETWORKS

8.5 ATM CELL RELAY SERVICE (T)(M)
8.5.5 RATES AND CHARGES (T)

F. 60 Months (Cont'd)

	USOC	NONRECURRING CHARGE
3. Cell Transfer		
• First VCC	NR9AV	$150.00
• Each additional VCC	NR9AW	50.00
• First VPC	NR9AX	150.00
• Each additional VPC	NR9AY	50.00
• Subsequent VCC(s) or VPC order charge, per order[1]	NR9AZ	160.00

	USOC	NONRECURRING CHARGE	MONTHLY RATE
• Fixed Rate, per Port			
- 1.544 Mbps	C3TX5	$161.45	$252.00
- 45 Mbps	C3TX5	161.45	396.00
- 155 Mbps	C3TX5	161.45	720.00

[1] In addition to the Subsequent VCC(s) or VPC order charge, the First and Each Additional VCC or VPC nonrecurring charges apply, as applicable. (M)

Certain material on this page formerly appeared on Page 8-278.

8. ADVANCED COMMUNICATIONS NETWORKS

8.5 ATM CELL RELAY SERVICE (T)(M)

8.5.5 RATES AND CHARGES

F. 60 Months

3. Cell Transfer (Cont'd) (T)

	USOC	MONTHLY RATE
• Peak Cell Rate Service, per 64 kbps Increment of total bandwidth		
- 1.544 Mbps port	CTNB5	$ 1.80
- 45 Mbps port	CTNB5	1.80
- 155 Mbps port	CTNB5	1.80
• Peak Cell Rate Service, per 75 kbps Increment of total bandwidth		
- 1.544 Mbps port	CTNJ5	2.07
- 45 Mbps port	CTNJ5	2.07
- 155 Mbps port	CTNJ5	2.07

(M)

Certain material on this page formerly appeared on Page 8-279.

8. ADVANCED COMMUNICATIONS NETWORKS

8.5 ATM CELL RELAY SERVICE (T)(M)

8.5.5 RATES AND CHARGES

F. 60 Months

3. Cell Transfer (Cont'd) (T)

	USOC	MONTHLY RATE	
• Peak Cell Rate Service, per 1 Mbps Increment of total bandwidth			
- 1.544 Mbps port	CTNA5	$27.00	(T)
- 45 Mbps port	CTNA5	27.00	
- 155 Mbps port	CTNA5	27.00	
• Peak Cell Rate Service, per 1.544 Mbps Increment of total bandwidth			
- 45 Mbps port	CTND5	36.00	(T)
- 155 Mbps port	CTND5	36.00	(M)

Certain material on this page formerly appeared on Pages 8-279 and 8-280.

8. ADVANCED COMMUNICATIONS NETWORKS

8.5 ATM CELL RELAY SERVICE (T)(M)

8.5.5 RATES AND CHARGES

F. 60 Months

3. Cell Transfer (Cont'd) (T)

	USOC	MONTHLY RATE	
• Peak Cell Rate Service, per 1.787 Mbps Increment of total bandwidth			
- 45 Mbps port	CTNK5	$ 41.85	(T)
- 155 Mbps port	CTNK5	41.85	
• Peak Cell Rate Service, per 40.7 Mbps Increment of total bandwidth			
- 45 Mbps port	CTNG5	945.00	
- 155 Mbps port	CTNG5	945.00	(M)

Certain material on this page formerly appeared on Page 8-280.

8. ADVANCED COMMUNICATIONS NETWORKS

8.5 ATM CELL RELAY SERVICE (T)(M)

8.5.5 RATES AND CHARGES

F. 60 Months

3. Cell Transfer (Cont'd) (T)

	USOC	MONTHLY RATE	
• Peak Cell Rate Service, per 149 Mbps Increment of total bandwidth			
- 155 Mbps port	CTNH5	$3,420.00	(T)(M)

Certain material on this page formerly appeared on Page 8-280.

8. ADVANCED COMMUNICATIONS NETWORKS

8.5 ATM CELL RELAY SERVICE (T)(M)

8.5.5 RATES AND CHARGES

F. 60 Months

3. Cell Transfer (Cont'd) (T)

	USOC	MONTHLY RATE	
• Sustained Cell Rate Service, per 64 kbps Increment of total bandwidth			
- 1.544 Mbps port	CTNE5	$ 2.25	(T)
- 45 Mbps port	CTNE5	2.25	
- 155 Mbps port	CTNE5	2.25	
• Sustained Cell Rate Service, per 1 Mbps Increment of total bandwidth			
- 1.544 Mbps port	CTNC5	33.75	
- 45 Mbps port	CTNC5	33.75	
- 155 Mbps port	CTNC5	33.75	(M)

Certain material on this page formerly appeared on Page 8-280.

8. ADVANCED COMMUNICATIONS NETWORKS

8.5 ATM CELL RELAY SERVICE (T)(M)

8.5.5 RATES AND CHARGES

F. 60 Months

3. Cell Transfer (Cont'd) (T)

	USOC	MONTHLY RATE	
• Sustained Cell Rate Service, per 1.544 Mbps Increment of total bandwidth			
- 45 Mbps port	CTNF5	$ 40.50	(T)
- 155 Mbps port	CTNF5	40.50	
• Sustained Cell Rate Service, Maximum Burst Size, per 64 VCC			
- 32 Cells	CTSA5	–	
- 100 Cells[1]	CTSB5	90.00	
- 200 Cells[1]	CTSC5	180.00	

[1] The Maximum Burst Size of 200 Cells requires the customer to purchase a minimum of 4 Mbps of Sustained Cell Rate Service for each VCC. (M)

Certain material on this page formerly appeared on Page 8-281.

8. ADVANCED COMMUNICATIONS NETWORKS

8.5 ATM CELL RELAY SERVICE (T)(M)

8.5.5 RATES AND CHARGES

F. 60 Months

3. Cell Transfer (Cont'd) (T)

	USOC	MONTHLY RATE	
• Unspecified Bit Rate Service, per 64 kbps Increment of total bandwidth			
- 1.544 Mbps port	CTUE5	$ 0.72	(T)
- 45 Mbps port	CTUE5	0.72	
- 155 Mbps port	CTUE5	0.72	
• Unspecified Bit Rate Service, per 1 Mbps Increment of total bandwidth			
- 1.544 Mbps port	CTUC5	10.80	
- 45 Mbps port	CTUC5	10.80	
- 155 Mbps port	CTUC5	10.80	(M)

Certain material on this page formerly appeared on Page 8-281.

8. ADVANCED COMMUNICATIONS NETWORKS

8.5 ATM CELL RELAY SERVICE (T)(M)
8.5.5 RATES AND CHARGES (T)

F. 60 Months (Cont'd)

	USOC	NONRECURRING CHARGE	MONTHLY RATE	
4. Central Office Connecting Channel (COCC), per COCC				
- Up to 1.544 Mbps	CFNX5	$25.00	$ 0.59	
- Up to 45 or 155 Mbps	CFNX5	30.00	11.25	(M)

Certain material on this page formerly appeared on Page 8-281.

8. ADVANCED COMMUNICATIONS NETWORKS

8.5 ATM CELL RELAY SERVICE (T)(M)
8.5.5 RATES AND CHARGES (Cont'd) (T)

G. 72 Months

	USOC	NONRECURRING CHARGE	MONTHLY RATE
1. Optical Access Link, per Access Link			
• 45 Mbps	N7AX6	$ 840.27	$ 639.00
• 155 Mbps	N7AX6	860.24	954.00
• 45 Mbps optioned with protection	N7AR6	1,320.00	1,080.00
• 155 Mbps optioned with protection	N7AR6	1,380.00	2,520.00

(M)

Certain material on this page formerly appeared on Page 8-282.

8. ADVANCED COMMUNICATIONS NETWORKS

8.5 ATM CELL RELAY SERVICE (T)(M)
8.5.5 RATES AND CHARGES (Cont'd) (T)

G. 72 Months

	USOC	NONRECURRING CHARGE	MONTHLY RATE	
2. Stand-Alone Optical Access Link, per Access Link				
• 45 Mbps	N1AX6	$ 840.27	$ 639.00	(T)
• 155 Mbps	N1AX6	860.24	954.00	
• 45 Mbps optioned with protection	N1AR6	1,320.00	1,080.00	
• 155 Mbps optioned with protection	N1AR6	1,380.00	2,520.00	(M)

Certain material on this page formerly appeared on Page 8-282.

8. ADVANCED COMMUNICATIONS NETWORKS

8.5 ATM CELL RELAY SERVICE (T)(M)
8.5.5 RATES AND CHARGES
G. 72 Months (Cont'd) (T)

	USOC	NONRECURRING CHARGE
3. Cell Transfer		
• First VCC	NR9AV	$150.00
• Each additional VCC	NR9AW	50.00
• First VPC	NR9AX	150.00
• Each additional VPC	NR9AY	50.00
• Subsequent VCC(s) or VPC order charge, per order[1]	NR9AZ	160.00

	USOC	NONRECURRING CHARGE	MONTHLY RATE
• Fixed Rate, per Port			
- 1.544 Mbps	C3TX6	$161.45	$252.00
- 45 Mbps	C3TX6	161.45	396.00
- 155 Mbps	C3TX6	161.45	720.00
Vintage[2]			396.00

[1] In addition to the Subsequent VCC(s) or VPC order charge, the First and Each Additional VCC or VPC nonrecurring charges apply, as applicable.

[2] Vintage rate in effect 10/2/95 through 3/14/97. (M)

Certain material on this page formerly appeared on Page 8-283.

8. ADVANCED COMMUNICATIONS NETWORKS

8.5 ATM CELL RELAY SERVICE (T)(M)

8.5.5 RATES AND CHARGES

G. 72 Months

3. Cell Transfer (Cont'd) (T)

	USOC	MONTHLY RATE
• Peak Cell Rate Service, per 64 kbps Increment of total bandwidth		
- 1.544 Mbps port	CTNB6	$ 1.80
- 45 Mbps port	CTNB6	1.80
- 155 Mbps port	CTNB6	1.80
• Peak Cell Rate Service, per 75 kbps Increment of total bandwidth		
- 1.544 Mbps port	CTNJ6	2.07
- 45 Mbps port	CTNJ6	2.07
- 155 Mbps port	CTNJ6	2.07

(M)

Certain material on this page formerly appeared on Page 8-284.

8. ADVANCED COMMUNICATIONS NETWORKS

8.5 ATM CELL RELAY SERVICE (T)(M)

8.5.5 RATES AND CHARGES

G. 72 Months

3. Cell Transfer (Cont'd) (T)

	USOC	MONTHLY RATE	
• Peak Cell Rate Service, per 1 Mbps Increment of total bandwidth			
- 1.544 Mbps port	CTNA6	$27.00	(T)
- 45 Mbps port	CTNA6	27.00	
- 155 Mbps port	CTNA6	27.00	
• Peak Cell Rate Service, per 1.544 Mbps Increment of total bandwidth			
- 45 Mbps port	CTND6	36.00	(T)
- 155 Mbps port	CTND6	36.00	(M)

Certain material on this page formerly appeared on Pages 8-284 and 8-285.

8. ADVANCED COMMUNICATIONS NETWORKS

8.5 ATM CELL RELAY SERVICE (T)(M)

8.5.5 RATES AND CHARGES

F. 60 Months

3. Cell Transfer (Cont'd) (T)

	USOC	MONTHLY RATE	
• Peak Cell Rate Service, per 1.787 Mbps Increment of total bandwidth			
- 45 Mbps port	CTNK6	$41.85	(T)
- 155 Mbps port	CTNK6	41.85	
• Peak Cell Rate Service, per 40.7 Mbps Increment of total bandwidth			
- 45 Mbps port	CTNG6	945.00	
- 155 Mbps port	CTNG6	945.00	(M)

Certain material on this page formerly appeared on Page 8-285.

8. ADVANCED COMMUNICATIONS NETWORKS

8.5 ATM CELL RELAY SERVICE (T)(M)

8.5.5 RATES AND CHARGES

F. 60 Months

3. Cell Transfer (Cont'd) (T)

	USOC	MONTHLY RATE	
• Peak Cell Rate Service, per 149 Mbps Increment of total bandwidth			
- 155 Mbps port	CTNH6	$3,420.00	(T)(M)

Certain material on this page formerly appeared on Page 8-285.

8. ADVANCED COMMUNICATIONS NETWORKS

8.5 ATM CELL RELAY SERVICE (T)(M)

8.5.5 RATES AND CHARGES

F. 60 Months

3. Cell Transfer (Cont'd) (T)

	USOC	MONTHLY RATE	
• Sustained Cell Rate Service, per 64 kbps Increment of total bandwidth			
- 1.544 Mbps port	CTNE6	$ 2.25	(T)
- 45 Mbps port	CTNE6	2.25	
- 155 Mbps port	CTNE6	2.25	
• Sustained Cell Rate Service, per 1 Mbps Increment of total bandwidth			
- 1.544 Mbps port	CTNC6	33.75	
- 45 Mbps port	CTNC6	33.75	
- 155 Mbps port	CTNC6	33.75	(M)

Certain material on this page formerly appeared on Page 8-285.

8. ADVANCED COMMUNICATIONS NETWORKS

8.5 ATM CELL RELAY SERVICE (T)(M)

8.5.5 RATES AND CHARGES

F. 60 Months

3. Cell Transfer (Cont'd) (T)

	USOC	MONTHLY RATE
• Sustained Cell Rate Service, per 1.544 Mbps Increment of total bandwidth		
- 45 Mbps port	CTNF6	$ 40.50
- 155 Mbps port	CTNF6	40.50
• Sustained Cell Rate Service, Maximum Burst Size, per VCC		
- 32 Cells	CTSA6	–
- 100 Cells[1]	CTSB6	90.00
- 200 Cells[1]	CTSC6	180.00

[1] The Maximum Burst Size of 200 Cells requires the customer to purchase a minimum of 4 Mbps of Sustained Cell Rate Service for each VCC. (M)

Certain material on this page formerly appeared on Page 8-286.

8. ADVANCED COMMUNICATIONS NETWORKS

8.5 ATM CELL RELAY SERVICE (T)(M)

8.5.5 RATES AND CHARGES

F. 60 Months

3. Cell Transfer (Cont'd) (T)

	USOC	MONTHLY RATE	
• Unspecified Bit Rate Service, per 64 kbps Increment of total bandwidth			
- 1.544 Mbps port	CTUE6	$ 0.72	(T)
- 45 Mbps port	CTUE6	0.72	
- 155 Mbps port	CTUE6	0.72	
• Unspecified Bit Rate Service, per 1 Mbps Increment of total bandwidth			
- 1.544 Mbps port	CTUC6	10.80	
- 45 Mbps port	CTUC6	10.80	
- 155 Mbps port	CTUC6	10.80	(M)

Certain material on this page formerly appeared on Page 8-286.

8. ADVANCED COMMUNICATIONS NETWORKS

8.5 ATM CELL RELAY SERVICE (T)(M)
8.5.5 RATES AND CHARGES (T)

F. 60 Months (Cont'd) (T)

	USOC	NONRECURRING CHARGE	MONTHLY RATE	
4. Central Office Connecting Channel (COCC), per COCC				
- Up to 1.544 Mbps	CFNX6	$25.00	$ 0.59	(T)
- Up to 45 or 155 Mbps	CFNX6	30.00	11.25	(M)

Certain material on this page formerly appeared on Page 8-286.

8. ADVANCED COMMUNICATIONS NETWORKS

8.5 ATM CELL RELAY SERVICE (T)(M)
8.5.5 RATES AND CHARGES (Cont'd) (T)

H. 84 Months

	USOC	NONRECURRING CHARGE	MONTHLY RATE	
1. Optical Access Link, per Access Link				
• 45 Mbps	N7AX7	$ 840.27	$ 639.00	
• 155 Mbps	N7AX7	860.24	954.00	
• 45 Mbps optioned with protection	N7AR7	1,320.00	1,080.00	
• 155 Mbps optioned with protection	N7AR7	1,380.00	2,520.00	(M)

Certain material on this page formerly appeared on Page 8-287.

8. ADVANCED COMMUNICATIONS NETWORKS

8.5 ATM CELL RELAY SERVICE (T)(M)
8.5.5 RATES AND CHARGES (Cont'd) (T)

H. 84 Months

	USOC	NONRECURRING CHARGE	MONTHLY RATE	
2. Stand-Alone Optical Access Link, per Access Link				
• 45 Mbps	N1AX7	840.27	$ 639.00	(T)
• 155 Mbps	N1AX7	860.24	954.00	
• 45 Mbps optioned with protection	N1AR7	1,320.00	1,080.00	
• 155 Mbps optioned with protection	N1AR7	1,380.00	2,520.00	(M)

Certain material on this page formerly appeared on Page 8-287.

8. ADVANCED COMMUNICATIONS NETWORKS

8.5 ATM CELL RELAY SERVICE (T)(M)
8.5.5 RATES AND CHARGES (T)

H. 84 Months (Cont'd)

	USOC	NONRECURRING CHARGE
3. Cell Transfer		
• First VCC	NR9AV	$150.00
• Each additional VCC	NR9AW	50.00
• First VPC	NR9AX	150.00
• Each additional VPC	NR9AY	50.00
• Subsequent VCC(s) or VPC order charge, per order[1]	NR9AZ	160.00

	USOC	NONRECURRING CHARGE	MONTHLY RATE
• Fixed Rate, per Port			
- 1.544 Mbps	C3TX7	$161.45	$252.00
- 45 Mbps	C3TX7	161.45	396.00
- 155 Mbps	C3TX7	161.45	720.00
Vintage[2]			396.00

[1] In addition to the Subsequent VCC(s) or VPC order charge, the First and Each Additional VCC or VPC nonrecurring charges apply, as applicable. (M)

[2] Vintage rate in effect 10/2/95 through 3/14/97.

Certain material on this page formerly appeared on Page 8-288.

8. ADVANCED COMMUNICATIONS NETWORKS

8.5 ATM CELL RELAY SERVICE (T)(M)

8.5.5 RATES AND CHARGES

H. 84 Months

3. Cell Transfer (Cont'd) (T)

	USOC	MONTHLY RATE
• Peak Cell Rate Service, per 64 kbps Increment of total bandwidth		
- 1.544 Mbps port	CTNB7	$ 1.80
- 45 Mbps port	CTNB7	1.80
- 155 Mbps port	CTNB7	1.80
• Peak Cell Rate Service, per 75 kbps Increment of total bandwidth		
- 1.544 Mbps port	CTNJ7	2.07
- 45 Mbps port	CTNJ7	2.07
- 155 Mbps port	CTNJ7	2.07

(M)

Certain material on this page formerly appeared on Page 8-289.

8. ADVANCED COMMUNICATIONS NETWORKS

8.5 ATM CELL RELAY SERVICE (T)(M)

8.5.5 RATES AND CHARGES

H. 84 Months

3. Cell Transfer (Cont'd) (T)

	USOC	MONTHLY RATE	
• Peak Cell Rate Service, per 1 Mbps Increment of total bandwidth			
- 1.544 Mbps port	CTNA7	$27.00	(T)
- 45 Mbps port	CTNA7	27.00	
- 155 Mbps port	CTNA7	27.00	
• Peak Cell Rate Service, per 1.544 Mbps Increment of total bandwidth			
- 45 Mbps port	CTND7	36.00	(T)
- 155 Mbps port	CTND7	36.00	(M)

Certain material on this page formerly appeared on Pages 8-289 and 8-290.

8. ADVANCED COMMUNICATIONS NETWORKS

8.5 ATM CELL RELAY SERVICE (T)(M)

8.5.5 RATES AND CHARGES

H. 84 Months

3. Cell Transfer (Cont'd) (T)

	USOC	MONTHLY RATE	
• Peak Cell Rate Service, per 1.787 Mbps Increment of total bandwidth			
- 45 Mbps port	CTNK7	$ 41.85	(T)
- 155 Mbps port	CTNK7	41.85	
• Peak Cell Rate Service, per 40.7 Mbps Increment of total bandwidth			
- 45 Mbps port	CTNG7	945.00	
- 155 Mbps port	CTNG7	945.00	(M)

Certain material on this page formerly appeared on Page 8-290.

8. ADVANCED COMMUNICATIONS NETWORKS

8.5 ATM CELL RELAY SERVICE (T)(M)

8.5.5 RATES AND CHARGES

H. 84 Months

3. Cell Transfer (Cont'd) (T)

	USOC	MONTHLY RATE	
• Peak Cell Rate Service, per 149 Mbps Increment of total bandwidth			
- 155 Mbps port	CTNH7	$3,420.00	(T)(M)

Certain material on this page formerly appeared on Page 8-290.

8. ADVANCED COMMUNICATIONS NETWORKS

8.5 ATM CELL RELAY SERVICE (T)(M)

8.5.5 RATES AND CHARGES

H. 84 Months

3. Cell Transfer (Cont'd) (T)

	USOC	MONTHLY RATE	
• Sustained Cell Rate Service, per 64 kbps Increment of total bandwidth			
- 1.544 Mbps port	CTNE7	$ 2.25	(T)
- 45 Mbps port	CTNE7	2.25	
- 155 Mbps port	CTNE7	2.25	
• Sustained Cell Rate Service, per 1 Mbps Increment of total bandwidth			
- 1.544 Mbps port	CTNC7	33.75	
- 45 Mbps port	CTNC7	33.75	
- 155 Mbps port	CTNC7	33.75	(M)

Certain material on this page formerly appeared on Page 8-290.

8. ADVANCED COMMUNICATIONS NETWORKS

8.5 ATM CELL RELAY SERVICE (T)(M)

8.5.5 RATES AND CHARGES

H. 84 Months

3. Cell Transfer (Cont'd) (T)

	USOC	MONTHLY RATE
• Sustained Cell Rate Service, per 1.544 Mbps Increment of total bandwidth		
- 45 Mbps port	CTNF7	$ 40.50
- 155 Mbps port	CTNF7	40.50
• Sustained Cell Rate Service, Maximum Burst Size, per VCC		
- 32 Cells	CTSA7	–
- 100 Cells[1]	CTSB7	90.00
- 200 Cells[1]	CTSC7	180.00

[1] The Maximum Burst Size of 200 Cells requires the customer to purchase a minimum of 4 Mbps of Sustained Cell Rate Service for each VCC. (M)

Certain material on this page formerly appeared on Page 8-291.

8. ADVANCED COMMUNICATIONS NETWORKS

8.5 ATM CELL RELAY SERVICE (T)(M)

8.5.5 RATES AND CHARGES

H. 84 Months

3. Cell Transfer (Cont'd) (T)

	USOC	MONTHLY RATE	
• Unspecified Bit Rate Service, per 64 kbps Increment of total bandwidth			
- 1.544 Mbps port	CTUE7	$ 0.72	(T)
- 45 Mbps port	CTUE7	0.72	
- 155 Mbps port	CTUE7	0.72	
• Unspecified Bit Rate Service, per 1 Mbps Increment of total bandwidth			
- 1.544 Mbps port	CTUC7	10.80	
- 45 Mbps port	CTUC7	10.80	
- 155 Mbps port	CTUC7	10.80	(M)

Certain material on this page formerly appeared on Page 8-291.

8. ADVANCED COMMUNICATIONS NETWORKS

8.5 ATM CELL RELAY SERVICE (T)(M)
8.5.5 RATES AND CHARGES
H. 84 Months (Cont'd) (T)

	USOC	NONRECURRING CHARGE	MONTHLY RATE	
4. Central Office Connecting Channel (COCC), per COCC				
- Up to 1.544 Mbps	CFNX7	$25.00	$ 0.59	
- Up to 45 or 155 Mbps	CFNX7	30.00	11.25	(M)

Certain material on this page formerly appeared on Page 8-291.

8. ADVANCED COMMUNICATIONS NETWORKS

(T)(M)

8.6 LOCAL AREA NETWORK SWITCHING SERVICE

8.6.1 GENERAL

(T)

A. Description

Local Area Network (LAN) Switching Service (LSS) is a transport service designed to interconnect LSS interfaces between customer-designated premises. LSS provides a specific amount of bandwidth over the Company's ACS Network using ATM technology. LSS supports both point-to-point and multipoint interconnectivity of Ethernet LANs (i.e., a data rate of 10 Mbps), Fast Ethernet LANs (i.e., a data rate of 45 Mbps or 100 Mbps) or Token Ring LANs (i.e., a data rate of 16 Mbps).

LSS data is transported over 45 Mbps and 155 Mbps fiber optic facilities using ATM technology. Company wire centers equipped with ATM technology are identified in the National Exchange Carrier Association Tariff, F.C.C. No. 4.

LSS connectivity is established by provisioning permanent virtual circuits through the Company's ATM technology. The customer may specify an unprotected LSS transport option which provides a single fiber pair from the Company's ATM equipped wire center to the network interface at the customer-designated premises or a protected LSS transport option which provides a standby fiber pair that is automatically activated if the first fiber path fails. An LSS customer may request Special Facilities Routing as set forth in 11.1.A.1., following.

LSS also supports the provisioning of ATM connectivity between two separate LSS networks and/or between LSS and ATM CRS locations. The connection between the LSS/LSS or LSS/ATM CRS locations can be an ATM CRS virtual channel connection (VCC). VCCs for the LSS/LSS or LSS to ATM CRS option are only available as Unspecified Bit Rate Service (UBRS) for Monthly or fixed period service rate plans of 12, 36 and 60 Months. The VCC and UBRS rate regulations and rates are as set forth in 8.5.2 and 8.5.5., following. (T) (M)

Certain material on this page formerly appeared on Page 8-40.

8. ADVANCED COMMUNICATIONS NETWORKS

8.6 LOCAL AREA NETWORK SWITCHING SERVICE (T)(M)
8.6.1 GENERAL (Cont'd)

B. Service Elements (T)

1. Network Interface

The Company network interface is the point of interconnection between Company communications facilities and terminal equipment or other customer-provided facilities. The network interface is the point of demarcation on the customer's premises where the Company's responsibility for the provision of LSS ends.

Technical Specifications for LSS are delineated in Qwest Corporation Technical Publication PUB 77396.

2. LAN Link (T)

The LAN Link provides the customer access to the Company's network supporting LSS. A LAN Link includes an NI and the related fiber optic facility. A customer may select a 16 Mbps LAN Link for Token Ring, or a 10 Mbps Ethernet, 45 Mbps Fast Ethernet Lite, or 100 Mbps Fast Ethernet LAN Links. A customer may order Unprotected or Protected LAN Links. Unprotected and Protected LAN Links both provide a dedicated fiber path between the Network Interface and the Company's network. Unprotected LAN Links provide a single fiber path, while protected LAN Links provide a standby fiber path that is automatically activated if the first fiber path fails. An LSS customer may request Special Facilities Routing as set forth in 11.1.A.1., following. An LSS LAN Link is only available at ATM CRS Service Points. (M)

Certain material on this page formerly appeared on Pages 8-40 and 8-41.

8. ADVANCED COMMUNICATIONS NETWORKS

8.6 LOCAL AREA NETWORK SWITCHING SERVICE (T)(M)

8.6.1 GENERAL

B. Service Elements (Cont'd)

3. Remote LAN Link (T)

   A Remote LAN Link is used for LSS access where ATM technology is not available. A customer may select a 10 Mbps Ethernet, 45 Mbps Fast Ethernet, or 16 Mbps Token Ring.

4. Virtual Circuits (T)

   LSS connectivity between customer-designated premises is accomplished by provisioning LSS NIs to Permanent Virtual Circuits through the Company's ATM technology.

5. Service Point (T)

   Service Points are ATM geographic locations designated by the Company where LSS accesses the ATM technology. (M)

Certain material on this page formerly appeared on Page 8-41.

8. ADVANCED COMMUNICATIONS NETWORKS

8.6 LOCAL AREA NETWORK SWITCHING SERVICE (Cont'd) (T)(M)

8.6.2 RATE ELEMENTS

A. LAN Link (T)

A nonrecurring charge applies per LAN Link termination for each physical connection to the Company's ATM technology. The monthly rate is assessed per LAN Link based upon the speed of the LAN Link (i.e., 10 Mbps, 45 Mbps, 100 Mbps or 16 Mbps) and whether the LAN Link is protected or unprotected. (T)

B. Remote LAN Link (T)

A nonrecurring charge applies per Remote LAN Link termination for each physical connection to the Company's ATM technology. The monthly rate is assessed per Remote LAN Link based upon the speed of the Remote LAN Link (i.e., 10 Mbps, 45 Mbps, 100 Mbps or 16 Mbps). When a customer accesses LSS via a Remote LAN Link, Transport Mileage, as set forth in C., following, applies in addition to (T)
the monthly rate for the Remote LAN Link. (T)

C. Transport Mileage (T)

Transport Mileage rate category provides for the transmission facilities between an ATM-equipped wire center and a non-ATM-equipped serving wire center associated with a customer designated premises. Transport Mileage is portrayed in mileage bands. There are two elements that apply for each band, i.e., a flat rate per band and a rate per mile. Transport mileage is measured as set forth in 7.1.1, preceding. (T)(M)

Certain material on this page formerly appeared on Page 8-63.

8. ADVANCED COMMUNICATIONS NETWORKS

8.6 LOCAL AREA NETWORK SWITCHING SERVICE (Cont'd) (T)(M)

8.6.3 PRICING PLANS

A. General (T)

1. The initial order for LSS must be for a fixed service period of one, three, or five years. At the end of the initial service period, a customer may elect the month-to-month option or any of the specified fixed service periods. (T)

2. A subsequent order to add LSS LAN Links and/or Remote LAN Links to an existing fixed-period service pricing plan must be for a fixed period of one, three or five years, or for the remainder of the existing fixed-period service pricing plan, provided the remainder of the existing plan is at least the minimum period for that plan, as set forth in 8.5.4. If the remaining term is less than the associated minimum period, the minimum term for the added LAN Link and/or Remote LAN Link shall be the associated minimum period. (T)

3. A customer may access LSS via a Company-provided LAN Link or Remote LAN Link. A customer utilizing a Remote LAN Link to access LSS will incur a monthly rate and a nonrecurring charge for a Remote LAN Link, in addition to the applicable monthly rates for Transport Mileage.

B. Discontinuance of Service (T)

4. If a customer chooses to discontinue all or a portion of the service prior to the expiration of the fixed period service, Termination Liability, as set forth in 8.1.5, will apply. (T)(M)

Certain material on this page formerly appeared on Page 8-100.

8. ADVANCED COMMUNICATIONS NETWORKS

8.6 LOCAL AREA NETWORK SWITCHING SERVICE (Cont'd) (T)(M)

8.6.4 RATES AND CHARGES (T)

	USOC	NONRECURRING CHARGE	
A. LAN Links			(T)
1. Nonrecurring Charge			
• Per LAN Link termination	NRBL8	$1,500.00	(T)

	USOC	MONTHLY RATE	
2. Ethernet, 10 Mbps, without protection, per LAN Link termination			(T)
• Monthly	D5LCX	$1,400.00	
• 12 Months	DLUC1	1,330.00	
• 36 Months	DLUC3	1,190.00	
• 60 Months	DLUC5	1,120.00	
3. Ethernet, 10 Mbps, with protection, per LAN Link termination			(T)
• Monthly	D5LCP	1,700.00	
• 12 Months	DPUC1	1,615.00	
• 36 Months	DPUC3	1,445.00	
• 60 Months	DPUC5	1,360.00	(M)

Certain material on this page formerly appeared on Page 8-292.

8. ADVANCED COMMUNICATIONS NETWORKS

8.6 LOCAL AREA NETWORK SWITCHING SERVICE (T)(M)
8.6.4 RATES AND CHARGES (T)

A. LAN Links (Cont'd) (T)

	USOC	MONTHLY RATE	
4. Fast Ethernet, 45 Mbps, without protection, per LAN Link termination			(T)
• Monthly	D5L1X	$1,800.00	(T)
• 12 Months	DLU11	1,710.00	
• 36 Months	DLU13	1,530.00	
• 60 Months	DLU15	1,440.00	
5. Fast Ethernet, 45 Mbps, with protection, per LAN Link termination			(T)
• Monthly	D5L1P	2,100.00	
• 12 Months	DPU11	1,995.00	
• 36 Months	DPU13	1,785.00	
• 60 Months	DPU15	1,680.00	(M)

Certain material on this page formerly appeared on Page 8-292.

8. ADVANCED COMMUNICATIONS NETWORKS

8.6 LOCAL AREA NETWORK SWITCHING SERVICE (T)(M)
8.6.4 RATES AND CHARGES (T)

A. LAN Links (Cont'd) (T)

	USOC	MONTHLY RATE	
6. Fast Ethernet, 100 Mbps, without protection, per LAN Link termination			(T)
• Monthly	D5L2X	$2,800.00	
• 12 Months	DLU21	2,660.00	
• 36 Months	DLU23	2,380.00	
• 60 Months	DLU25	2,240.00	
7. Fast Ethernet, 100 Mbps, with protection, per LAN Link termination			(T)
• Monthly	D5L2P	3,900.00	
• 12 Months	DPU21	3,700.00	
• 36 Months	DPU23	3,300.00	
• 60 Months	DPU25	3,120.00	(M)

Certain material on this page formerly appeared on Page 8-293.

8. ADVANCED COMMUNICATIONS NETWORKS

8.6 LOCAL AREA NETWORK SWITCHING SERVICE (T)(M)
8.6.4 RATES AND CHARGES (T)

A. LAN Links (Cont'd) (T)

	USOC	MONTHLY RATE	
8. Token Ring, 16 Mbps, without protection, per LAN Link termination			(T)
• Monthly	D5LBX	$1,400.00	(T)
• 12 Months	DLUB1	1,330.00	
• 36 Months	DLUB3	1,190.00	
• 60 Months	DLUB5	1,120.00	
9. Token Ring, 16 Mbps, with protection, per LAN Link termination			(T)
• Monthly	D5LBP	1,700.00	
• 12 Months	DPUB1	1,615.00	
• 36 Months	DPUB3	1,445.00	
• 60 Months	DPUB5	1,360.00	(M)

Certain material on this page formerly appeared on Page 8-293.

8. ADVANCED COMMUNICATIONS NETWORKS

8.6 LOCAL AREA NETWORK SWITCHING SERVICE (T)(M)
8.6.4 RATES AND CHARGES (Cont'd) (T)

	USOC	NONRECURRING CHARGE	
B. Remote LAN Links			(T)
1. Nonrecurring Charge			
• Per Remote LAN Link termination	NRB6E	$1,700.00	(T)

	USOC	MONTHLY RATE	
2. Ethernet, 10 Mbps, per Remote LAN Link termination			(T)
• Monthly	RLUCM	$1,700.00	
• 12 Months	RLUC1	1,615.00	
• 36 Months	RLUC3	1,445.00	
• 60 Months	RLUC5	1,360.00	
3. Fast Ethernet, 45 Mbps, per Remote LAN Link termination			(T)
• Monthly	RLU1M	2,100.00	
• 12 Months	RLU11	1,995.00	
• 36 Months	RLU13	1,785.00	
• 60 Months	RLU15	1,680.00	
4. Token Ring, 16 Mbps, per Remote LAN Link termination			(T)
• Monthly	RLUBM	1,700.00	
• 12 Months	RLUB1	1,615.00	
• 36 Months	RLUB3	1,445.00	
• 60 Months	RLUB5	1,360.00	(M)

Certain material on this page formerly appeared on Page 8-294.

8. ADVANCED COMMUNICATIONS NETWORKS

8.6 LOCAL AREA NETWORK SWITCHING SERVICE (T)(M)
8.6.4 RATES AND CHARGES (Cont'd) (T)

C. Transport Mileage

	USOC	MONTHLY RATE	
1. Token Ring/10 Mbps Ethernet			
a. Monthly			
Mileage Bands			
• Over 0 to 8			
- Fixed	JZ3OA	$369.31	
- Per mile	JZ3OA	32.04	
• Over 8 to 25			
- Fixed	JZ3OB	371.09	
- Per mile	JZ3OB	21.97	
• Over 25 to 50			
- Fixed	JZ3OC	374.06	
- Per mile	JZ3OC	31.94	
• Over 50			
- Fixed	JZ3OD	387.13	
- Per mile	JZ3OD	36.20	(M)

Certain material on this page formerly appeared on Page 8-295.

8. ADVANCED COMMUNICATIONS NETWORKS

8.6 LOCAL AREA NETWORK SWITCHING SERVICE (T)(M)
8.6.4 RATES AND CHARGES (T)

C.1. (Cont'd)

	USOC	MONTHLY RATE
b. 12 Months		
Mileage Bands		
• Over 0 to 8		
- Fixed	JZ3XA	$350.85
- Per mile	JZ3XA	30.44
• Over 8 to 25		
- Fixed	JZ3XB	352.54
- Per mile	JZ3XB	20.87
• Over 25 to 50		
- Fixed	JZ3XC	355.36
- Per mile	JZ3XC	30.34
• Over 50		
- Fixed	JZ3XD	367.77
- Per mile	JZ3XD	34.39 (M)

Certain material on this page formerly appeared on Page 8-296.

8. ADVANCED COMMUNICATIONS NETWORKS

8.6 LOCAL AREA NETWORK SWITCHING SERVICE (T)(M)
8.6.4 RATES AND CHARGES (T)

C.1.(Cont'd)

	USOC	MONTHLY RATE	
c. 36 Months			
Mileage Bands			
• Over 0 to 8			
- Fixed	JZ3ZA	$313.92	
- Per mile	JZ3ZA	27.34	
• Over 8 to 25			
- Fixed	JZ3ZB	315.43	
- Per mile	JZ3ZB	18.68	
• Over 25 to 50			
- Fixed	JZ3ZC	317.96	
- Per mile	JZ3ZC	27.26	
• Over 50			
- Fixed	JZ3ZD	329.06	
- Per mile	JZ3ZD	30.89	(M)

Certain material on this page formerly appeared on Page 8-297.

8. ADVANCED COMMUNICATIONS NETWORKS

8.6 LOCAL AREA NETWORK SWITCHING SERVICE (T)(M)
8.6.4 RATES AND CHARGES (T)

C.1.(Cont'd)

	USOC	MONTHLY RATE
d. 60 Months		
Mileage Bands		
• Over 0 to 8		
- Fixed	JZ35A	$295.45
- Per mile	JZ35A	25.63
• Over 8 to 25		
- Fixed	JZ35B	296.88
- Per mile	JZ35B	17.58
• Over 25 to 50		
- Fixed	JZ35C	299.25
- Per mile	JZ35C	25.55
• Over 50		
- Fixed	JZ35D	309.70
- Per mile	JZ35D	28.96 (M)

Certain material on this page formerly appeared on Page 8-298.

8. ADVANCED COMMUNICATIONS NETWORKS

8.6 LOCAL AREA NETWORK SWITCHING SERVICE (T)(M)
8.6.4 RATES AND CHARGES (T)
)

C. Transport Mileage (Cont'd)

	USOC	MONTHLY RATE	
2. Fast Ethernet, 45 Mbps			
a. Monthly			
Mileage Bands			
• Over 0 to 8			
- Fixed	JZ36A	$590.90	
- Per mile	JZ36A	51.26	
• Over 8 to 25			
- Fixed	JZ36B	593.75	
- Per mile	JZ36B	35.15	
• Over 25 to 50			
- Fixed	JZ36C	598.50	
- Per mile	JZ36C	51.11	
• Over 50			
- Fixed	JZ36D	619.40	(M)
- Per mile	JZ36D	57.92	

Certain material on this page formerly appeared on Page 8-299.

8. ADVANCED COMMUNICATIONS NETWORKS

8.6 LOCAL AREA NETWORK SWITCHING SERVICE (T)(M)
8.6.4 RATES AND CHARGES (T)

C.2. (Cont'd)

	USOC	MONTHLY RATE
b. 12 Months		
Mileage Bands		
• Over 0 to 8		
- Fixed	JZ37A	$561.36
- Per mile	JZ37A	48.70
• Over 8 to 25		
- Fixed	JZ37B	564.06
- Per mile	JZ37B	33.39
• Over 25 to 50		
- Fixed	JZ37C	568.58
- Per mile	JZ37C	48.55
• Over 50		
- Fixed	JZ37D	588.43
- Per mile	JZ37D	55.02

(M)

Certain material on this page formerly appeared on Page 8-300.

8. ADVANCED COMMUNICATIONS NETWORKS

8.6 LOCAL AREA NETWORK SWITCHING SERVICE (T)(M)
8.6.4 RATES AND CHARGES (T)

C.2. (Cont'd)

	USOC	MONTHLY RATE
c. 36 Months		
Mileage Bands		
• Over 0 to 8		
- Fixed	JZ38A	$502.27
- Per mile	JZ38A	43.74
• Over 8 to 25		
- Fixed	JZ38B	504.69
- Per mile	JZ38B	29.88
• Over 25 to 50		
- Fixed	JZ38C	508.73
- Per mile	JZ38C	43.61
• Over 50		
- Fixed	JZ38D	526.49
- Per mile	JZ38D	49.42 (M)

Certain material on this page formerly appeared on Page 8-301.

8. ADVANCED COMMUNICATIONS NETWORKS

8.6 LOCAL AREA NETWORK SWITCHING SERVICE (T)(M)
8.6.4 RATES AND CHARGES (T)

C.2. (Cont'd)

	USOC	MONTHLY RATE
c. 60 Months		
Mileage Bands		
• Over 0 to 8		
- Fixed	JZ39A	$472.72
- Per mile	JZ39A	41.00
• Over 8 to 25		
- Fixed	JZ39B	475.00
- Per mile	JZ39B	28.12
• Over 25 to 50		
- Fixed	JZ39C	478.80
- Per mile	JZ39C	40.88
• Over 50		
- Fixed	JZ39D	495.52
- Per mile	JZ39D	46.33 (M)

Certain material on this page formerly appeared on Page 8-302.

8. ADVANCED COMMUNICATIONS NETWORKS

8.7 MODEM AGGREGATION SERVICE (MAS)

8.7.1 GENERAL

A. Description

Effective May 1, 2001, Modem Aggregation Service (MAS) is limited to existing customers only. After that date no new or existing customer requests will be taken. All Pricing Plan customers may retain their service until the expiration of their term. (N)

The Company's Modem Aggregation Service (MAS) enables customers to subscribe to the use of modems located within designated Company local calling areas.

MAS shall not be used to provide originating switched voice traffic using internet technologies. When the Company determines that the service is being used to originate switched voice traffic, the customer will be given 30 days to discontinue the unauthorized use. During this 30-day period the customer will be given the option to purchase an applicable switched access product. Failure to discontinue the aforementioned use of MAS will result in its disconnection and in the application of appropriate TLA charges.

For a given local calling area, the service provides to the MAS customer a dial-in phone number and a customer-specified number of MAS ports. The end users of a MAS customer can place any combination of modem (analog) calls and/or ISDN (digital) calls to the assigned MAS phone number within the local calling area, up to and including the subscribed-to number of MAS ports. End-user calls in excess of the subscribed number of MAS ports will receive a subscriber busy signal.

Once the call is connected, the end-user PPP (Point to Point Protocol) traffic is delivered to the MAS customer location over a L2TP (Layer 2 Tunneling Protocol) tunnel using standard Frame Relay Service or ATM Cell Relay Service where these services are available. End user traffic from multiple Company local calling areas can be aggregated onto a single Frame Relay or ATM PVC (Permanent Virtual Circuit).

8. ADVANCED COMMUNICATIONS NETWORKS

8.7 MODEM AGGREGATION SERVICE (MAS) (T)(M)

8.7.1 GENERAL (T)

A. Description (Cont'd)

MAS requires the use of customer provided equipment L2TP Network Service (LNS) located at the customer's premise to interface with the end user modem traffic that is delivered over the Frame Relay Service or ATM Cell Relay Service to the customer premise. The customer must purchase either Frame Relay Service or ATM Cell Relay Service in order to connect their network to the Central Office based MAS modems. Availability of MAS is limited to those wire centers where MAS and Frame Relay Service or ATM Cell Relay Service is available. The locations designated by the Company are listed in the National Exchange Carrier Association Tariff FCC No. 4. (T)

MAS does not guarantee or warranty the speed or success rate which end users will realize when attempting to connect to the service. Connect speeds and connection success rates vary widely across end user local loops and equipment.

The customer must purchase and install equipment at their premise in order to terminate the end user calls and route them to their end destination. Technical Specifications for MAS are delineated in Qwest Corporation Technical Publication PUB 77402.

MAS customers will receive graphical daily usage reports delivered via e-mail to one e-mail address specified by the customer of record. (M)

Certain material on this page formerly appeared on Page 8-304.

8. ADVANCED COMMUNICATIONS NETWORKS

8.7 MODEM AGGREGATION SERVICE (MAS) (Cont'd) (T)(M)

8.7.2 RATE ELEMENTS

A. MAS Recurring Charges (T)

A monthly rate will be applied based on the number of modems to which the customer subscribes. MAS modems are available in blocks of 10. The charges do not include the Frame Relay Service or ATM Cell Relay Service access link, port charges, or bandwidth. Frame Relay or ATM Cell Relay Services are purchased as set forth in Section 8, preceding. (T)

B. MAS Nonrecurring Charges (T)

A nonrecurring telephone number charge applies per telephone number when the customer changes their existing telephone number or orders a new MAS telephone number. An order change charge initial or subsequent applies per service order. Changes are only allowed in increments of 10. (T)(M)

Certain material on this page formerly appeared on Page 8-305.

8. ADVANCED COMMUNICATIONS NETWORKS

8.7 MODEM AGGREGATION SERVICE (MAS)

8.7.3 PRICING PLANS

Effective May 1, 2001, Modem Aggregation Service (MAS) is limited to existing customers only. After that date no new customer requests will be taken. All Pricing Plan customers may retain their service until the expiration of their term. On December 6, 2000 Pricing Plans of 36 and 60 months were Grandfathered to existing customers. Minimum Service Periods and Termination Liability apply. (C)

MAS may be ordered at the customer's option on a month-to-month basis or under a Fixed Period Service Rate Plan of 12 months. The optional rate plans give the MAS customer the assurance of no Company-initiated increases in rates during the fixed period. The minimum service period for Fixed Period Service Rate is 12 months as set forth in Section 5, preceding.

When customers with Intrastate MAS existing prior to April 4, 2000 migrate to the MAS offered in this Tariff at the same address of record a nonrecurring charge will not apply and applicable TLA will be waived.

8. ADVANCED COMMUNICATIONS NETWORKS

8.7 MODEM AGGREGATION SERVICE (MAS) (Cont'd)

8.7.4 RATES AND CHARGES

This service is Grandfathered as set forth in 8.7.1, preceding. (C)

A. MAS Recurring Charges

	USOC	MONTHLY RATE
1. 1 to 20 Blocks, per Block		
• Monthly	MBLB2	$650.00
• 12 Months	MBLB2	450.00
• 36 Months	MBLB2	430.00
• 60 Months	MBLB2	400.00
2. 21 to 200 Blocks, per Block		
• Monthly	MBLB2	600.00
• 12 Months	MBLB2	430.00
• 36 Months	MBLB2	400.00
• 60 Months	MBLB2	380.00
3. 201 Blocks and Above, per Block		
• Monthly	MBLB2	550.00
• 12 Months	MBLB2	360.00
• 36 Months	MBLB2	340.00
• 60 Months	MBLB2	320.00

8. ADVANCED COMMUNICATIONS NETWORKS

8.7 MODEM AGGREGATION SERVICE (MAS) (T)(M)
8.7.4 RATES AND CHARGES (Cont'd) (T)

	USOC	NONRECURRING CHARGE	
B. MAS Nonrecurring Charges,			(T)
1. MAS Telephone Number Charge, per telephone number	REALC	$200.00	
2. MAS order charge, initial and subsequent, per service order	REALP	40.00	(T) (M)

Certain material on this page formerly appeared on Page 8-310.